National Park Service

Manual of Instruction for the Safe Use of Reproduction Breech-Loading Carbine and Rifle in Interpretive Demonstrations

TABLE OF CONTENTS

	Page
Part I: Introduction	1
Part II: Nomenclature	2
Part III: Inspection and Maintenance	4
Part IV: Drill	6
Part V: Misfire Procedures	29
Part VI: Laboratory	31
Part VII: Demonstration Critique	32
Part VIII: Competency Examination	33
Bibliography	34

PART I - INTRODUCTION

This manual sets forth the procedures that must be followed by persons demonstrating single-shot breechloading carbines and rifles to the public in areas administered by the National Park Service (NPS). It also provides instruction on proper maintenance, inspection, and repair procedures. This manual must be used in conjunction with the service wide standards for Historic Weapons Firing Demonstrations (NPS-6 Guidelines for Interpretation).

The information below largely comes from primary sources of the period during which the weapons described were used. Several generations of NPS historic weapons personnel have modified these original texts in order to improve demonstrator and visitor safety, make the original texts more comprehensible and to incorporate knowledge gained from years of actually using these weapons in the field.

The Park's Certified Historic Weapons Program Supervisor is responsible for the training and safety of the demonstrators, as well as the safety of the visitors. The following criteria will help determine when a demonstrator has been adequately trained.

THE SHARPS CARBINE

This manual mainly deals with the use and care of reproduction Model 1859 and Model 1863 **Sharps carbines**, which were the predominant carbine used during the American Civil War and are by far the most popular reprodction cavalry arm used today.

Although the Shaprs finished behind the Smith, Maynard, and Burnside carbines in trials conducted in 1860, it had a leg up on the competition at the outbreak of the Civil War beacuse the Sharps Rifle Manufacturing Company was the only carbine producer geared up for mass production at that time. The ever growing need for more cavalry wespons and improvements made in the Model 1863 version kept the Sharps in constant demand throughout the war.

There were several other carbines in use during the war. The repeating Spencer carbine is described in its own manual. The other carbines pictured on the following pages fired brass cartridges. The following drill and procedures will have some relevance to other carbines, but additional research will be required for their use in National Park Service demonstrations.

OTHER PERCUSSION CARBINES

The **Burnside carbine** was third most used weapon of its type during the Civil War. Like the Shraps, the breech block of the Burnside carbine drops down when the trigger guard is moved forward. This allowed the brass cartrdige to be placed in the block. The round goes into action when the trigger guard is pulled back. The Burnside carbine was heavily used by Union cavalry in the Western Theater.

The **Smith carbine** was the next most used carbine after the Burnside. The action is opened by depressing a lever forward of the trigger. The cartridge is iserted directly into the bore and then the barrel raised to close the action. This weapons was the simplest and easiest to manitain of all Civil War carbines.

The barrel of the **Gallagher carbine** slides forward and then angles down when the trigger guard is moved forward. This design was meant to make extraction of the empty brass caes easier. Unfortunately, the main complaint against this weapon was the difficulty in removing spent casings.

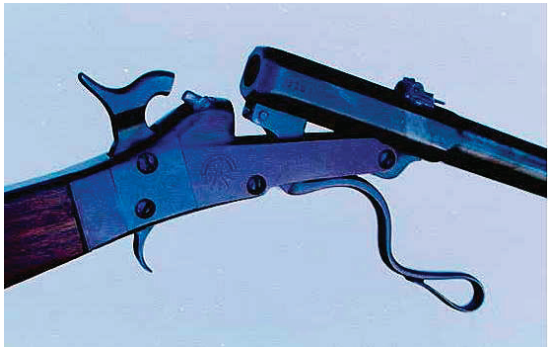

The **Maynard carbine** functions in nearly the same way as the Gallagher without the extraction problems. This weapon was considered one of the most reliable carbines used during the Civil War.

PART II - NOMENCLATURE

The following list corresponds to the diagram on the next page.

2	Receiver lever pin
3	Lever Pin Plunger Spring Screw
4	Lever Pin Plunger
5	Lever Pin Plunger Spring
6	Front Tang Screw
7	Rear Tang Screw
8	Saddle Ring Bar Screw
9	Front Lock Plate Screw
10	Breech Block, Complete, Blk, Pwdr
11	Breech Block Flange, Blk, Pwdr
12	Nipple, Blk, Pwdr
13	Breech Block Vent Clean-out Screw
14	Link to Block Screw
15	Link
16	Lever to Link Screw
17	Breech Block Opening Lever
18	Trigger Plate
19	Trigger Lock, Blk, Pwdr
20	Trigger Lock Screw
21	Trigger Lock Plate
22	Trigger Lock Plate Screw
23	Trigger
24	Trigger Screw
25	Trigger Plate Screw
26	Butt Plate Screw Top
27	Lockplate
28	Hammer
31	Tumbler Stirrup Screw
32	Bridle
33	Bridle Screw
34	Sear
35	Hammer Screw
36	Mainspring
37	Mainspring Retainer Screw
37a	Side Plate Assembly
38/1	Barrel Round Carbine, Blk,Pwdr.
38/2	Barrel Round Rifle, Blk, Pwdr
38/3	Barrel Octagonal Rifle, Blk, Pwdr
39	Chrome Chamber
40	Fr, Sight, Blk, Pwdr & 45/70 Conical
41	Barrel Stud, Blk, Pwdr
48a	Completer Ramp Sight
49	Lever tension Spring
50	Lever Tension Spring Screw
51/1	Forend Round Carbine
51/2	Frorend Round Rifle
51/3	Forend Octagonal Rifle
52	Forend Screw
53	Escutcheon
54	Barrel Band
55	Barrel Band Retain Spring
56/1	Carbine Stock
56/2	Rifle/Octagonal Stock
57	Buttplate
60	Rear Lock Plate Screw
70	Lever pin
71	45/70 Hammer
72	45/70 Extractor
73	45/70 Breech Block Complete
74	Guard Plate
75	45/70 Guard Plate Screw
76	45/70 Rear Bolt Assy. Disc.
77	45/70 Safety Screw
78	45/70 Safety
79	45/70 Safety Pin Retaining Screw
80	45/70 Safety Pin Retaining Screw
81	45/70 Firing Pin
82	45/70 Firing Pin Spring
83	Rear Sight, Octagonal Barrel
84	Front Sight, Octagonal Barrel
90	Screw, (Set Trigger)
91	Lock Spring (Set Trigger)
92	Guard Plate (set Trigger)
93	Screw (Set Trigger)
94	First Trigger (set Trigger)
95	Second Trigger (Set Trigger)
96	Pin (Set Trigger)
97/a	Complete 2 Trigger & Guard Plate
97	Trigger Screw
98	Trigger Spring Screw (Set Trigger)
100	Tumber Fly Screw

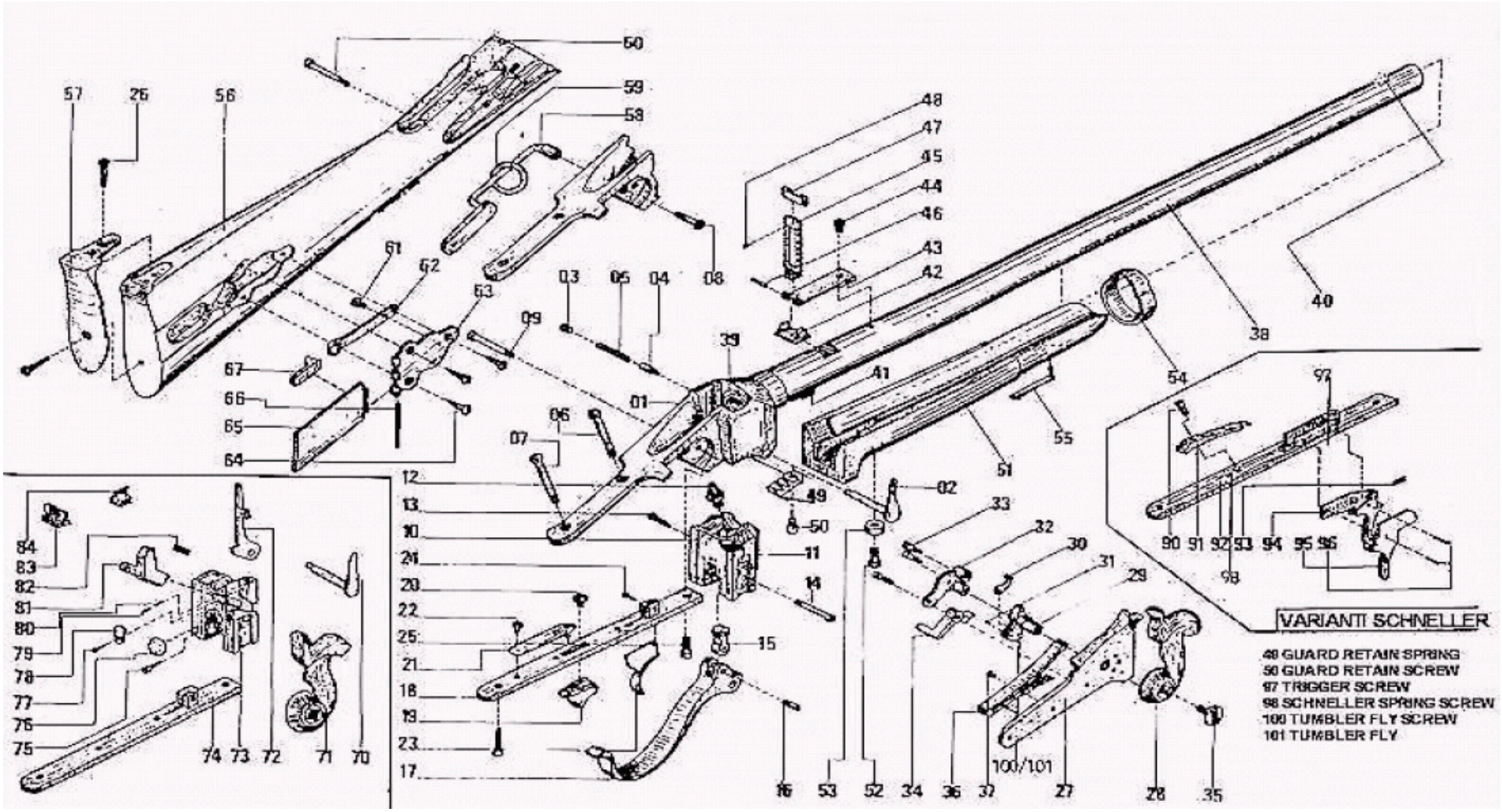
VARIANTI SCHNELLER
49 GUARD RETAIN SPRING
50 GUARD RETAIN SCREW
97 TRIGGER SCREW
98 SCHNELLER SPRING SCREW
100 TUMBLER FLY SCREW
101 TUMBLER FLY

PART III - INSPECTION AND MAINTENANCE

INSPECTIONS

Frequency of Inspections

All weapons shall be inspected before demonstrations and after the final cleaning on that particular day. Weapons in storage should be periodically checked for rust or other types of damage due to moisture.

If a weapon does not meet safety standards for any reason, a large string tag should be tied to it detailing the specific problem. Repairs should be affected as soon as possible.

Problems Encountered During Inspections

1. Overall poor cleaning. If a weapon is not cleaned immediately after use, the residue in the barrel will harden. Effective cleaning is made more difficult and there is a possibility of coke buildup in the bore. This is very dangerous, as, in subsequent firings, this coke buildup can retain a spark or smolder and ignite the fresh powder charge as soon as it drops into the barrel. Even if the primers alone are fired, they leave a corrosive residue both around the cone and in the breech area of the barrel. If this is not removed, rust will occur in these areas.There is also the possibility of a buildup of solid material around the cone which could be dislodged in subsequent firings, with the possibility of injury to the demonstrator or a visitor.

2. Weak mainspring. When cocking the piece, if there appears to be a weak mainspring, it should be replaced or taken to a competent gunsmith to be hardened. Complaints of blow-back through the vent of the cone may be the result of a weak mainspring. If the spring is weak, pressure from firing may cause gases and unfired powder to escape from the vent.

3. Weapon fires on half cock. This is probably due to wear of the half-cock notch on the tumbler. It may also be the fault of a weak or broken sear-spring. If the tumbler is at fault, it may be corrected or broken sear-spring. If the tumbler is at fault, it may be corrected by carefully deepening the half-cock notch. If the tumbler is badly worn, it should be replaced

4. Worn or damaged cone. When this occurs, the cone should be replaced. A common cause of blow-back is the vent of the cone being worn to a larger diameter, allowing excess gases to escape when the weapon is fired.

5. Bent or bulged barrel. This problem is fairly easy to see and should be noticed during any good inspection. If it is not badly bent, it can be straightened by any competent gunsmith; however, it is recommended that it be replaced. Bulged barrels are caused by firing ball ammunition ("live rounds") without seating the mine ball all the way down on the powder charge. THIS SHOULD NEVER BE DONE. A bulged or even a burst barrel will result. If a minie ball cannot be seated firmly on the powder charge by normal pressure of the ramrod, the ball and charge should be withdrawn by use of the ball puller.

6. Blown skirt or cleaning patch lodged in barrel. Attempt to remove a stuck patch or suspected blown minie ball skirt by careful use of the wiper. Always turn the wiper in a clockwise direction or the wiper may unscrew itself from the cleaning rod. If this procedure doesn't work, it may be necessary to pull the breech-plug.

The following checklist should be used when inspecting individual firearms. Newly purchased firearms should be inspected using this checklist prior to placing into service.

Dismounting the Sharps Carbine

1. Open the action and ensure the weapon is unloaded then close the action.

2. With the action closed, pull the hammer to half-cock.

3. Locate the lever hinge pin (Part # 02) on the right side of the receiver near the rear of the forearm. Next to the lever hinge pin is a small plunger pin that acts as a lock to prevent the lever from rotating accidentally.

4. Depress the small plunger pin which will allow the lever hinge pin to be rotated approximately 180 degrees.

5. With the weapon turned upside down, rotate the lever hinge pin forward and backward slightly while pulling outward to remove it.

6. Slide the trigger guard/lever and breech block out of the rifle.

Further disassembly of your Sharps rifle or carbine should only be attempted by a competent gunsmith.

Reassembly is accomplished in reverse order.

To Clean

1. Remove the trigger guard and breech block assembly and soak in hot, soapy water.

2. Clean the barrel with hot, soapy water using a bore brush and patches. Dry thouroughly and lightly oil.

3. Thoroughly clean and dry the trigger guard/breech block assembly and lightly oil.

4. If the weapon has a gas check plate, remove it from the front face of the breech block using a knife blade to carefully loosen the joint at the breech plate.

Note: The purpose of the gas check plate is to seal the rear of the chamber when the powder is ignited. If the gas check plate is not removed and cleaned regularly, it will become fouled, rendering it ineffective in sealing the breech. This leakage can permanently damage the gas check plate and possibly cause injury to the demonstrator

.

5. Clean the checkplate with soapy water or solvent.

6. Put a light coating of grease on the outside of the checkplate and place back in the breech block.

PART IV - CARBINE DRILL (DISMOUNTED)

The following is a manual for the proper handling and firing of a carbine on foot based on the drill *Compiled from U. S. standard authorities with important notes and a military glossary*, by T. Worthington, a graduate of West Point, and late Gen. 2d B. 7th D. O. M. Assisted by Maj. Sidney Burbank and Lieut. P. T. Swaine, U.S.A. Some modifications have been made to conform with National Park Service policies and standards.

Under no circumstances shall firing demonstrations be given from horseback. The added safety risk involved in firing mounted cannot be justified by the potential interpretive benefit.

MANUAL OF ARMS ON FOOT

Position of Carried Arms.

1. The carbine is in the right hand against the hollow of the right shoulder, the barrel perpendicular, the guard to the front; the arm slightly bent, the elbow close to the body, the thumb above the guard, the forefinger extended on the stock, the remaining fingers closed and in rear, the little finger pressing against the hammer.

2. The squad being at "carry arms," the instructor commands:

Order--Arms.

One time and three motions.

1. At the command “arms,” detach the carbine with the right hand perpendicularly four inches from the shoulder, seizing it at the same time with the left hand above the band.

2. Seize the carbine with the right hand half way between the left hand and muzzle.

3. Let go of the carbine with the left hand, which is dropped by the side; extend the right arm, bringing the carbine to the ground, the toe of the butt on a line with, and two inches from, the right toe, the guard to the front, the elbow near the body, the barrel between the thumb and forefinger, the remaining fingers in rear of the barrel.

Carry--Arms

One time and three motions.

1. At the command “arms, “ raise the carbine with the right hand perpendicularly, the barrel four inches from the shoulder, and seize it with the left hand just above the band.

2. Seize the carbine with the right hand, the thumb above the guard, the forefinger extended on the stock, the remaining fingers in rear of it.

3. Carry the carbine against the right shoulder with the right hand, dropping the left hand smartly by the side.

Present--Arms

One time.

1. At the command “arms,” carry the carbine with the right hand opposite to the middle of the body, the barrel perpendicular, the guard to the front, the forearm pressed against the body; seize the carbine with the left hand, the little finger just above the right thumb, the left thumb extended along the groove between the barrel and stock, the hand as high as the elbow; reverse the position of the right hand, brining the fingers to the front, the forefinger pressing against the under part of the guard, the thumb in rear of the stock.

Carry--Arms

One time.

1. At the command "arms," shift the position of the right hand, bringing the thumb to the front and above the guard, carry the carbine to the right shoulder, dropping the left hand smartly by the side.

Support--Arms

One time and four motions.

1. At the command "Arms," detach the carbine perpendicularly four inches from the shoulder, seize it at the same time just above the band with the left hand.

2. Raise the carbine with both hands, turning the barrel to the front, at the same time, changing the position of the right hand at the small of the stock, the fingers to the front, the thumb to the rear, the left hand opposite to the left shoulder, and as high as the eyes.

3. Place the left forearm under the hammer, the hand on the right breast, the fingers closed and pointing toward the right shoulder.

4. Drop the right hand briskly by the side.

Carry--Arms

One time and four motions.

1. At the command "Arms," seize the carbine at the small of the stock with the right hand.

2. Detach the carbine four inches from the shoulder, seizing it with the left hand just above the band, the thumb extended, the forearm pressed against the stock.

3. Bring down the carbine with both hands (changing the position of the right hand) to a position perpendicularly opposite to, and four inches from, the shoulder, the left forearm horizontal.

4. Carry the carbine against the hollow of the right shoulder, dropping the left hand briskly by the side.

Secure--Arms

One time and two motions.

1. Seize the carbine with the left hand just above the band, at the same time grasping it with the right hand just above the hammer.

2. Lower the muzzle, bringing the butt under the arm, the guard resting on the hip, the barrel uppermost, the thumb resting on the sight, at the same time drop the left hand briskly by the side.

Carry--Arms

One time and two motions.

1. At the command "Arms," throw up the carbine in a vertical position, seizing it with the left hand just above the band, shift the position of the right hand.

2. Carry the carbine to the right shoulder, and drop the left hand by the side.

Order--Arms

(As prescribed above)

Sling--Carbine

One time and two motions.

1. At the command "Carbine," raise the carbine perpendicularly with the right hand, place it in the left, which seizes it at the sight, the thumb extended along the barrel, the guard to the front; incline the muzzle to the left, that the ring may hang down, the left hand as high as, and opposite to the neck, slip the swivel to the front with the right hand, the thumb pressing on the short side to open it, insert it in the ring, and seize the carbine at the small of the stock with the right hand.

2. Let go with the left hand, which is dropped by the side, lower the muzzle, pass the carbine behind the back, push the butt to the rear, and drop the right hand by the side.

Unsling-Carbine

Two times (second time in) two motions.

At the command "unsling," seize the carbine with the right hand at the small of the stock.

1. At the command "Carbine," raise it, place it in the left hand, which seizes it at the sight, the guard to the front, the muzzle inclined to the left, the left hand as high as, and opposite to, the neck; free the swivel from the ring, and carry it to the rear with the right hand.

2. Seize the carbine half way between the point of the stock and the muzzle, bring it down, turning it at the same time, and resume the position of "order arms."

Ground--Arms

One time and two motions.

1. At the command "Arms," turn the carbine with the right hand, bringing the swivel bar to the front, bend the body, advance the left foot eighteen inches, lay the carbine on the ground in front of the body, lock up, the toe of the butt on a line with the right toe, the right knee slightly bent, the right heel raised.

2. Rise up, bring the left foot by the side of the right, and drop the hands by the sides.

Raise--Arms

One time and two motions.

1. At the command "Arms," bend the body, advance the left foot eighteen inches, raising the right heel, seize the carbine with the thumb and first two fingers, half way between the point of the stock and the muzzle.

2. Raise the carbine, bringing the left foot by the right, turn the carbine in the right hand, and resume the position of "Order Arms," No. II. When the saber is worn, it is seized with the left hand just above the lower ring, point to the front at the same time the first motion of Nos. XII and XIII is executed.

LOADING AND FIRING

Note: When demonstrating a carbine, the drill may be done with or without a sling.

Loading in Four Times.

The squad being at "Carry Arms," the instructor commands, "Load in Four Times."

1. Load

One time and two motions.

1. At the command "load," make a half-face to the right, turning on the left heel, bringing the toes of the left foot directly to the front; carry the right foot to the rear, the hollow of it opposite to, and three inches from, the left heel, detach the carbine perpendicularly four inches from the shoulder, raise it, and seize it with the left hand at the sight, the left forearm horizontal.

2. Lower the muzzle to the height of the eye, the left hand as high as, and opposite to, the right breast, the thumb extended along the barrel; move back the catch with the forefinger of the right hand, seize the lever with the thumb and first two fingers, and throw it open to its full extent, and carry the right hand to the cartridge box, and open it.

2. Charge--Cartridge

One time and two motions.

1. At the command "Cartridge," draw the cartridge, insert it (ball foremost) in the barrel, press it in with the thumb and forefinger, and seize the lever with the thumb and first two fingers.

2. Draw back the lever, move up the catch, half-cock, remove the old cap, and carry the right hand to the cap-pocket, and open it.

3. Prime

One time.

At the command "Prime," place a cap on the cone, press it down with the thumb. Seize the carbine at the small of the stock with the right hand.

4. Carry--Arms

One time and two motions.

1. At the command "Arms," carry the carbine to the right shoulder, the barrel to the rear; reverse the positon of the right hand, and face to the front.

2. Drop the left hand by the side.

Firing

The instructor commands:

Ready

One time and two motions.

1. At the command "Ready," make a half-face to the right, carrying the right foot square behind the left, the hollow of it opposite to, and three inches from, the left heel; detach the carbine vertically four inches from the shoulder; seize it with the left hand a little below the band, the thumb along the stock; raise it with both hands, the left as high as the neck; place the right thumb upon the head of the hammer, the forefinger on the guard, the second finger under it, the elbow as high as the hand.

(At the same time the men of the rear rank step off to the right six inches with the right foot, placing the left in front, the heel opposite to, and three inches from, the hollow of the right foot, so as to be placed opposite to the interval on the right of their respective file leaders.)

2. Cock the piece by lowering quickly the right elbow, and seize the small of the stock.

Aim
One time.

At the command "Aim," lower the muzzle quickly, the carbine resting between the thumb and first finger, the remaining fingers closed and under the stock, the right below at the height of the shoulder; place the face against the stock, shut the left eye, direct the sight eye along the barrel to aim, and place the forefinger of the right hand on the trigger.

(At the same time the men of the rear rank step off with the left foot six inches to the front, bending the left knee and leaning well forward, so as to throw the muzzle of their pieces beyond the faces of the men of the front rank.)

To recover arms before firing, the instructor commands:

Recover--Arms
One time.

At the command "Arms," take the finger from the trigger, raise the carbine quickly, and resume the position of the second motion of "Ready."

(At the same time the men of the rear rank bring back the left foot, the heel of it three inches from, and in front of, the hollow of the right foot, but remain opposite to the interval.)

To carry arms without firing after having made ready or recovered arms, the instructor commands:

Carry--Arms
Two times (second time in) two motions.

1. At the command "Arms," carry the carbine to the right shoulder, barrel to the rear; reverse the position of the right hand; at the same time face to the front, bringing the heels together.

(At the same time the men of the rear rank place themselves in rear of their fiel leaders, by stepping six inches to the left with the left foot, bringing the right heel by the side of the left.)
2. Drop the left hand smartly by the side.

Being in that position of "Aim," to fire, the instructor commands:

Fire
One time.

At the command "Fire," pull the trigger and fire without lowering or turning the head, and remain in this position.

If, after firing, the instructor does not wish to load, he commands:

Carry--Arms
Two times (second time in) two motions.

At the command "Carry," bring down the carbine to the second position of load; seizing it at the small of the stock with the right hand.

1. At the command "Arms," carry the carbine to the shoulder. (The rear rank men take their place behind their file leaders.)

2. Drop the left hand smartly by the side.

If, after firing, the instructor wishes to load, he commands:

Load
One time.

At the command "Load," bring down the carbine to the second position of load, load at will, carry arms, and face to the front.

(The men in the rear ranks place themselves behind their file leaders, after they have primed, and as their carbine is being brought to carry arms.)

Inspection of Carbine

The squad being at the position of order arms, the instructor commands:

Inspection--Carbine
One time and three motions.

1. Raise the carbine smartly with the right hand, keeping the barrel toward the body, place it in the left hand which seizes it at te sight, the thumb extended along the stock, the hand opposite to the shoulder and as high as the chin, the elbow against the butt, carry the right hand to the catch, disengage it and spring open the lever to its full extent, drop the right hand by the side.

2. Seize the lever with the thumb and first two fingers of the right hand, shut it, move up the catch, and drop the right hand by the side.

3. Seize the carbine with the right hand half way between the point of the stock and the muzzle, let go with the left hand, which is dropped by the side, carry the carbine with the right hand to the position of order arms.

Each man, as the instructor passes before him, executes the first motion of “inspection carbine.” The instructor takes the carbine, and, after inspecting it, returns it to the trooper, who seizes it as in the first motion of “inspection carbine.”

As soon as the instructor has passed by two files, the trooper who has been inspected executes the second and third motions of “inspection carbine.”

Inspection of Arms

The squad being at “Order Arms,” the instructor commands:

Inspection--Arms

Each trooper, as the inspector passes before him executes the first motion of inspection carbine. As soon as the instructor has passed by two files, the trooper, who has been inspected, executes the second motion of inspection carbine, turns the muzzle to the left, and slings it, No. X, and draws sabre. As soon as the sabre is inspected, it is returned, hooked up, and the trooper unsligns carbine.

PART V - MISFIRE PROCEDURES

Each park shall develop a Misfire Plan to address the action necessary to render a firearm safe in the event of a Level I or Level II Misfire.

TYPES OF MISFIRES

A "Level I Misfire" is defined as a misfire that can be cleared at the demonstration area and the demonstration can continue. Level I misfires usually are attributed to failure of percussion caps or clogged vents.

A "Level II Misfire" is defined as a misfire that cannot be cleared at the demonstration area without disrupting the demonstration. Specialized equipment may be needed to render the firearm safe. The audience must be dismissed, and the piece cleared in a safe manner away from the public.

CAUSES OF MISFIRES:

--Improperly cleaned firearm: If a firearm is not properly cleaned immediately after use, the residue in the barrel will harden, rust and corrosion will form. This buildup of fouling will likely obstruct the vent. Excessive oil may pool in the breech and obstruct the vent or neutralize the powder charge.

--Obstruction of the vent: The vent may become obstructed by fouling, excessive oil, or particles from the percussion cap. New firearms with re-occurring misfires should be checked to see if the vent of the cone properly aligns with the vent in the bolster.

--Poor quality percussion caps: The fulminate of mercury used in the percussion cap will deteriorate if stored a damp environment, making the caps ineffective.

--Improper loading procedure: The powder charge is not properly seated under the vent. Once fire has been introduced to the bore, do not re-ram the charge!

LEVEL I MISFIRE PROCEDURES

Should a misfire occur:

1. Remain at position of aim.
Count to ten.

2. Lower the piece to the first position of prime. Half-cock the piece, remove the spent cap and visually inspect the vent of the cone. Use the cone pick if necessary to remove obstructions of the vent.

3. Repeat prime, ready, aim and fire procedure.

4. Repeat procedure two times. If the weapon still misfires, it must be removed from the visitor area, taken to a secure area, as designated in the Park Misfire plan, and the following procedure is used.

LEVEL II MISFIRE PROCEDURES

LEVEL II MISFIRE—CO2 DISCHARGER

1. Keep the piece pointed in a safe direction.

2. Half cock the piece and remove the cap.

3. Place the CO2 discharger with adapter over the cone evenly for a good seal. Press the discharger lever quickly and release.

4. Clean and inspect the piece before attempting to load it again.

LEVEL II MISFIRE—UNLOADING THROUGH THE MUZZLE

Should the CO2 discharger not be available or fail to remove the charge, the piece must be unloaded through the muzzle:

1. Soak the powder charge with water poured down the muzzle.

2. Open the action and remove the charge.

3. Clean and inspect the piece before attempting to load it again.

PART VI - LABORATORY

MANUFACTURING BLANK CARTRIDGES

Materials Needed

- Hardwood Cutting Board
- Wood Ruler
- Knife or Scissors
- Paper (Nitrated or Cigarette Rolling Paper)
- Round Ball or Marble of same caliber as weapon
- Elmer's Glue
- Ffg Black Powder
- Former - Same diameter as the ball adn six inches long with one end slightly concave
- Trapezoid Pattern

Nitrated paper is simply a light weight, high "rag bond" paper soaked in a saturated potassium nitrate solution. A saturated solution is made by adding potassium nitrate to water until it will dissolve no more of the chemical. Best results are achieved if the water is slightly above room temperature. Place the saturated potassium nitrate solution in a flat pan. Next place the paper into the pan and allow it to become completely saturated with the solution. Remove the saturated paper from the solution and allow it to completely dry.

1. The dried paper is cut to the shape shown at right.

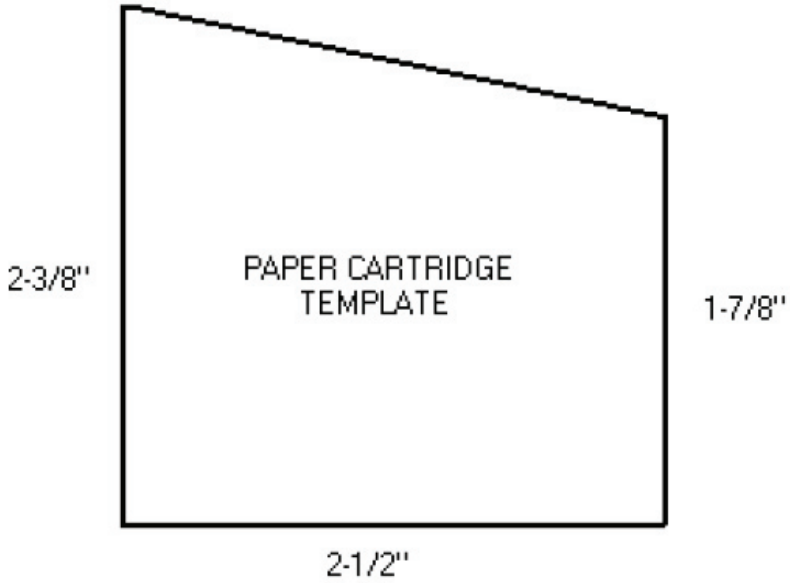

2. Roll the cut nitrated paper around a dowel the same diameter as the bullet you are shooting.

3. Glue the paper along the edge to form a cylinder.

4. Pour a measured charge of black powder into the cylinder and fold the open end of the cylinder over, sealing it with glue. The cartridge is now ready for use.

National Park Service

TABLE OF MAXIMUM LOADS - SMALL ARMS

Weapon Types	Caliber	Maximum Blank Charge
18th Century Flintlock		
"Brown Bess" Musket	.75	125 grains Ffg
Charleville Musket	.69	125 grains Ffg
American Musket	.69	125 grains Ffg
Kentucky Rifle	Variable	90 grains Ffg
Pistols & Horse Pistols	Variable	90 grains Ffg
19th Century Percussion		
U.S. Rifle M1841	.54/.58	60 grains Ffg
U.S. Musket, M1842	.69	75 grains Ffg
U.S. Rifle Musket, M1855-1864	.58	60 grains Ffg
British Enfield Rifle	.577/.58	60 grains Ffg
U.S. Rifle, Musketoon	.58	60 grains Ffg
Sharps Carbine/Rifle	.54	60 grains Ffg
Revolver	.36/.44	27 grains Fffg
19th Centiry Metallic Cartridge		
U.S. Rifle, M1866-1870	.45	70 grains Ffg
Sharps Carbine	.50	55 grains Ffg
U.S. Rifle, M1873-1884	.45	70 grains Ffg
U.S. Carbine, M1873-1884	.45	55 grains Ffg
Henry Repeating Rifle	.44	28 grains Ffg
Colt/S&W Revolver	.45	28 grains Ffg

PART VII - SMALL ARMS DEMONSTRATION

BEFORE

( ) The piece has been inspected, inside and out. Bore is clean of foreign material.

( ) The demonstrator approaches the demonstration area carrying the firearm in a safe and military fashion.

( ) He is not encumbered with superfluous equipment.

( ) Misfire equipment is in place at the demonstration area.

( ) Visitors have a good filed of vision of the demonstration.

( ) The interpreter has a clear view of all the visitors and down range area.

( ) Physical barriers between the visitors and the demonstration area are in place.

( ) Conditions are not too dry or windy to risk a range fire from the muzzle blast.

( ) First aid kit and emergency communications are available.

DURING

( ) He is competent with the manual he is using.

( ) There is sufficient additional people for interpretation and crowd control.

( ) The demonstration area is safe for the size of the audience.

( ) The firearm is always pointed in a safe direction.

( ) At no time are there any parts of the demonstrator's body placed in a hazardous position in relation to the firearm.

( ) No firing is conducted from horseback

( ) All percussion revolvers are loaded and fired one round at a time.

( ) In the event of a misfire or other unscheduled event the demonstrator reacts properly.

AFTER

( ) The demonstrator maintains military bearing and leaves the area carrying the firearm safely and in a military fashion.

( ) The demonstration area is policed for dropped cartridges, cartridge papers, etc.

( ) Any remaining cartridges are returned to storage facility

( ) The piece is cleaned, dried and oiled. The piece is returned to the storage facility.

( ) Any accessories are accounted for.

( ) Your overall impression is favorable.

Rating Sheet – Proficiency in Percussion Revolver Drill

Name_____ Date_____

BIBLIOGRAPY