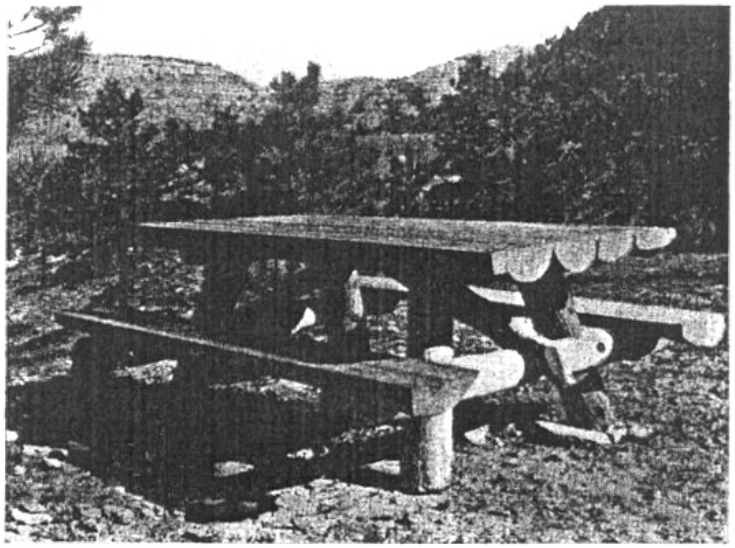

Picnic Unit

Guernsey Lake State Park – – – Wyoming

A heavy rustic type in which the seats are carried on cross-beams bolted to the legs of the table. There is the possibility of extending the length of the legs to allow for planting in the ground to prevent casual moving of the unit. This basic type of table is widely used in the plains and mountain states. Happily the very nature of the rustic material employed serves to save any one unit from appearing to be the exact duplicate of its next neighbor as the opposite illustrations demonstrate.

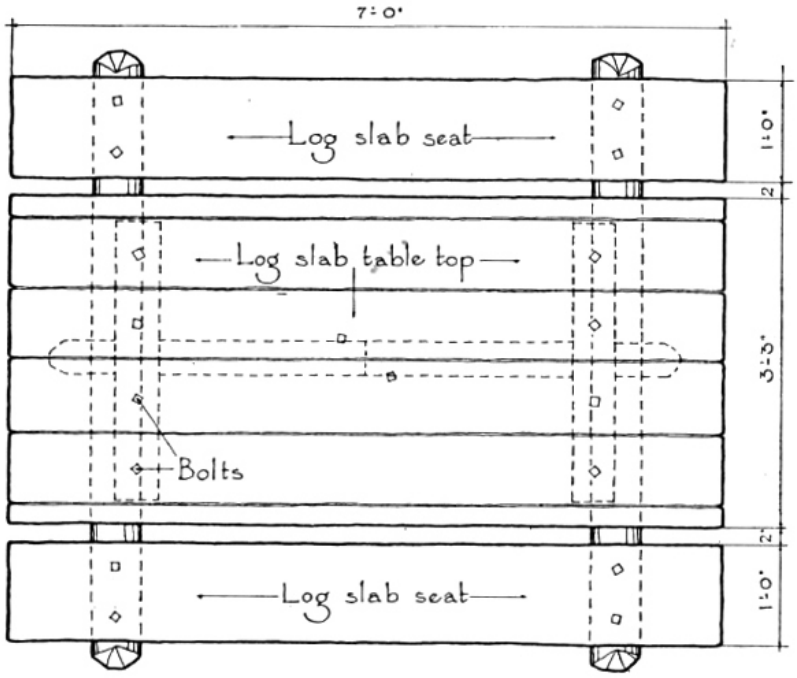

PLAN

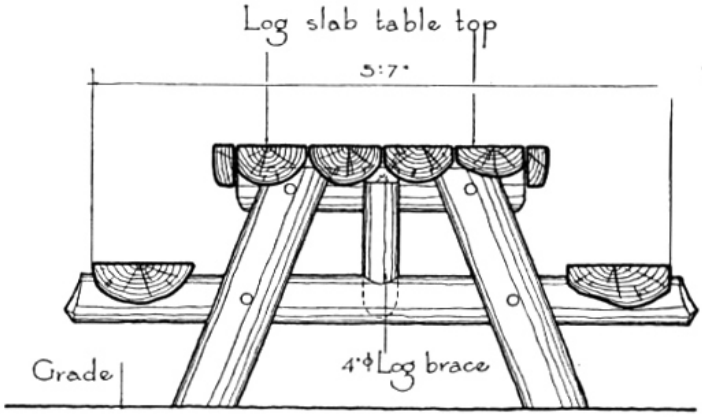

SECTION

All logs and slabs to be peeled

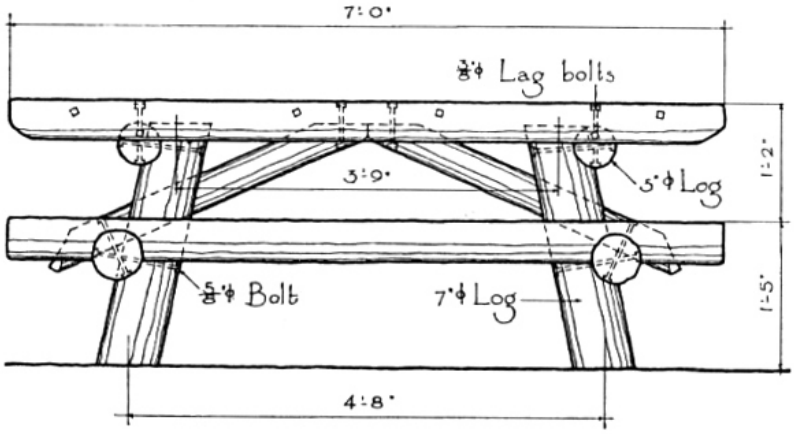

SIDE ELEVATION

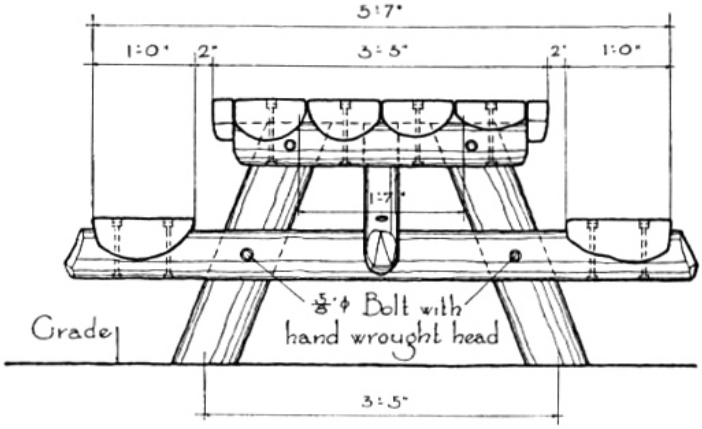

END ELEVATION

Scale ½" = 1'-0"