STAGE LOAD ASSESSMENT & ACCESSIBLE HANDRAIL INSTALLATION

AT THE CARTER BARRON AMPHITHEATER

Prepared for: National Park Service
Rock Creek Park
Washington, DC
Attn: Kimberly D. Benson, Architect
Chief of Design and Construction

Prepared by: Johnson, Mirmiran & Thompson, Inc.
72 Loveton Circle
Sparks, Maryland 21152
Ph: 410-329-3100

DISTRICT OF COLUMBIA
JEFFREY CERQUETTI
PE901508
REGISTERED
PROFESSIONAL ENGINEER (CIVIL STRUCT)
2/1/17

JMT Job No: 13-1429-010
IDIQ Contract No: P14PC00241
Task Order No. 10
PMIS Nos: 196825C & 149668A

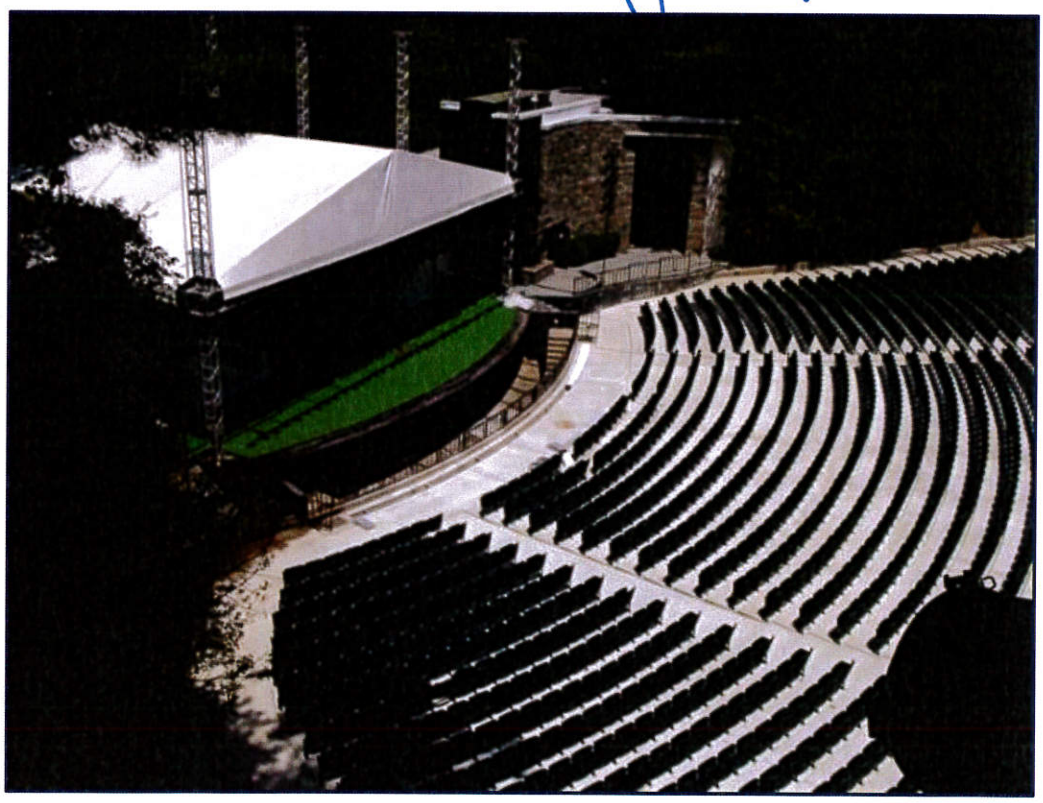

Historic Photograph

TABLE OF CONTENTS

Cover 1
Table of Contents 2
Executive Summary 3
Report Overview 5
Project Background 5
Existing Available Documents 5
Existing Conditions 6
    Stage 6
    Pathway 8
Stage Load Analysis 10
Pathway ABAAS / ADA Compliance 17
Conclusions and Recommendations 18
    Stage 18
    Pathway and Railings 22

Appendix

A. Existing Conditions – Topographic Worksheet
B. Lower Path Slope Calculations
C. Existing Stage Framing Plan and Details
D. Spall & Coring Locations, and Rebound Hammer Statistics
E. Structural Calculations
F. Test Reports
    i. Concrete Compressive Strength
    ii. Petrographic Analysis

EXECUTIVE SUMMARY

JMT was tasked by the National Park Service (NPS) to perform the following work at the Carter Barron Amphitheater in Rock Creek Park:

- A structural load assessment of the existing stage floor.
- Complete an earlier design for installation of accessible handrails along an existing pathway.
- Verify compliance of the maximum pathway slope for complying with the Architectural Barriers Act Accessibility Standard (ABAAS) and the American Disabilities Act (ADA) .

The stage floor, built in the 1950s, is constructed with a monolithically poured concrete frame consisting of concrete beams, slabs and columns. The original stage floor was subsequently modified by filling in floor openings with concrete. A painted, wood sleeper and plywood floor currently overlays the concrete slab of the stage. Historical documentation indicates steel truss systems supporting fabric covers, curtains, backgrounds and lighting systems were once in place. These truss systems have been removed.

A previous report completed in 2014 noted areas of considerable water penetration, cracking, spalling and rusted reinforcing at the concrete stage. The report also noted chloride contaminated concrete at the front of the stage. A structural load and stress analysis was not performed at that time.

JMT performed a structural load analysis using the original design loads from the historic documents. The forces and stresses obtained from this analysis were compared and checked against the structure's capacity based on current Codes and Standards. Concrete strength was indicated on the historic documents and JMT obtained core samples for testing to confirm the material properties of the concrete. Results of the core testing show that the concrete strength is higher than the original design strength and that the concrete is in generally good condition.

Based on current Codes, the structural load analysis indicates the structure is currently subjected to forces and stresses above its allowable design capacity in shear strength solely with the dead load of the structure. Therefore, subjecting the stage area to additional live loads for any type of Code defined or classified use is not recommended. Use of the structure as a stage should be suspended as the current Code requires a 150 psf live load until at such time the structure can be replaced, or strengthened and repaired to allow for the application of stage loads.

As further discussed in the conclusions and recommendations section of this report, it is recommended that the NPS:

1. Suspend operations on the stage structure for use as a stage or other loadings as would be defined by any of the IBC, Chapter 3, Use and Occupancy Classifications.
2. The NPS should consider implementing a temporary shoring systems as soon as possible, until the structure could be replaced or strengthened and repaired.

3. The structure could be removed and replaced, or strengthened and repaired, to allow for the application of stage loads. This would generally provide for the direct construction and account of quantities and costs. This option results in a new stage structure with a 75 to 100-year use. For comparison, a preliminary order of magnitude estimate for removal and replacement could be $520,000 to $620,000.

4. Another option could be to strengthened and repair the structure by installing carbon fiber systems with the conventional repair of damaged areas. This option may be considered as it allows for the existing structure to remain in place. Complete strengthening and repair could result in a fully rehabilitated stage structure with a 50 to 75-year use. Generally, repair projects of this type have in-direct costs with cost changes during construction. For comparison, a preliminary order of magnitude estimate for carbon fiber and repair could be $460,000 to $560,000.

5. Planning for the future work is recommended to further define and detail project requirements, direction, schedule, scope, costs, and funding.

The pathway from the promenade to mid-section of the amphitheater is currently designated as an accessible route for disabled persons. As tasked by the NPS, JMT provided separate construction documents apart from this report for a railing system which meets structural requirements based on a previous design. We were asked to verify this existing pathway is in compliance with Architectural Barriers Act Accessibility Standard (ABAAS). JMT performed a field survey and used this data to calculate the running and cross slopes of the pathway. These calculations indicate that both the running slope and cross slope are steeper than the maximum slopes as allowed, and therefore, do not comply with ABAAS. Providing an accessible pathway meeting ABAAS requirements requires rework of the pathway itself and subsequent coordination of the railing profile. Due to the non-compliant slope of the pathway the railings should not be installed without correcting the pathway.

REPORT OVERVIEW

Johnson, Mirmiran & Thompson (JMT), was tasked by the National Park Service (NPS), to perform a structural load assessment of the stage floor, and to complete an earlier design for installation of accessible handrails along an existing pathway. We were also asked to verify compliance of the maximum pathway slope permitted for complying with the Architectural Barriers Act Accessibility Standard (ABAAS) and the American Disabilities Act (ADA).

PROJECT BACKGROUND

The Carter Barron Amphitheater stage floor structural system was constructed circa 1950s. The annual attendance for performing arts attractions is approximately 70,000 patrons. The stage floor consists of a wood sleeper and plywood finished floor over a reinforced concrete supporting structural system. Historic documentation has shown stage truss framing systems supporting enveloping stage curtains, backgrounds and lighting with sound systems. The truss framing system has since been removed.

Concern for the reinforced concrete supporting structural system was raised in a previous condition assessment report completed in February 2014 by Protection Engineering Group. The report indicated areas of compromised strength of the concrete, including evidence of excessive calcium chloride calcification, particularly at the proscenium. Other damages resulting from calcification, such as rusting of reinforcing and spalling, were noted. A structural load and stress analysis was not performed as part of this report.

Previous work, including new seating, lighting and approaches, along with the removal of the overhead stage trusses, was completed under a contract in early 2004. (Reference Historic Photo on Page 1.

Funding limitations precluded the installation of handrails to a newly paved asphalt pathway at the amphitheater leading from the promenade to the mid-section. NPS tasked JMT to finalize a structural design for an Architectural Barriers Act Accessibility Standard (ABAAS) compliant handrail system along this pathway, with the intent to match existing railings based on *Rehabilitate Carter Barron Amphitheater, Phase I, 04-11-2003* drawings that were supplied by the NPS. New work includes the fabrication and installation of approximately 512 linear feet of handrails from the promenade to the mid-section of the amphitheater to match the existing bronze-colored anodized aluminum railings. Previous survey information of the pathway was not available; therefore, survey work was required to verify existing pathway slopes for compliance to applicable ABAAS/ADA Codes and Standards.

EXISTING AVAILABLE DOCUMENTS

Existing documents reviewed included but not limited to:

- *Amphitheater, Revision A, 3/14/50, drawing no 55.9-41-S1A*
- *Rehabilitate Carter Barron Amphitheater, 11-16-2001.*
- *Rehabilitate Carter Barron Amphitheater, Phase I, 04-11-2003.*
- *Rehabilitate Carter Barron Amphitheater, Phase II, 5-7-2003.*

- *Structural Assessment of Cater Barron Amphitheater, Condition Assessment Report, Protection Engineering Group, February 2014.*

These documents and their contents are further referenced in the remainder of this report.

EXISTING CONDITIONS

STAGE

The stage area (indicated by the red hatch in Figure 1) is approximately 72-feet wide by 78-feet deep, and stands 12-feet tall above grade. It is constructed with a reinforced concrete one-way slab and beam system, and bidirectional moment-resisting frames for lateral resistance. Columns appear to be bearing on spread footings, though this could not be verified without exploratory excavation. Existing drawings indicate that the structure was built in the 1950s; a reproduction of which can be referenced in Appendix C. This framing plan indicates six floor openings framed between the concrete beams. These openings likely allowed for stage production operations. Also, originally, a front portion of the stage floor appeared to have been framed with sheathing over a lumber joist system.

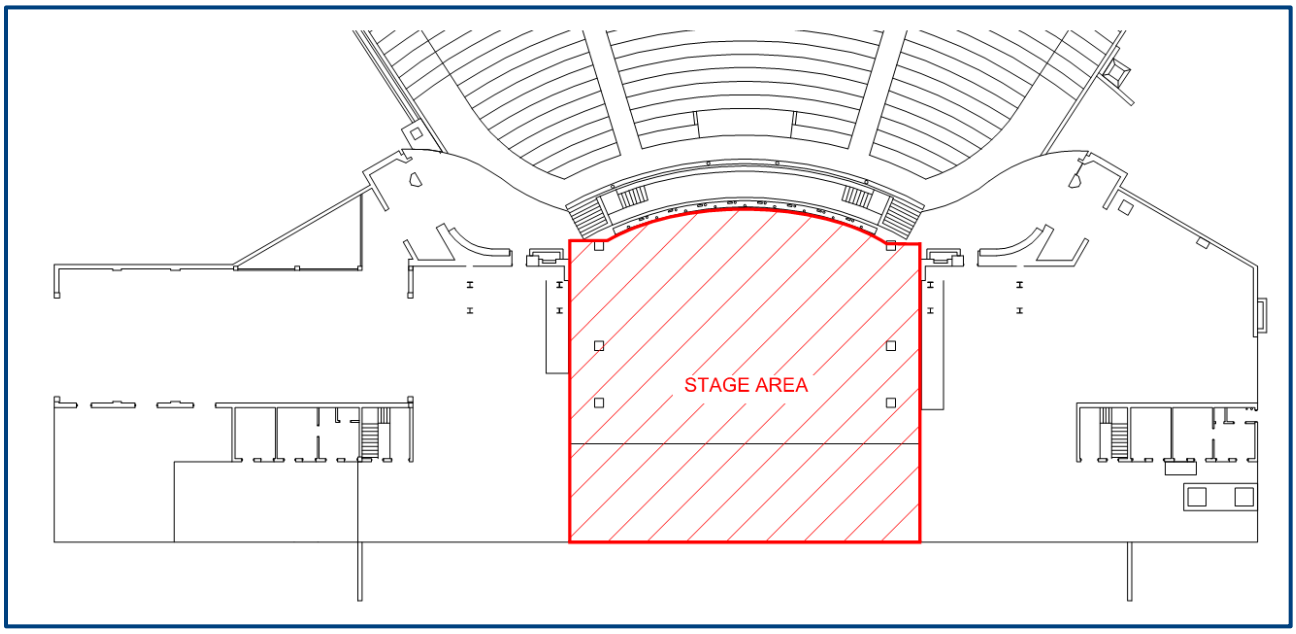

Figure 1: Stage Area Location

On August 25, 2016, JMT traveled on-site to observe and document the existing condition of the structure, which included items such as concrete damage (e.g. spalls, cracks, water damage), notable deflections, general conformance to existing drawings, and to determine coring locations for subsequent concrete sampling and testing for strength and petrographic analysis. Access to underneath the stage was readily available, and the general condition of the underside of the stage structure can be seen in Figure 2.

Figure 2: Picture at the Underground Entrance Looking Up at the Stage Structure

The six original framed openings and the bay at the front potion of the stage have been in-filled with concrete. The in-fill slab is supported by thickened slab ends bearing on top of steel angles (Figure 3). Documentation for the construction of the in-fill slabs was not available. Also, there were several instances where spalls were observed at the in-fill areas which appear to have been caused by rusted rebar. Locations of spalls, cracks and other damage can be found in Appendix D.

Figure 3: Concrete Fill at Trapdoor Opening w/ Spall Damage

At the northeast and northwest corners, the two staircase landings showed signs of undermining below the elevated slabs (Figure 4). The landings were constructed without retaining walls. Continuance of the undermining will eventually lead to instability or compromising of the landings and staircases.

Figure 4: Stair Landing at Northwest Corner with Soil Falling Out from Underneath Slab

PATHWAY

The pathway at the amphitheater leading from the promenade to the mid-section of the seating area is approximately 4-feet wide by 270 feet long with an elevation change of approximately 12 feet. It is primarily constructed with asphalt with a few segments being concrete. Existing handrails are provided at limited portions along the pathway (Figures 5 & 6). A field survey of the pathway was performed by JMT on August 25, 2016. Results of the survey is shown on the drawings titled *Existing Conditions – Topographic Worksheet*, which can be found in Appendix A.

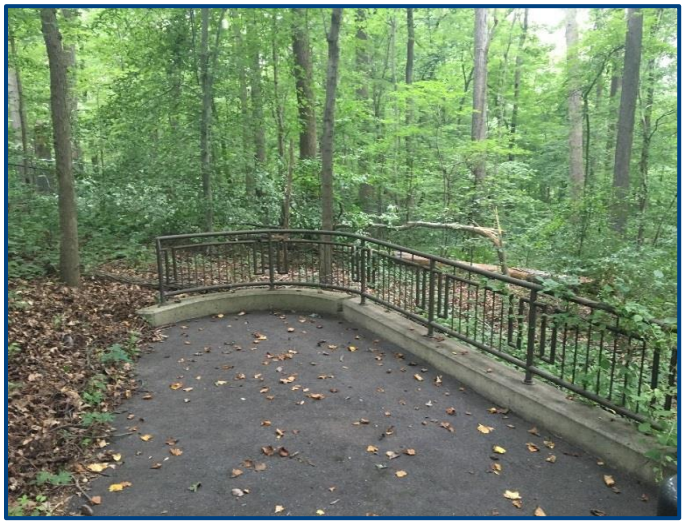

Figure 5: Existing Railing

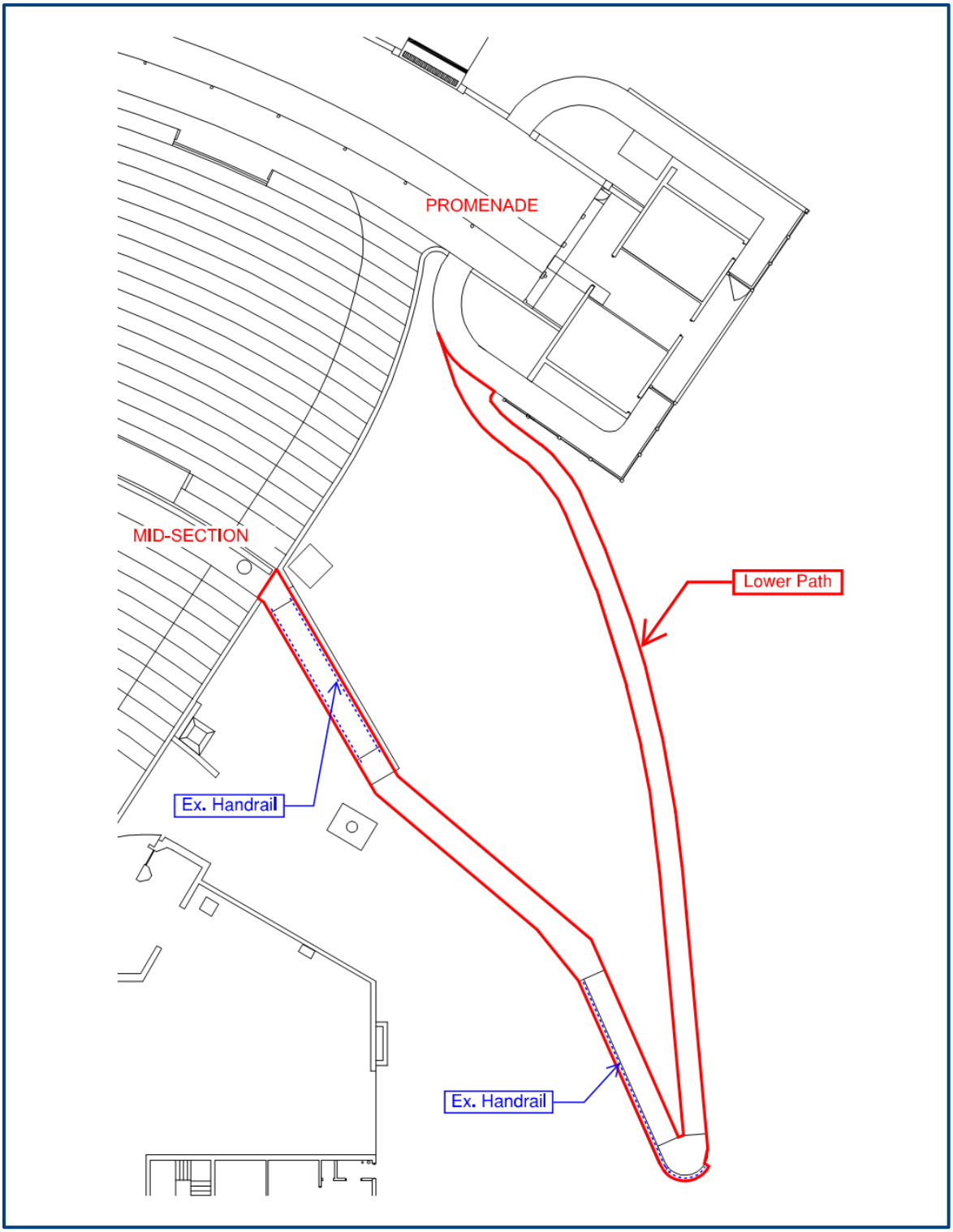

Figure 6: Existing Lower Path and Handrails

STAGE LOAD ANALYSIS

JMT's load analysis was based on current standards, as well as a review of a historically based analysis that would have been performed circa 1950s. The structure was modeled in RAM Elements software (by Bentley) to ascertain the applied forces. The RAM Elements software was used to then check the applied structural forces and stresses of the members against the members' capacities that were calculated in accordance with The Building Code Requirements for Structural Concrete, ACI 318-14, and Commentary on Building Code Requirements for Structural Concrete, ACI 318R-14. Original design live load and material properties were indicated on the existing drawings as follows:

- Stage Floor Design Live Load = 100 psf.
- Soil Bearing Capacity = 4000 psf.
- Concrete (Class B) = 2500 psi.
- Reinforcing Steel (Intermediate Grade) = 20 ksi allowable (40 ksi yield)

As a part of the scope of work, JMT hired ECS Mid-Atlantic (ECS) to obtain concrete cores for compressive and petrographic sample testing. The purpose was to confirm the 2500 psi design concrete strength, and to obtain a general condition of the concrete matrix through petrographic analysis. JMT and ECS performed field sampling on September 28, 2016 to obtain five cores (three for compression testing and two for petrographic analysis). To avoid damaging the exterior stage wood finish, cores where obtained by drilling up from underneath the slab (Figure 7). Locations of the five cores can be found in Appendix D.

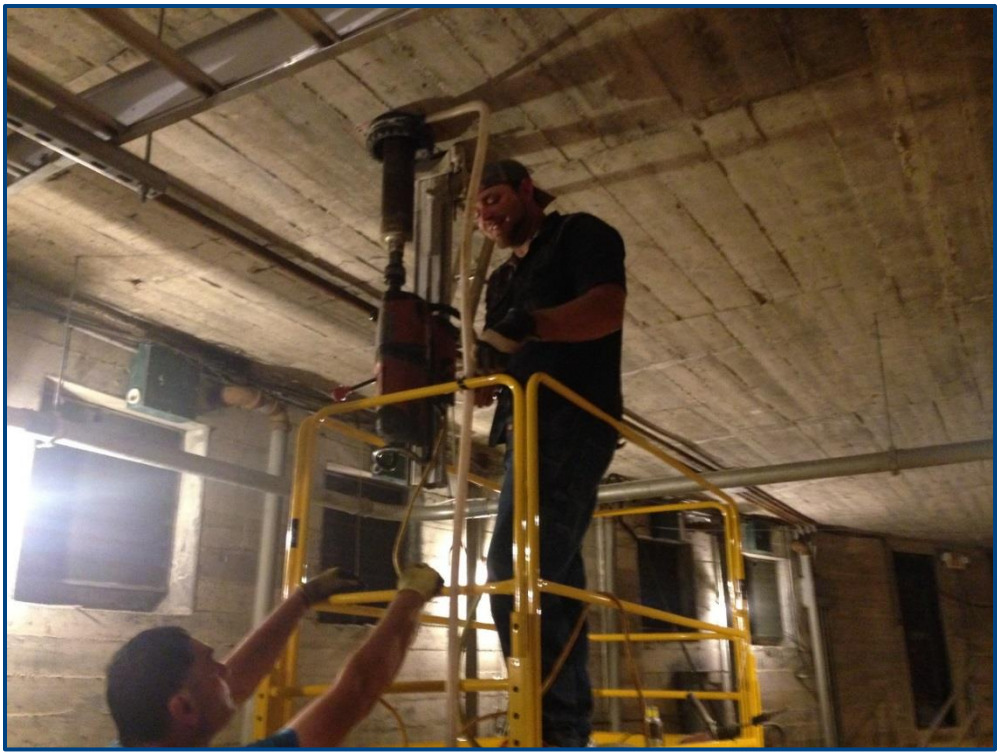

Figure 7: ECS Obtaining a Compression Core with an Underside Surface Mounted Drill Rig

After the cores where taken, holes were patched with dry-pack grout. A typical core sample is shown in Figure 8.

Figure 8: Core Sample

On October 6, 2016, JMT received the results of the three compressive break tests from ECS, which can be referenced in Appendix F. Results are summarized in the table below:

Core I.D.	Corrected Strength (psi)	Average Strength (psi)
1	4560	4500
2	4970	
3	3980	

A compressive strength of 4000 psi (lower bound) was used for member capacity calculations.

On October 30, 2016, JMT received the results of the two petrographic analysis, which can also be referenced in Appendix F. Generally, the petrographic analysis showed that the concrete samples were in good condition, but were of poor quality for modern exterior concrete due to the lack of an adequate air void system to offer resistance to cyclic freezing and thawing while in a saturated condition. No evidence of freeze-thaw related damage was observed in either sample – an indication that the samples were not, or rarely, in a saturated condition when experiencing cycles of freezing and thawing. ACI recommends an average air content of 5 to 6% (+/- 1.5%) for exterior concrete with 1" aggregate in moderate to severe conditions. Sample P-1 indicated an air void content of 1.8% and sample P-2 indicated an air content of

2.0%. Both were below the recommended values of ACI. It is possible that the waterproofing membrane, wood sleeper and plywood floor, or combination thereof, provide some protection from freezing and thawing damage.

The waterproofing membrane as indicated on the top surface of each sample also has protected the top surface of the concrete from exposure from atmospheric carbon dioxide. Over time, exposure to carbon dioxide leads to carbonation on concrete surfaces and weakens the concrete by reducing the effective depth of the concrete cross section. Carbonation levels were generally observed as:

- Top surface: 1/8” to 1/32”
- Bottom surface: 1-1/16“ to 1-1/4”

These levels would be expected for concrete of this age.

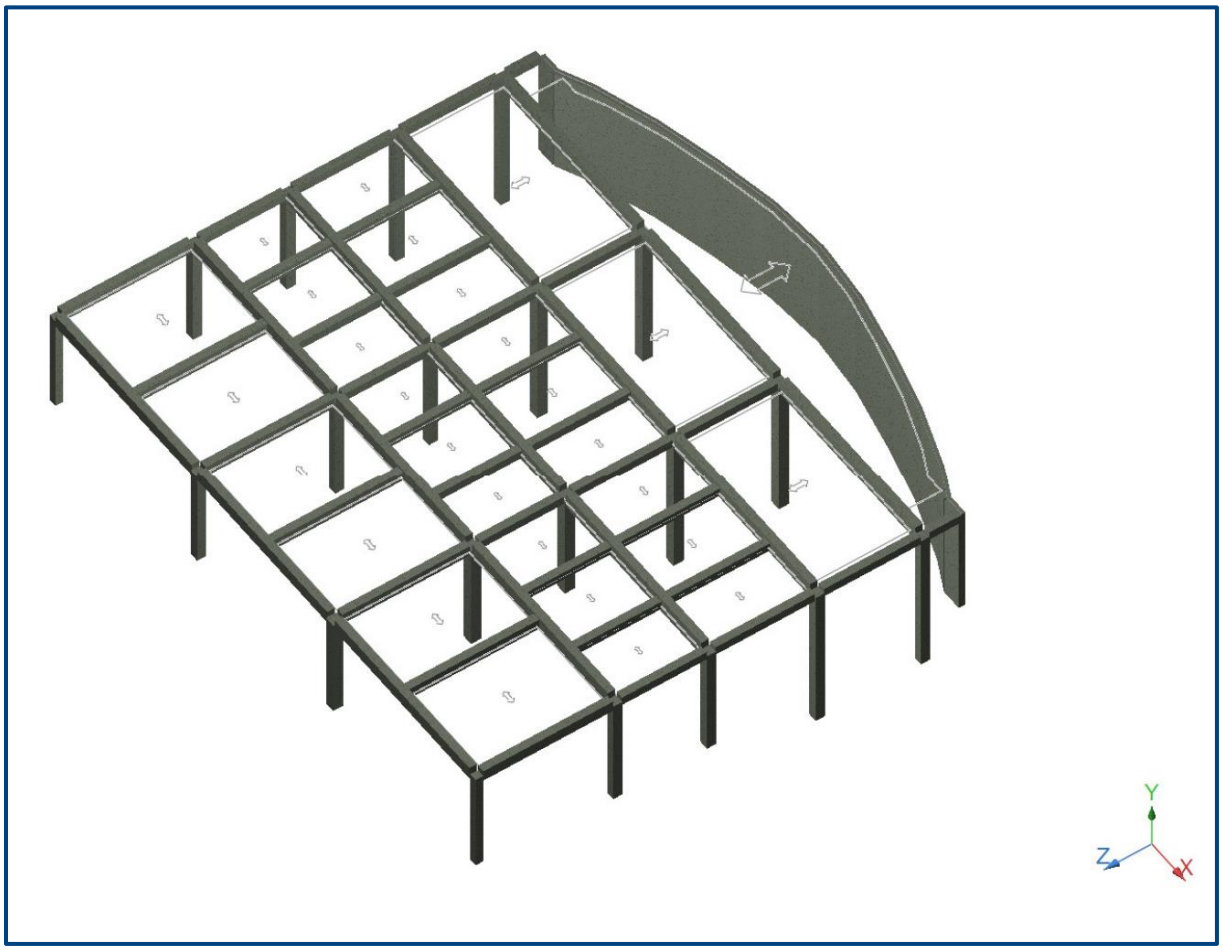

Figure 9: Isometric View of the Analytical Model

The coarse and fine aggregate in both samples were similar and generally appeared to be hard, sound and durable. Each sample showed a water cement ratio between 0.45 and 0.50. Concrete Surface Profiles of the concrete samples were a CSP3.

For the analytical model, a live load of 100 psf was first applied to the structure, as this was the original design load indicated on *Amphitheater, Revision A, 3/14/50, drawing no 55.9-41-S1A*. According to the International Building Code, IBC 2015, a stage floor is typically designed for 150 psf. An isometric graphic of the analytical model can be seen in Figure 9.

The structural analysis calculations for the Structural Load Assessment of the Stage Floor are presented in Appendix E, *Structural Calculations*. The concrete structure was analyzed following the Load and Resistance Factored Design (LRFD) methodology, based on ACI 318-14.

Calculations indicate significant computational shear overstresses in the beams and girders with the original design and applied live load of 100 psf. These results can be attributed to the following:

1. The additional dead and live load resulting from the trapdoor and bay in-fill areas has increased the overall applied loads to the structure. This has produced higher bending and shear stress onto the supporting concrete beams and girders which were not accounted for in the original design. Also, when the in-fill areas were constructed, the beams and girders were not reinforced to allow for the added loads. Furthermore, the in-fill areas do not offer any structural continuity of the existing slab.
2. Computer models more accurately distribute the applied loads to supporting members based on their inherent stiffness and continuity of the structure, as opposed to hand analysis. The load analysis originally performed in the 1950s would not have allowed for these applications, but would have been based on more simplified hand analysis and design procedures.
3. Review of the existing documentation found that shear reinforcement (i.e. ties or stirrups) were, at several instances, spaced too far apart to be included and accounted for in shear strength; therefore, those instances could only consider concrete shear strength for un-reinforced shear sections. ACI 318-14 limits spacing to a maximum of d/2.
4. The current procedure to determine the shear capacity of a concrete beam without web reinforcement is significantly different than the procedure used in the 1950s. In accordance with the current Code of the American Concrete Institute, ACI 318-14, the allowable shear capacity is less than the allowable shear capacity calculated from the 1950s. Research and testing has occurred since the 1950s and the industry has resulted in a better understanding of shear behavior in beams. Codes are typically updated as new information (through testing or experience) becomes available. Limited shear calculations following the Allowable Stress Design (ASD) methodology ACI 318-56, indicate that the beams were designed appropriately for an unreinforced web section in shear for the historic period.

Furthermore, when reviewing the analysis, it appears that the structure's shear overstresses are triggered with an application of the dead load only, which means that the structure's self-weight has been performing within the red zone (i.e. above the allowable design limit). Diagram 1 illustrates this concept, using Beam G1 as an example:

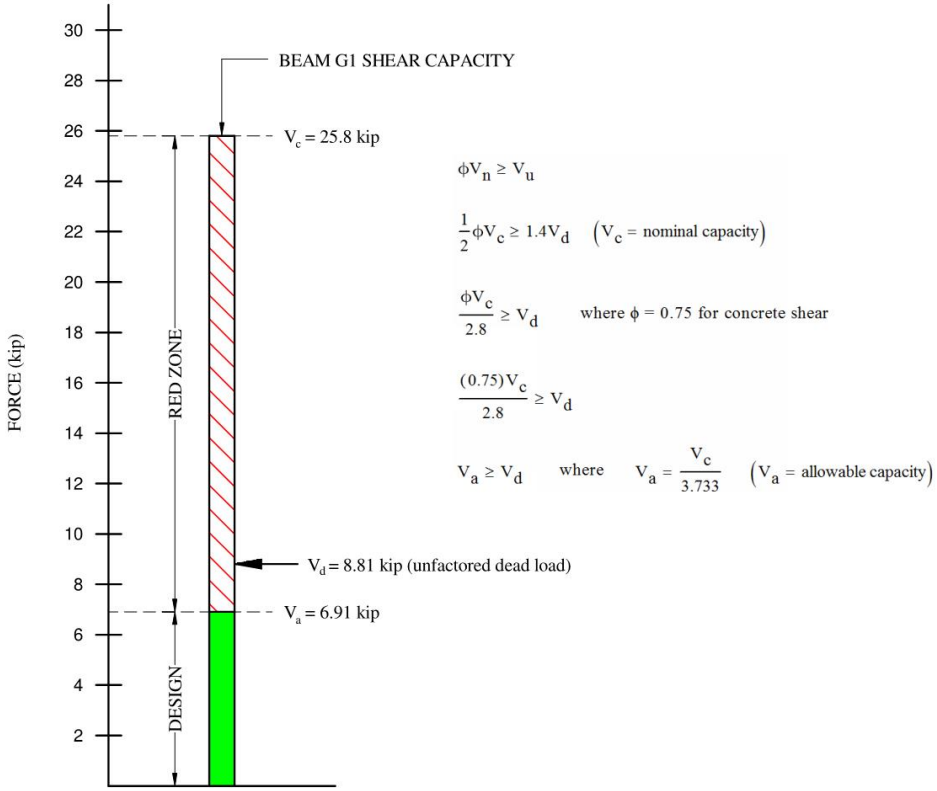

Diagram 1: Beam G1 Shear Capacity vs. Applied Dead Load

Because the Load and Resistance Factor Design (LRFD) procedure is being used as required by ACI 318-14, the shear strength inequality $\phi V_n \geq V_u$ had to be rearranged to present the shear capacity in a Factor-of-Safety (FOS) format. Therefore, the beam's inherent FOS for shear following current design codes equates to 3.733. Analysis shows that the applied shear due to un-factored dead load is 8.81 kips – greater than the allowable capacity of 6.91 kips. However, this value is still relatively less than the nominal capacity of 25.8 kips. Approaching the nominal capacity would remove any strength factors as required by the ACI Code and would increase the risk of inducing a structural overload on the members. Furthermore, applying loads greater than the allowable capacity could result in permanent deformations being induced in the members. The structural capacity of the member is deemed acceptable when the applied load in all its applied combinations of dead, live, seismic, etc. is less than the allowable capacity as required by the applicable design Code (i.e. $V_a \geq V_d$).

Other beams that are operating in the red zone are indicated in the structural calculations (Appendix E).

Application of a 150 psf live load, as required by current codes, results in further theoretical shear overstressing of the stage framing, since the current stage framing floor structure is not adequate to resist a 100 psf live load, nor even its own intrinsic self-weight.

A shear failure crack can be seen in Figure 10 (as was documented in the February 5, 2014 report). This is evidence to support the fact that the structure is not adequately performing in shear.

8: Underside of the stage edge

Figure 10: Shear Failure Crack Photo Structural Assessment of Carter Barron Amphitheater, Protection Engineering Group, Feb. 5, 2014.

The structure will perform adequately in flexure for the historical 100 psf live load. Beam G7 contains the highest flexural stress ratio of 0.95 ≤ 1.0. The structure, however, will be overstressed and operating in the red zone for flexure to support the currently required 150 psf live load.

Existing documents (Figure 11) show that the stage floor was originally designed with a 2-inch topping; however, the core samples taken (Figure 12) indicate a topping is not present. Rather, a painted wood sleeper and plywood system currently overlays the stage floor (Figure 13). Based on the 2001 rehabilitation drawings, it appears that the wood system is constructed with ¾" treated tongue-and-groove plywood over 2x4 sleepers spaced at 24 inches on-center (Figure 14). The wood sleepers bear on top of 6" x 6" x ¾" thick rubber isolation pads at 12 inches on-center. The grade and species of the plywood and wood sleepers was not indicated on the drawings. The plywood appears to be, overall, in poor condition, showing signs of delamination of the plywood plies and separation at the joints.

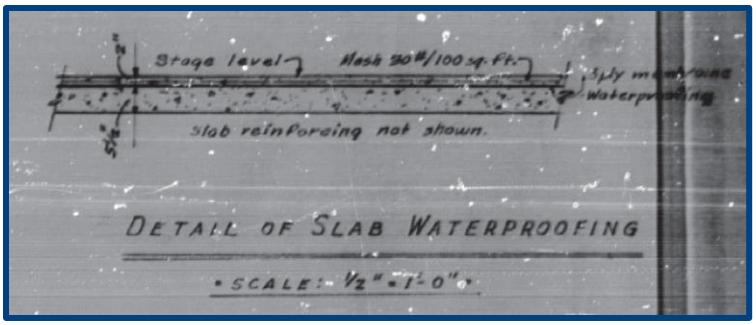

Figure 11: 1950s original drawings indicating a 2-inch topping over the concrete stage floor.

Figure 12: Core sample does not contain a 2-inch topping over the waterproofing membrane.

Figure 11: Painted wood sleeper system at the back of the stage.

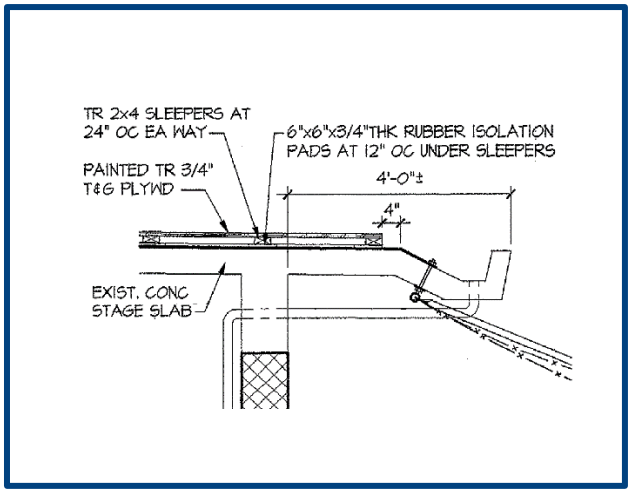

Figure 14: Existing wood sleeper system installed during 2001 rehabilitation work.

PATHWAY ABAAS/ADA COMPLIANCE

As the pathway is presently marked as an ABAAS/ADA accessible route and leads to priority seating areas, the pathway would be considered an *accessible route* (as defined by the 2010 ADA Standards for Accessible Design). Therefore, the pathway can be considered as one of two possibilities; a *ramp,* or only a generic *walking surface*. It seems the pathway most appropriately falls under a generic *walking surface* (a *ramp* is essentially a steeper *walking surface*, with stricter requirements). The table below shows a basic side-by-side comparison of requirements between a *ramp* and a *walking surface*:

Accessible Routes *§402 ADA*	
Walking Surface *§403*	Ramp *§405*
running slope ≤ 1:20	*running slope* ≤ 1:12
cross slope ≤ 1:48	*cross slope* ≤ 1:48
Handrails not required	Handrails required on both sides (*§505* for handrail requirements)
Edge protection not required	Edge protection required on both sides
Clear width ≥ 36”	Clear width ≥ 36”
If clear width is ≤ 60”, a 60” x 60” *passing zone* must be provided at every 200 feet*	Landings required at every 30” of rise, changes in direction, and at the start and end of the *ramp**

* For *walking surfaces*, no specific requirements at turns except at 180-degree turns; whereas a *ramp* requires a landing at any change in direction.

On August 25, 2016, JMT performed a field topographic survey on the pathway (Appendix A) . The *running slopes* and *cross slopes* were calculated using the rise and runs from survey point – to – survey point (Appendix B). Any slope that did not meet the requirements is highlighted in yellow (Figure 15 is a picture taken to depict the path’s *cross slope*). This cross slope is typical along the length of the pathway and more pronounced at the switchback. Measured and surveyed conditions of the pathway indicate the following:

1. Running Slope(s) ranging from 1:5 to 1:43

    a. Approximately 160 linear feet (60%) of the 270-foot pathway is sloping greater than the 1:20 requirement. (Reference Table 1016.7.1 Maximum Running Slope and Segment Length ABAAS).

2. Cross Slope(s) ranging from 1:11 to 1:45 (100%) not meeting the 1:48 requirement. (Reference 1016.7.2 Cross Slope ABAAS).

3. The turning (switchback) space slope is steeper than 1:48 (Reference ABAAS 304.2).

Figure 15: Depiction of cross slope at the bend. Clearance at the sticks is approximately 3 inches (a 1:48 cross slope for a 4-foot wide path equals 1 inch).

Based on the survey, the pathway currently does not meet the *walking surface* (and therefore *ramp*) slope requirements per ABAAS/ADA. Furthermore, since the pathway has a clear width ≤ 60 inches (5 feet), and runs longer than 200 feet, the pathway will need a *passing zone* at some location – preferably within the middle third. Therefore, for the pathway to be considered as an *accessible route*, additional work needs to be performed. This will most likely entail demolishing the existing asphalt surface, regrading, and repaving. Adding railings alters the pathway, and therefore, if the railings are added, the pathway must be brought into compliance with ABAAS/ADA Standards.

CONCLUSIONS AND RECOMMENDATIONS

STAGE

The previous report prepared by Protection Engineering Group, Chantilly, VA, February 2014, indicated that there was a concern for the performance of the stage floor structure due to observed damage such as spalling, cracking, and calcification which could result in internal corrosion of the reinforcing due to chloride levels in the concrete, as high chloride levels were recorded. This report recommended the following for the stage floor:

1. Full depth concrete replacement of the 6-inch south proscenium concrete slab and adjacent beams.

2. Full depth concrete replacement of the chloride contaminated concrete at the front of the stage including its front edge.

Structural calculations (Reference Appendix E, *Structural Calculations*) for the stage load assessment indicate that the concrete floor structure is not able to support the current code required applied live load based on the mechanical shear properties, and shear design strength of the stage floor structure itself.

Revisions, alterations, or certifications for the addition(s) of loads to the stage area for the use of stage lighting, sound equipment, stage constructions, etc. would require analysis of the existing supporting structure to determine if the structure could support the loads. The analysis would then show an immediate overstress condition with the application of the revisions, alterations, or additions and would not be incompliance with Chapter 34 of the IBC Code in which it defers to the International Existing Building Code (IEBC). The International Existing Building Code applies to matters governing the repair, alterations, change of occupancy, additions to and relocation of existing structures which include the application of or certification for new loads.

As loads are applied and add to the current loads of the stage floor structure and alter its behavior, the IEBC would consider this an “Alteration” and require the Owner to have a structural analysis of the existing building made to determine the adequacy of the structural systems for the proposed alteration. Furthermore, the IEBC requires the analysis be performed to the current Codes and Standards and may not be grandfathered to previous Codes and Standards. The analysis must consider current Code seismic, live, and other loads in combination with the applied dead loads. JMT’s analysis finds the following:

1. The structural analysis presented in Appendix E, *Structural Calculations*, is based on current Codes and Standards (ACI 318-14), as is required by IBC/IEBC, and shows little to no available transient or live load additional capacity. This is non-compliant with the 2015 IBC, Chapter 16, Table 1607.1 for stage floors. Per our findings, any assignment of additional point loads or distributed loads, in any form, is not recommended without implementing some regimen of strengthening.

2. The structure is, and has been operating, above the allowable design capacities as determined by current ACI 318-14 and IBC 2015 Codes and Standards when subjected to current and/or any additional transient live loads in any form. Therefore, it is recommended that no further point loads or transient live loads be applied until action is taken to address the shear overstresses.

3. Structural analysis based on a historic Allowable Stress Design (ASD) procedure seems to indicate that the concrete strength participating in shear may have been appropriately designed back in the 1950s. Some shear reinforcement seems to have been spaced to the limits at the time and by our engineering judgement appears to be spaced too far apart in some instances to be effective.

4. It is recommended that carbon fiber wrap be installed to strengthen and harden the structure for shear to allow for the application of additional loads and effectively support the code applied superimposed transient stage live loads. An example can be seen in Figure 16 below. Other solutions are available, such as installing new columns, increasing the beam cross sections, or removing and rebuilding sections of the stage. These alternate solutions, however, may not be as cost effective as installing a carbon fiber wrap system.

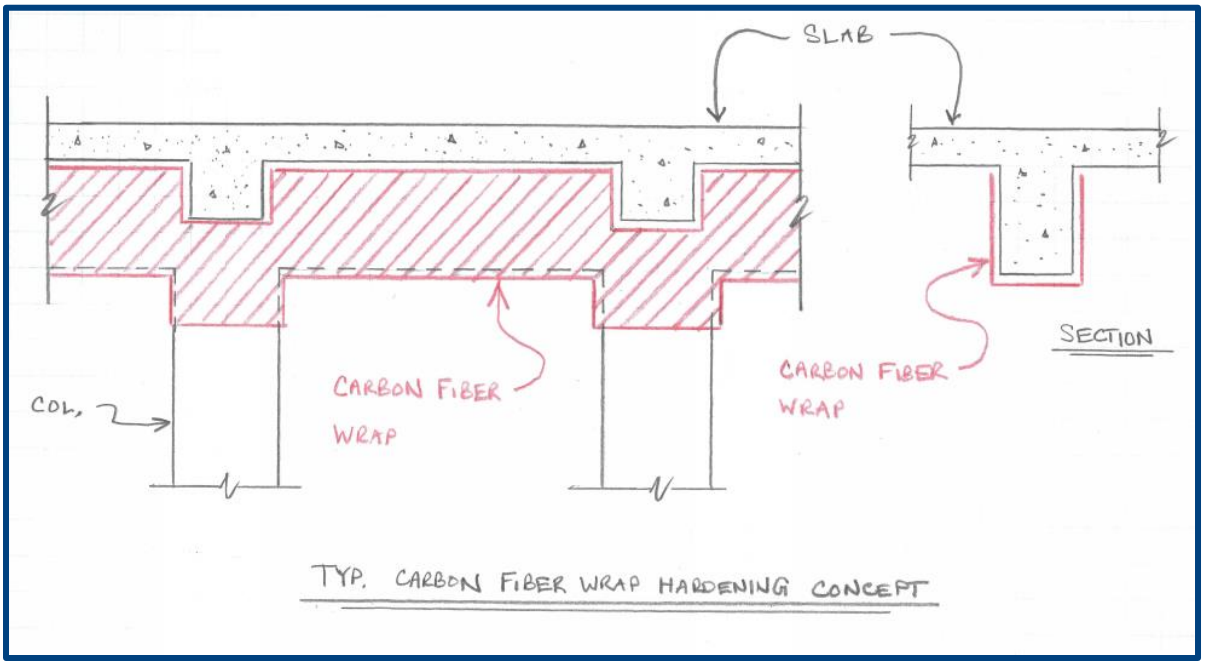

Figure 16: Carbon Fiber Wrap Example

5. Any spalls should be repaired with typical concrete repair practices.

6. The undermining of the stair landings should be repaired. A concrete or masonry foundation wall should be constructed, and the remaining voids grouted with a low-pressure system.

7. The recommendations presented in the Protection Engineering Group, Chantilly, VA, dated February 2014, should be implemented and the areas noted in this report should also be repaired, replaced and/or reinforced.

8. The slab in-fills show exposed and rusted reinforcing, as may be attributed to water infiltration, and do not offer or provide for a continuous monolithic slab system due to their attachment system to the existing beams. The in-fills also altered the original loads to the supporting beams and have increased the overall applied loads to the existing structure. Therefore, the in-fills should be removed and replaced with a new system integrated into the existing structure, strengthened to accommodate the in-fill areas.

Removing and replacing the infill areas with a lighter system without strengthening the surrounding system would not reduce the applied load sufficiently enough to avoid strengthening the structural system. This is due to the net difference in the reduction of about 10 psf to 15 psf would not be enough to overcome the limiting state stress ratios for shear. Reference structural calculations page 48)

9. Observations of the plywood floor system show signs of delamination of the plies and separations at the joints. The wood floor system has been exposed to weather since it was installed circa early 2001, which would make it approximately 15+ years old. The grades or species of the wood system could not be determined as would be needed to define the strength properties of the system. However, it is likely weaker than the supporting concrete structure, which as discussed, cannot be certified for any live loads without strengthening the concrete system. Therefore, at the time of strengthening the concrete, it is also recommended to remove and replace the plywood and wood sleeper system.

As discussed, and based on current Codes, the structural load analysis indicates the structure is currently subjected to forces and stresses above its allowable design capacity in shear strength solely with the dead load of the structure. Therefore, subjecting the stage area to additional live load for any type of Code defined or classified use is not recommended. Further use of the structure as a stage, as the current Code requires a 150 psf live load, should be suspended until at such time the structure can be, replaced, supplemented, or strengthened and hardened to allow for the application of stage loads.

As the stage floor was constructed in the 1950s, it is approximately 65 to 70 years old and quickly approaching the end of its use. Also, as demonstrated by structural calculations, it does not meet current Codes and Standards for use or construction. Therefore, it is recommended that:

1. The structural load indicates the stage floor structure is currently subjected to forces and stresses above its allowable design capacity, therefore, the NPS should suspend operations on the structure as would be defined by any of the IBC, Chapter 3, Use and Occupancy Classifications until the structure can be replaced, or strengthened and repaired.
2. The NPS should consider implementing a temporary shoring systems as soon as possible to provide positive control of the structure and mitigate the uncertainly of the behavior of the structure.
3. The structure could be removed and replaced, or strengthened and repaired. While conceptual design of these systems is beyond the scope of this report, general methods would include:
    a. Complete replacement would first involve the demolition of the monolithically poured concrete frame consisting of the concrete slab, beams, and columns and footings. Removal of the stage area would also remove the damaged concrete that was noted in the form of spalling, cracking, and calcification. A new structure could then be built.
        i. This option should be considered as the complete removal and replacement of the stage would warrant a new stage structure fully designed to current Codes and Standards and provide for a new 75 to 100-year structure.

ii. This option allows for the un-imposed construction and direct account of quantities and costs. These types of projects may be bid on a lump sum amount as the scope of construction may be quantified based on the demolition and replacement construction documents.
iii. For comparison, a preliminary order of magnitude estimate for removal and replacement could be $520,000 to $620,000.

b. As previously discussed, installing the carbon fiber wrap and repair of the damaged areas, would strengthen and repair the structure to allow for the application of additional loads and effectively support the Code applied superimposed transient stage live loads.

i. This option may be considered as it allows for the existing structure to remain in place. Complete strengthening and repair could result in a fully rehabilitated stage with a 50 to 75-year structure.
ii. Repair projects of this type have in-direct costs and with cost changes during construction. Normally, concrete repair projects are bid based on estimated quantities with individual bid items extended from the contractor's unit prices.
iii. For comparison, a preliminary order of magnitude estimate for carbon fiber and repair could be $460,000 to $560,000.

4. Other solutions may be available, such as installing new columns, increasing the beam cross sections, or removing and rebuilding sections of the stage to increase the available live load. These alternate solutions, however, may not be as cost effective as installing a carbon fiber wrap system, or provide for the same use full life as complete demolition and replacement.

5. Planning for the future work is recommended to further define and detail project requirements, direction, schedule, scope, costs, and funding.

PATHWAY AND RAILINGS

1. As shown in Appendix B, *Lower Path Slope Calculations*, the entire pathway does not meet ABAAS/ADA requirements for the cross slope. Furthermore, about 60-percent of the pathway exceeds the running slope requirements.

2. The existing pathway cannot be endorsed as ABAAS compliant or ADA accessible. For the pathway to be endorsed as ABAAS/ADA compliant, it will need to be reworked, regraded, and repaved, regardless if the pathway is to be considered a walking surface or a ramp.

3. Drawings, specifications, a Class A cost estimate, and a proposed schedule for construction for new handrails have been supplied to the NPS. However, this design does not compensate for the non-compliance of the pathway and should not be construed as voluntary assumption by JMT that the pathway with the addition of the railings will meet ABAAS/ADA requirements. Adding railings without correcting the pathway slope does not correct the noncompliant running and cross slope issues. Even though the drawings supplied detail handrails able to resist the applied loads, as required by IBC, they cannot be ABAAS/ADA compliant due to the non-compliant slope of the pathway and should not be installed without correcting the pathway.

APPENDIX A

EXISTING CONDITIONS – TOPOGRAPHIC WORKSHEET

LEGEND

- ELEC. MANHOLE
- SANITARY SEWER MH
- TRAVERSE
- WATER VALVE
- WALL
- 215 CONTOUR
- HANDRAIL – METAL

GENERAL NOTES

1. THE IMPROVEMENTS SHOWN HEREON ARE BASED ON A FIELD–RUN TOPOGRAPHIC SURVEY PERFORMED BY JOHNSON, MIRMIRAN & THOMPSON (JMT) ON AUGUST 25, 2016, AND REFLECTS SITE CONDITIONS AS OF THAT DATE.
2. COORDINATES AND ELEVATIONS ARE ON AN ASSUMED DATUM.
3. ADDITIONAL SPOT ELEVATIONS RESIDE IN THE ELECTRONIC VERSION OF THIS DRAWING BUT ARE NOT PLOTTED HEREON.

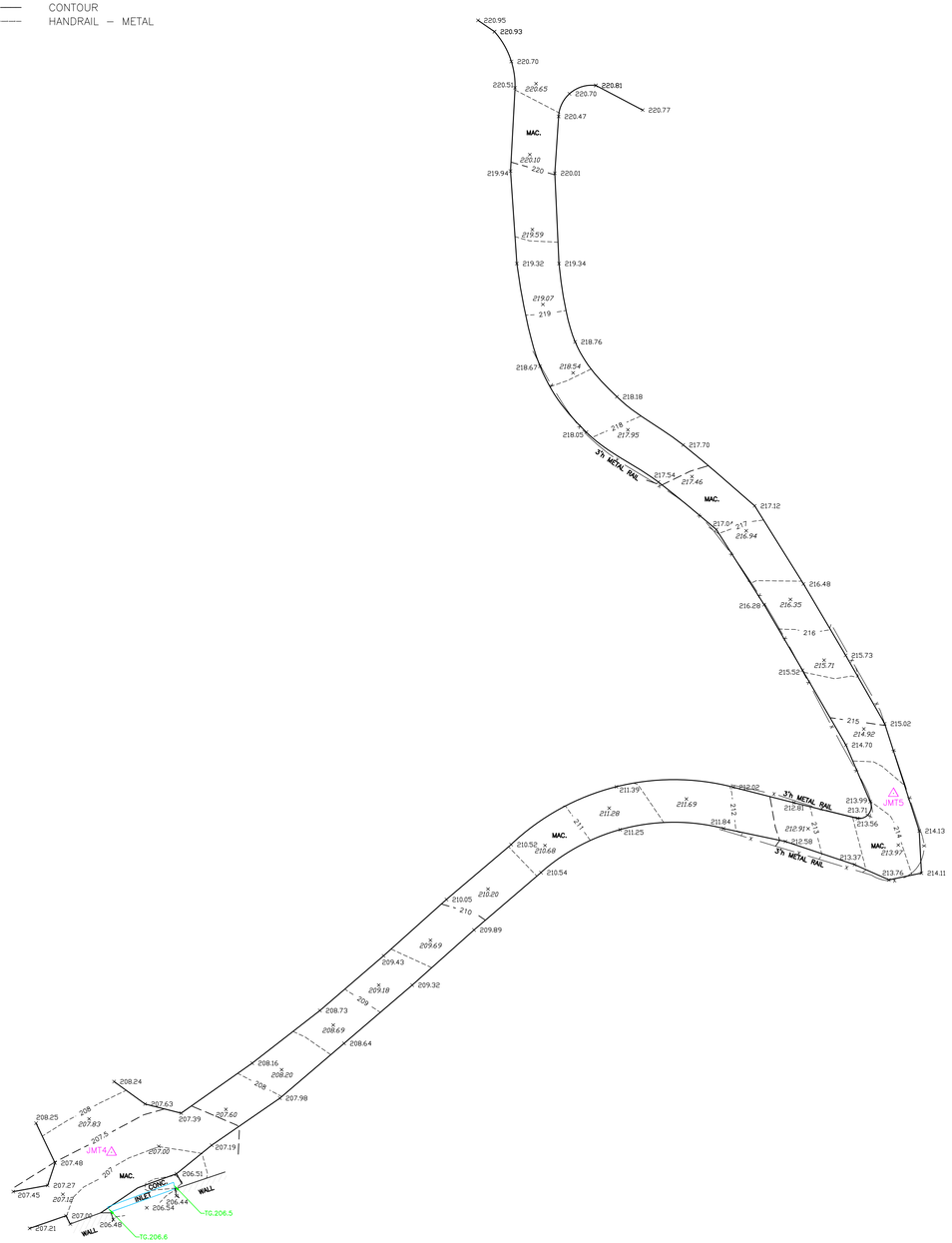

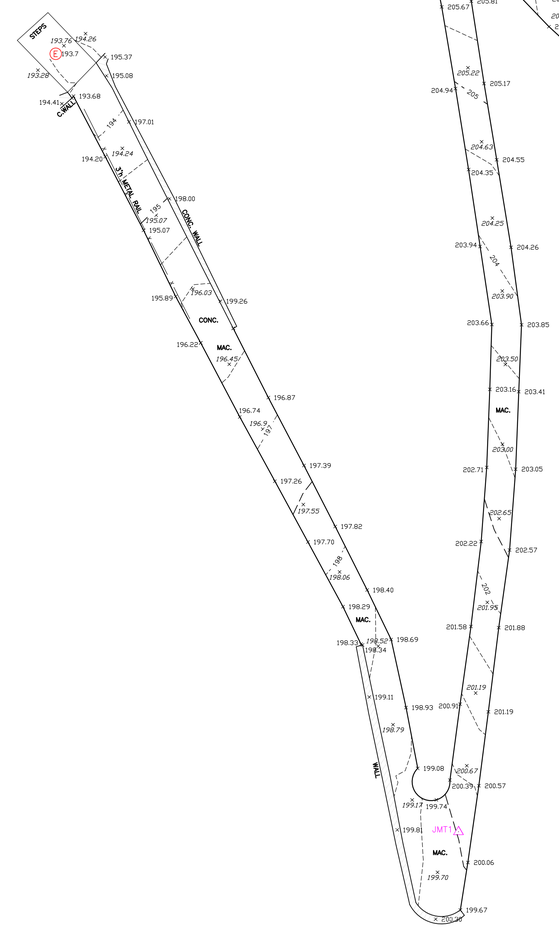

J.M.T. SURVEY TRAVERSE CONTROL COORDINATE TABLE

POINT	NORTHING	EASTING	ELEV.	DESCRIPTION
JMT1	5000.00	10000.00	200.00	TRAVERSE, MAGNAIL
JMT2	5125.02	10000.00	206.34	TRAVERSE, MAGNAIL
JMT3	5183.64	9981.81	206.05	TRAVERSE, MAGNAIL
JMT4	5245.00	9741.18	207.08	TRAVERSE, MAGNAIL
JMT5	5295.24	9850.68	214.18	TRAVERSE, MAGNAIL

0 10 20 30
GRAPHIC SCALE
1" = 10'

JMT.
72 Loveton Circle Baltimore, Maryland 21152-0949

Revisions

Seal:

Prepared For:

NATIONAL PARK SERVICE

CARTER BARRON AMPHITHEATRE

Project:

STAGE LOAD ASSESSMENT & ACCESSIBLE HANDRAIL INSTALLATION

Drawing Title:

EXISTING CONDITIONS TOPOGRAPHIC WORKSHEET

Site:

4850 COLORADO AVE NW, WASHINGTON, DC 20011

Scale: 1" = 10'
Date: 8/30/16
By: J.FELDMAN

Job No. 13-1429-010

Sheet No. 1 of 1

JMT: Q:\SMD\131429_010_Carter_Barron_Amphit\CADD\Surveys\DWG\VF_CARTER-BARRON-SRVY.dwg

APPENDIX B

LOWER PATH SLOPE CALCULATIONS

KEY

RUN
RISE
SLOPE

X.XX / XX.XX (1 : XX.XX)

SURVEY POINT

DIRECTION OF INTEREST (SLOPING DOWN)

SURVEY POINT

NOTES:

1. CALCULATED SLOPES HIGHLIGHTED IN YELLOW DO NOT MEET THE RUNNING OR CROSS SLOPE REQUIREMENTS FOR A "WALKING SURFACE."
2. THIS "ACCESSIBLE ROUTE" IS MOST APPROPRIATELY CONSIDERED AS A "WALKING SURFACE", AS OPPOSED TO A "RAMP."
3. THIS "WALKING SURFACE" IS GREATER THAN 200 FEET LONG, AND HAS A WIDTH ≤ 60" (5 FEET); THEREFORE, WILL REQUIRE A PASSING ZONE.

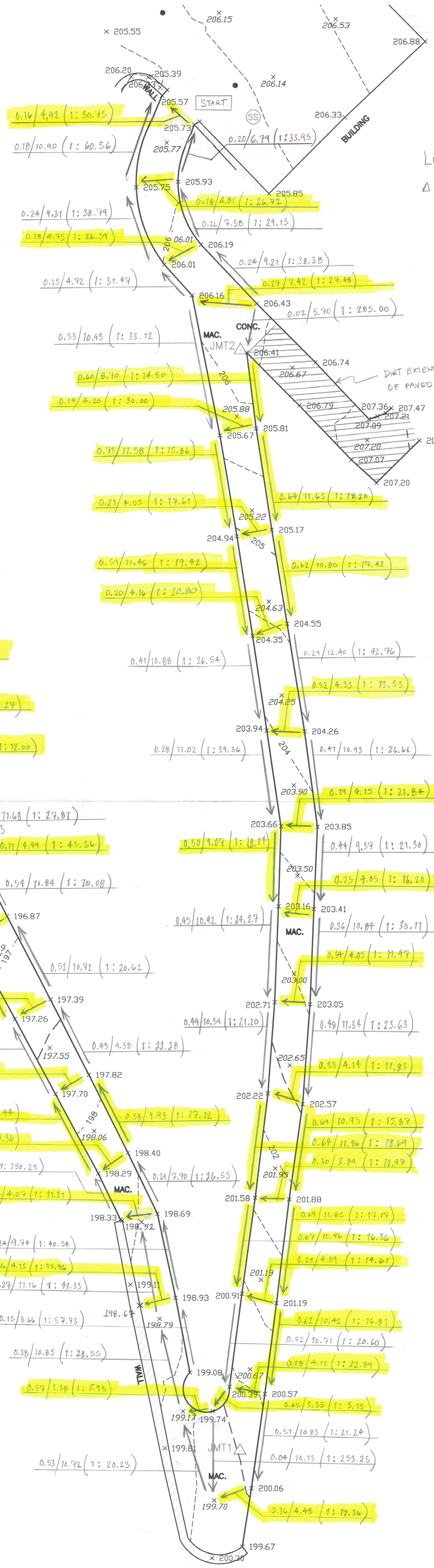

LOWER PATH

LENGTH ≈ 270 FT
Δ ELEVATION ≈ 12 FT
FROM START TO END

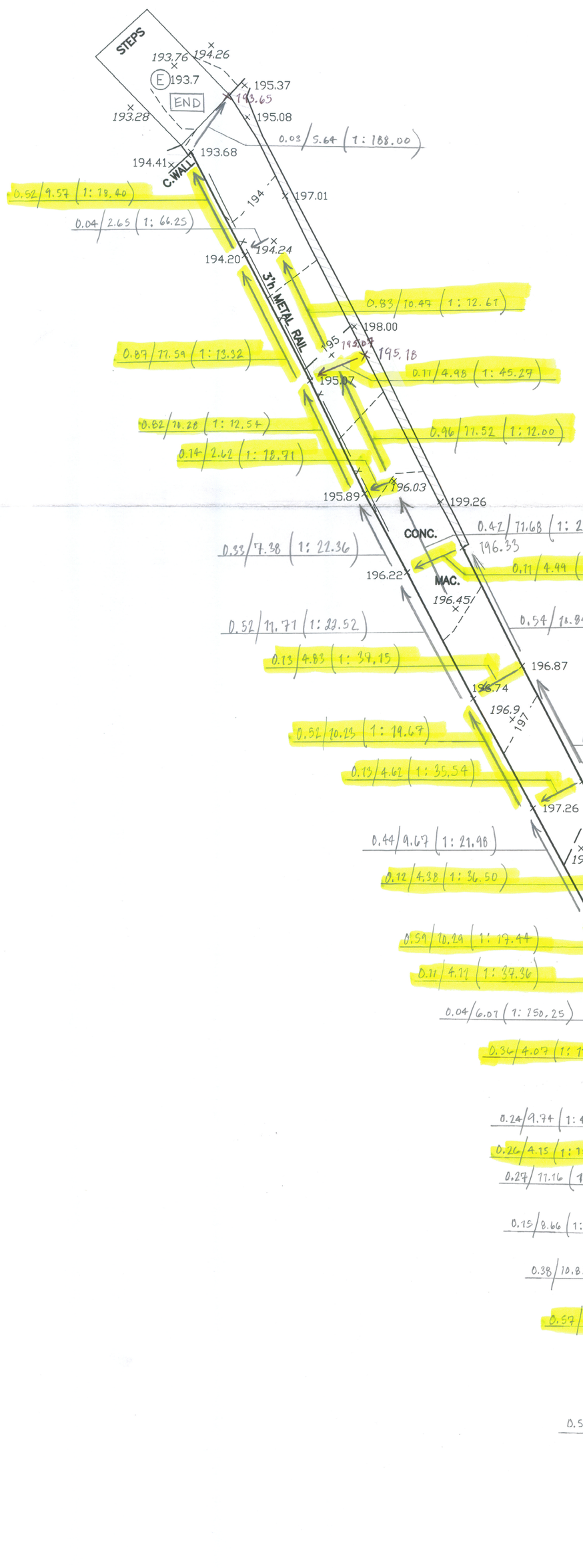

APPENDIX C

EXISTING STAGE FRAMING PLAN AND DETAILS

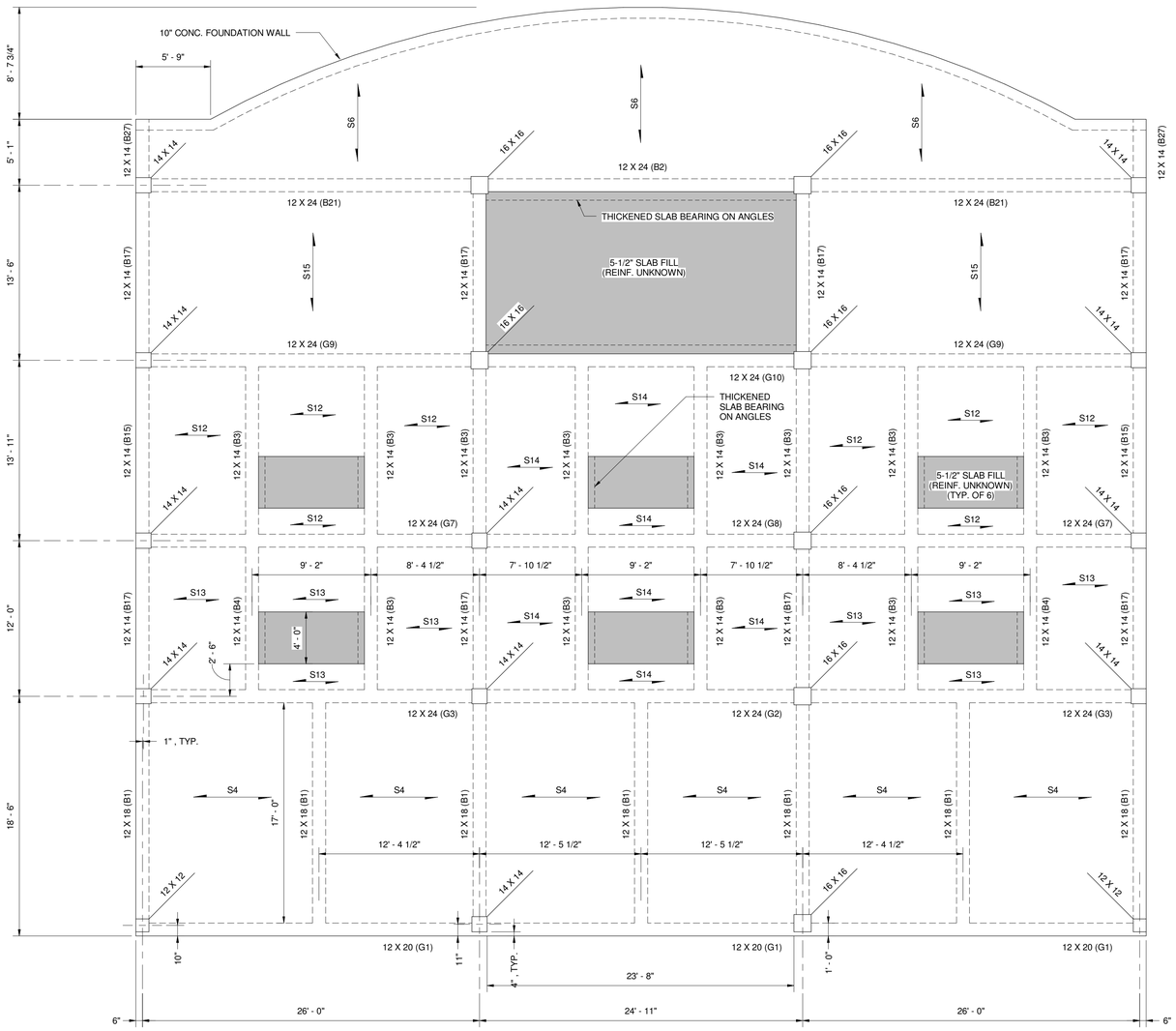

1 SK-01 EXISTING STAGE FRAMING PLAN AND SCHEDULES
3/16" = 1'-0"

CONC. SLAB SCHEDULE

MARK	DEPTH	REINFORCEMENT SIZE	REINFORCEMENT SPACING	REMARKS
S4	5.5"	1/2°	7"	ALTERNATE BARS BENT
S6	5.5"	1/2°	6"	ALTERNATE BARS BENT
S12	5.5"	1/2°	7"	ALTERNATE BARS BENT
S13	5.5"	1/2°	7"	ALTERNATE BARS BENT
S14	5.5"	1/2°	7"	ALTERNATE BARS BENT
S15	5.5"	1/2°	6"	ALTERNATE BARS BENT

CONC. BEAM AND GIRDER SCHEDULE

MARK	WIDTH	DEPTH	REINFORCEMENT STR. NO.	REINFORCEMENT STR. SIZE	REINFORCEMENT BENT NO.	REINFORCEMENT BENT SIZE	STIRRUPS SIZE	STIRRUPS SPACING EACH	STIRRUPS SPACING END	REMARKS
G1	12"	20"	2	1°	2	1°	3/8°	2 @ 12", THEN 18"		BARS IN 2 LAYERS
G2	12"	24"	2	1°	2	1-1/8°	3/8°	3 @ 8", 7 @ 12"		BARS IN 2 LAYERS
G3	12"	24"	2	1-1/8°	2	1°	3/8°	4 @ 8", 7 @ 12"		BARS IN 2 LAYERS
G7	12"	24"	2	1°	2	1°	3/8°	4 @ 8", 7 @ 12"		BEND BARS AT 1/5 POINT BARS IN 2 LAYERS
G8	12"	24"	2	1°	2	1°	3/8°	4 @ 8", 7 @ 12"		BEND BARS AT 1/5 POINT BARS IN 2 LAYERS
G9	12"	24"	2	1°	2	1°	3/8°	4 @ 8", 7 @ 12"		BEND BARS AT 1/5 POINT BARS IN 2 LAYERS
G10	12"	24"	2	1°	2	1°	3/8°	4 @ 8", 7 @ 12"		BEND BARS AT 1/5 POINT BARS IN 2 LAYERS
B1	12"	18"	2	1°	2	1°	3/8°	2 @ 6", 3 @ 8", 2 @ 12"		
B2	12"	24"	2	1°	2	1°	3/8°	5 @ 6", 4 @ 8", 3 @ 12"		BARS IN 2 LAYERS
B3	12"	14"	2	3/4°	2	3/4°	1/4°	3 @ 8"		
B4	12"	14"	2	3/4°	2	3/4°	1/4°	3 @ 8"		
B15	12"	14"	2	7/8°	2	7/8°	1/4°	5 @ 6", 3 @ 8", 1 @ 12"		
B17	12"	14"	2 - 7/8Ø TOP 2 - 7/8Ø BOTTOM				1/4°	3 @ 8"		
B21	12"	24"	2	1°	2	1°	3/8°	5 @ 6", 4 @ 8", 3 @ 12"		BARS IN 2 LAYERS
B27	12"	14"	2 - 3/4Ø TOP 2 - 3/4Ø BOTTOM				1/4°	2 @ 6"		

NOTES:

1. DESIGN LIVE LOAD STAGE FLOOR = 1OO PSF.
2. FOOTINGS DESIGNED FOR 4000 PSF SOIL PRESSURE.
3. CONCRETE TO BE CLASS B (F'c = 2500 PSI).
4. REINFORCING STEEL TO BE INTERMEDIATE GRADE (Fy allowable = 20 KSI).
5. COVER FOR REINFORCINGS SHOWN ON TYPICAL DETAILS.

SHEET NOTES:

1. ALL INFORMATION SHOWN HEREIN IS A COMBINATION OF REPRODUCING EXISTING *DRAWING NO. 55.9-41-S1A, DATED 3/14/50*, AND FIELD OBSERVATIONS.

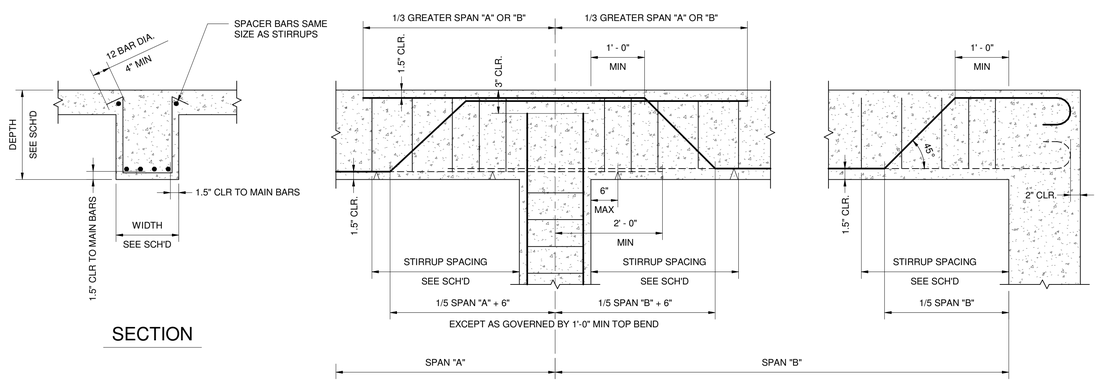

2 SK-01 TYPICAL BEAM DETAIL
3/4" = 1'-0"

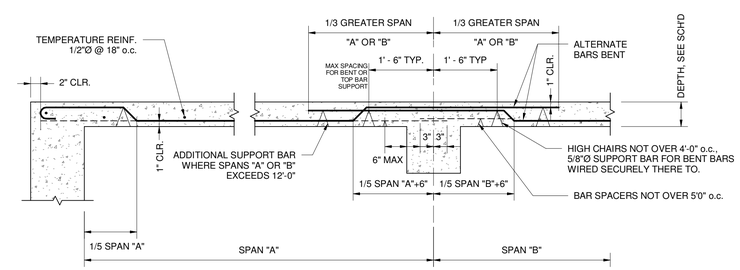

NOTE: STRAIGHT AND BENT BARS SHALL ALTERNATE. BENTS BARS FROM ADJACENT SPANS SHALL BE STAGGERED OVER SUPPORTS.

3 SK-01 TYPICAL SLAB DETAIL
3/4" = 1'-0"

JOHNSON, MIRMIRAN & THOMPSON
Engineering A Brighter Future®
72 Loveton Circle
Sparks, Maryland 21152
phone / 410.329.3100
fax / 410.472.2200
www.jmt.com

CARTER BARRON AMPHITHEATER
STAGE LOAD ASSESSMENT & ACCESSIBLE HANDRAIL INSTALLATION

seal:

Professional Certification. I hereby certify that these documents were prepared or approved by me, and that I am a duly licensed professional engineer under the laws of the State of Maryland.
License Number:
Expiration Date:

job number	13-1429-010
scale	As indicated
drawn by	NLL
checked by	JHB
DATE	11/8/2016

no.	date	issue

sheet title:
EXISTING STAGE FRAMING PLAN AND DETAILS

sheet number:
SK-01

APPENDIX D

SPALL & CORING LOCATIONS, AND REBOUND HAMMER STATISTICS

SPALL LOCATIONS & REBOUND HAMMER STATISTICS (W/ CORING LOCATIONS)

$$\sigma = \sqrt{\frac{1}{n}\sum_{i=1}^{n}\left(Q_i - Q_{avg}\right)^2}$$

REBOUND HAMMER NO., Q

COL 3.	COL. 9	COL. 15
61.5	64.5	68.0
68.0	66.5	62.5
67.0	65.0	69.5
66.5	66.0	66.5
69.0	68.0	71.0
65.0	68.5	66.0
63.0	71.5	59.0
70.0	69.0	62.5
66.0	69.5	70.5
69.0	68.5	63.5

$Q_{avg} = 66.7$

↳ STANDARD DEVIATION,

$\sigma = 2.988$

↳ COEFFICIENT OF VARIENCE,

$$C_v = \frac{2.988}{66.7} \times 100\,\%$$

$C_v = 4.48\% \leq 10\%$

ACCEPTABLE % PER ACI 228.1 R-03

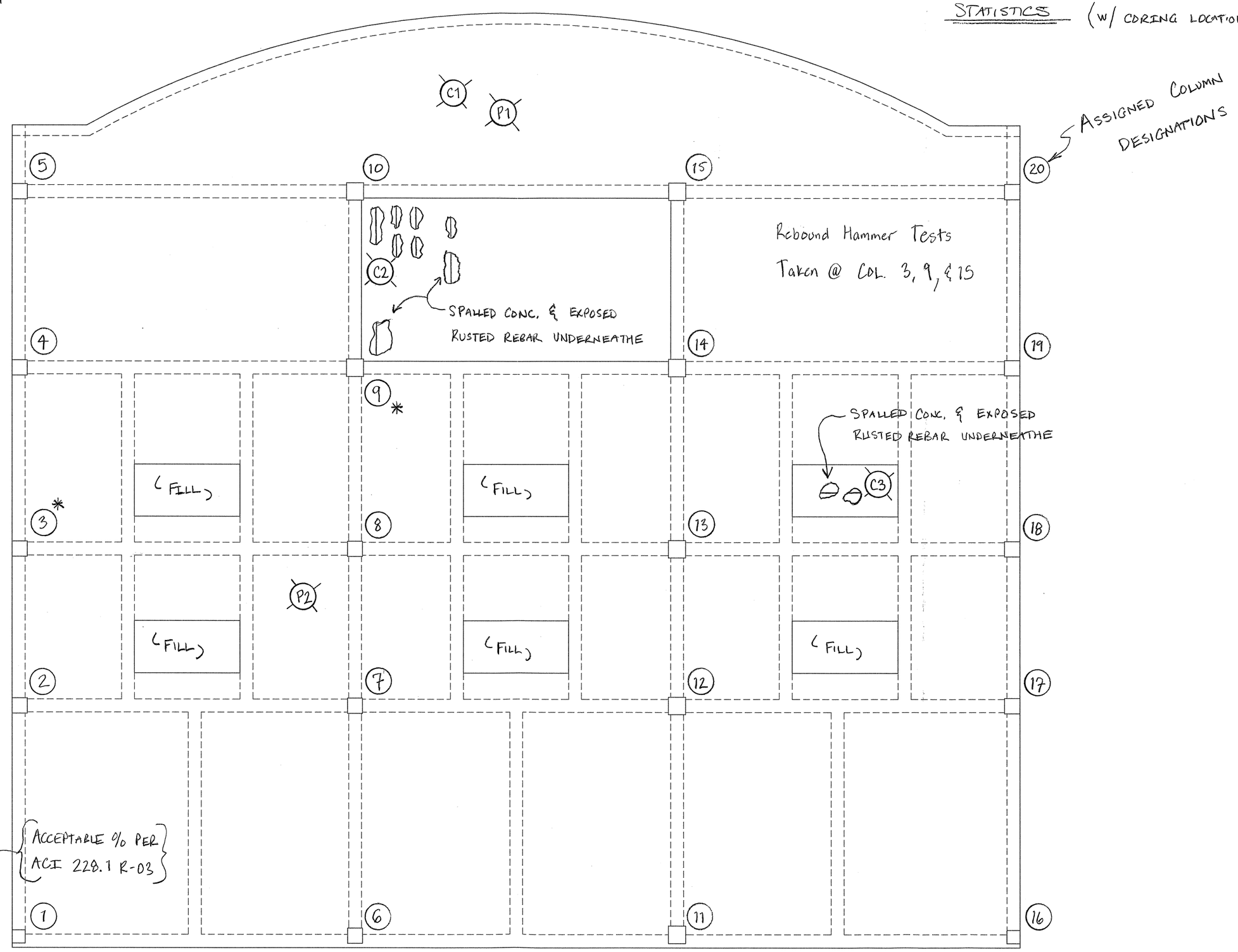

APPENDIX E

STRUCTURAL CALCULATIONS

Engineering A Brighter Future

CARTER BARRON AMPHITHEATER

STAGE LOAD ASSESSMENT & ACCESSIBLE HANDRAIL INSTALLATION

STRUCTURAL CALCULATIONS

JMT Project No: 13-1429-010
IDIQ Contract No: P14PC00241
PMIS Nos: 196825C & 149668A

Prepared By: NLL

Checked By: JHB

Date: November 11, 2016

Engineering A Brighter Future

TABLE OF CONTENTS

CODE ANALYSIS AND DESIGN LOADS....3

STAGE FRAMING STRENGTH CALCULATIONS....6

MOMENT OF INERTIA FACTORS....7

BEAMS....9

SLABS....30

LATERAL ANALYSIS & COLUMN CHECK....32

STAGE FRAMING DESIGN STATUS (100 PSF LIVE LOAD)....47

SAMPLE CALCULATIONS PER ACI 318-56....79

HANDRAIL CALCULATIONS....82

REFERENCES....85

Engineering A Brighter Future

CODE ANALYSIS AND DESIGN LOADS

Project CARTER BARRON AMPHITHEATER

Subject CODE ANALYSIS & DESIGN LOADS

Job No. 13-1429-010

Sheet No. 1 of 2

Computed By NLL Date 11/9/16 Checked By _____ Date _____

4850 COLORADO AVE NW

WASHINGTON, DC 20011

LAT = 38.951334

LONG = -77.037856

SEISMIC PARAMETERS

RISK CATEGORY = II

SITE CLASS = D

SEISMIC DESIGN CATEGORY = B

$S_{DS} = 0.127g$

$S_{D1} = 0.082g$

SEE "USGS DESIGN MAPS" REPORTS IN THE REFERENCES.

$R = 3$

$C_d = 2\frac{1}{2}$

ORDINARY CONCRETE MOMENT-RESISTING FRAME

$C_s = \frac{0.127}{3} = 0.0423$

- 4430 SF SLAB $\left(150 \times 5.5/12\right) \approx 306^k$
- WT OF BEAMS = 196^k

$\Sigma = 502^k$

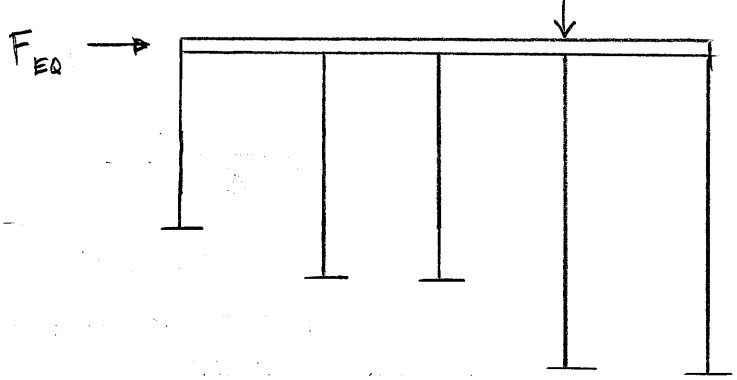

$F_{EQ} = 0.0423(502)$

$= 21.25^k$

Project CARTER BARRON AMPHITHEATER
Subject CODE ANALYSIS & DESIGN LOADS
Job No. 13-1429-010
Sheet No. 2 of 2
Computed By NLL Date 11/9/16 Checked By _____ Date _____

DESIGN LOADS:

- LIVE LOAD = 100 PSF
- SNOW LOAD = 25 PSF ← SEE "ATC SNOW LOADS" IN REFERENCES
- DEAD LOAD:

γ_{conc} = 145 PCF

LOAD COMBINATIONS {PER ASCE 7-10}

1.) 1.4 D

2.) 1.2 D + 1.6 L ~~+ 0.5 S~~

Because of the nature of this project, it is highly unlikely an event will take place w/ the stage full of snow

~~3.) 1.2 D + 1.6 S + 0.5 (L or 0.5 W)~~

By inspection, this load combo will not control

~~4.) 1.2 D + 1.0 W + 1.0 L~~

5.) 1.2 D ± 1.0 E + L + 0.2 S

~~6.) 0.9 D + 1.0 W~~

WIND LOADS DO NOT APPLY TO THE STAGE STRUCTURE

7.) 0.9 D ± 1.0 E

Engineering A Brighter Future

STAGE FRAMING STRENGTH CALCULATIONS

Project CARTER BARRON AMPHITHEATER
Subject I_g FACTORS
Job No. 13-1429-010
Sheet No. 1 of 2
Computed By NLL Date 11/7/16 Checked By _____ Date _____

COLUMNS

All columns to be $\boxed{0.70\, I_g}$ {Table 6.6.3.1.1(a) ACI 318-14}

BEAMS

$$0.25\, I_g \le \left(0.10 + 25\rho_{prov}\right)\left(1.2 - 0.2\frac{b_w}{d}\right) I_g \le 0.50\, I_g$$

{Table 6.6.3.1.1(b) ACI 318-14}

- BEAM G1

$$\left(0.10 + 25 \times 0.0196\right)\left(1.2 - 0.2 \times \frac{12}{17}\right) I_g = 0.53\, I_g$$

↳ ∴ Use $\boxed{0.50\, I_g}$

- BEAM G2 & G3

$$\left(0.10 + 25 \times 0.018\right)\left(1.2 - 0.2 \times \frac{12}{21}\right) I_g = 0.60\, I_g$$

↳ ∴ Use $\boxed{0.50\, I_g}$

- BEAM G7, G8, G9, G10, B2 & B21

$$\left(0.10 + 25 \times 0.0159\right)\left(1.2 - 0.2 \times \frac{12}{21}\right) I_g = 0.54\, I_g$$

↳ ∴ Use $\boxed{0.50\, I_g}$

Project CARTER BARRON AMPHITHEATER

Subject I_g FACTORS

Job No. 13-1429-010

Sheet No. 2 of 2

Computed By NLL Date 11/7/16 Checked By _____ Date _____

- BEAM B1

$$\left(0.10 + 25 \times 0.0165\right)\left(1.2 - 0.2 \times \frac{12}{16}\right) I_g = 0.54\, I_g$$

$\hookrightarrow \therefore$ Use $\boxed{0.50\, I_g}$

- BEAM B3 & B4

$$\left(0.10 + 25 \times 0.0122\right)\left(1.2 - 0.2 \times \frac{12}{12}\right) I_g = \boxed{0.41\, I_g}$$

- BEAM B15

$$\left(0.10 + 25 \times 0.0167\right)\left(1.2 - 0.2 \times \frac{12}{12}\right) I_g = 0.52\, I_g$$

$\hookrightarrow \therefore$ Use $\boxed{0.50\, I_g}$

- BEAM B17

@ MID SPAN $= \left(0.10 + 25 \times 0.0083\right)\left(1.2 - 0.2 \times \frac{12}{12}\right) I_g = 0.3\, I_g$

@ END SPAN $= 0.52\, I_g$ {SAME AS B15}{Both Ends}

$$I_{avg} = 0.70\, I_{mid} + 0.15\left(I_{END_1} + I_{END_2}\right)$$

$$= \left[0.70\left(0.3\right) + 0.15\left(0.52 + 0.52\right)\right] I_g = \boxed{0.37\, I_g}$$

- BEAM B27

$$\left(0.10 + 25 \times 0.0061\right)\left(1.2 - 0.2\, \frac{12}{12}\right) I_g = \boxed{0.25\, I_g}$$

BEAM G1

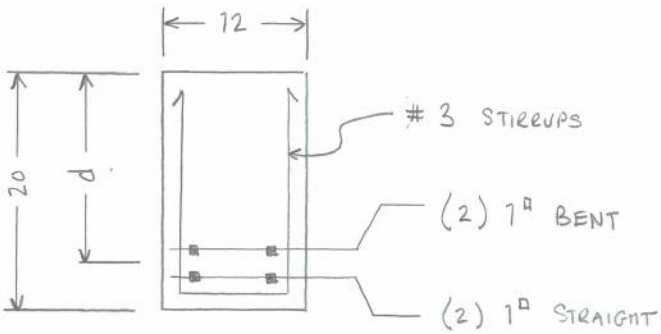

$f'_c = 4000$ psi

$F_y = 40$ ksi

$d = 20 - 1\tfrac{1}{2} - 1 - \tfrac{1}{2} = 17''$

CLR

FLEXURE

- POSITIVE BENDING:

$$A_s = 4(1) = 4 \text{ IN}^2 \longrightarrow \rho = \frac{4}{(12)(17)} = 0.0196 > \rho_{min} = \frac{200}{F_y} = 0.005$$

$$a = \frac{4(40)}{0.85(4)\,12} = 3.92'' \longrightarrow c = \frac{3.92}{0.85} = 4.61''$$

$$\epsilon_s = \frac{0.003}{4.61}\left(17 - 4.61\right) = 0.0081 > 0.005 \longrightarrow \therefore \phi = 0.9$$

$$\phi M_n^+ = 0.9\left[(4)(40)\left(17 - \frac{3.92}{2}\right)\right] \div 12 = \underline{\underline{+180.5 \text{ k}\cdot\text{ft}}}$$

- NEGATIVE BENDING (@ CONTINUOUS SPAN):

$$\phi M_n^- = \underline{\underline{-180.5 \text{ k-ft}}} \quad \{\text{OPPOSITE OF POSITIVE BENDING}\}$$

- NEGATIVE BENDING (@ END SPAN):

$$d = 20 - 1\tfrac{1}{2} - \tfrac{1}{2} = 18''$$

$$A_s = 2(1) = 2 \text{ in}^2 \longrightarrow \rho = \frac{2}{(12)(18)} = 0.0093 > \rho_{min} = 0.005$$

$$a = \frac{2(40)}{0.85(4)\,12} = 1.96'' \longrightarrow c = \frac{1.96}{0.85} = 2.31''$$

$$\epsilon_s = \frac{0.003}{2.31}(18 - 2.31) = 0.0204 \gg 0.005 \longrightarrow \therefore \phi = 0.9$$

$$\phi M_n^- = 0.9\left[(2)(40)\left(18 - \frac{1.96}{2}\right)\right] \div 12 = \underline{\underline{-102.1 \text{ k}\cdot\text{ft}}}$$

TORSION:

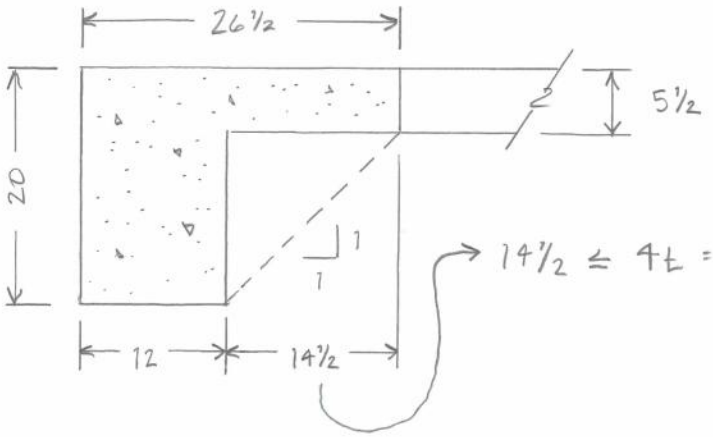

$$14\tfrac{1}{2} \leq 4t = 4(5\tfrac{1}{2}) = 22 \checkmark$$

$$A_{cp} = 5\tfrac{1}{2}(26\tfrac{1}{2}) + 12(14\tfrac{1}{2}) \approx 320 \text{ in}^2$$

$$P_{cp} = 20 + 12 + 2(14\tfrac{1}{2}) + 5\tfrac{1}{2} + 26\tfrac{1}{2} = 93 \text{ in}$$

Threshold Torsion

$$T_{th} = \sqrt{f'}\,\frac{A_{cp}^2}{P_{cp}} = \sqrt{4000}\,\frac{(320)^2}{93} \div 12000 = 5.80 \text{ k}\cdot\text{ft}$$

$$\phi T_{th} = 0.75(5.80) = \underline{\underline{4.35 \text{ k}\cdot\text{ft}}}$$

SHEAR :

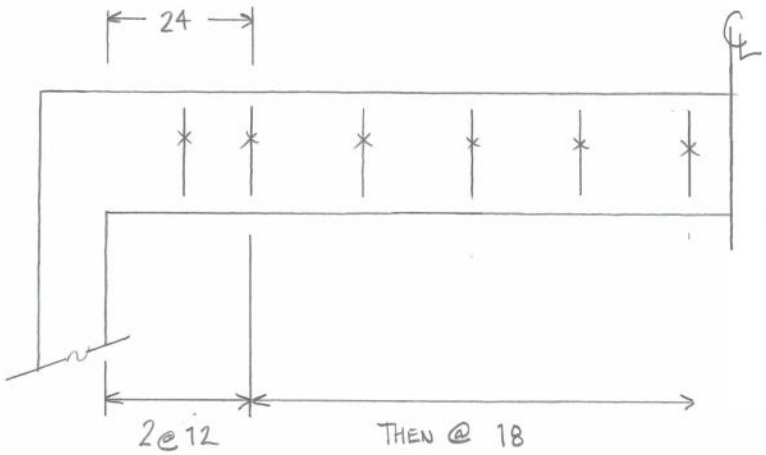

$d = 17''$

$S_{max} = \frac{d}{2} = \frac{17}{2} = 8\frac{1}{2}''$

∴ Since both stirrups spacings exceed the max, cannot include in the strength calcs

$V_c = 2\sqrt{4000}\,(12)(17) \div 1000 = 25.8^k$

$\phi V_n = 0.75\left[\frac{1}{2}(25.8)\right] = \underline{\underline{9.68^k}}$

BEAM G2

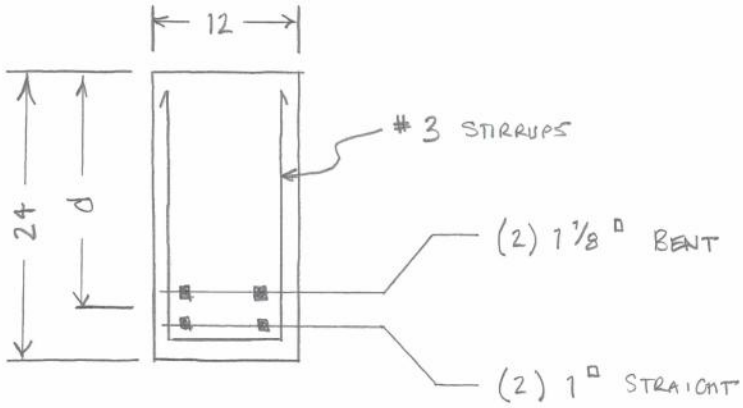

$d = 24 - 1\frac{1}{2} - 1 - \frac{1}{2} = 21''$

FLEXURE:

- POSITIVE BENDING

$$A_s = 4.53 \text{ in}^2 \longrightarrow \rho = \frac{4.53}{(12)(21)} = 0.018 > \rho_{min} = 0.005$$

$$a = \frac{4.43(40)}{0.85(4)\,12} = 4.34'' \longrightarrow c = \frac{4.34}{0.85} = 5.11''$$

$$\epsilon_s = \frac{0.003}{5.11}(21 - 5.11) = 0.0093 > 0.005 \longrightarrow \therefore \phi = 0.9$$

$$\phi M_n^+ = 0.9\left[(4.43)(40)\left(21 - \frac{4.34}{2}\right)\right] \div 12 = \underline{\underline{+250.3 \text{ k}\cdot\text{ft}}}$$

- NEGATIVE BENDING (@ CONTINUOUS SPAN)

$$\phi M_n^- = \underline{\underline{-250.3 \text{ k}\cdot\text{ft}}} \quad \{\text{OPPOSITE OF POSITIVE BENDING}\}$$

TORSION:

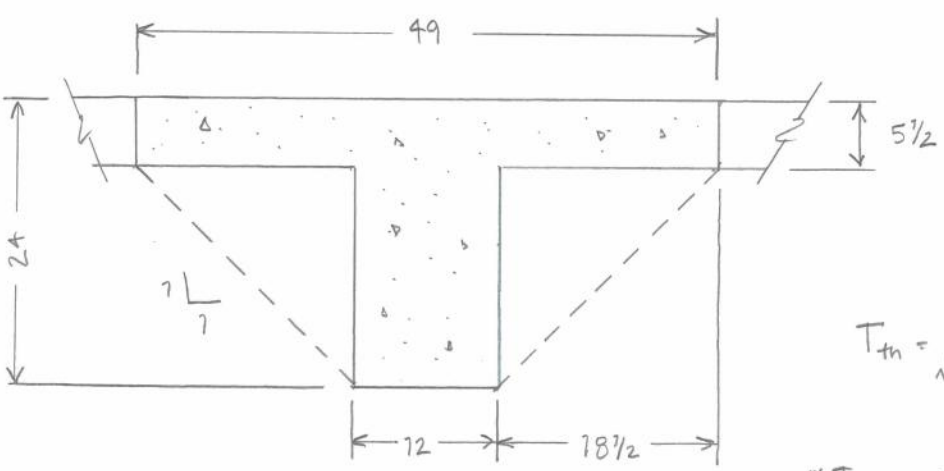

$$A_{cp} = (5\tfrac{1}{2})(49) + (12)(18\tfrac{1}{2})$$
$$= 492 \text{ in}^2$$

$$P_{cp} = 146 \text{ in}$$

$$T_{th} = \sqrt{4000}\,\frac{(492)^2}{146} \div 12000 = 8.74 \text{ k}\cdot\text{ft}$$

$$\phi T_{th} = 0.75(8.74) = \underline{\underline{6.55 \text{ k}\cdot\text{ft}}}$$

SHEAR:

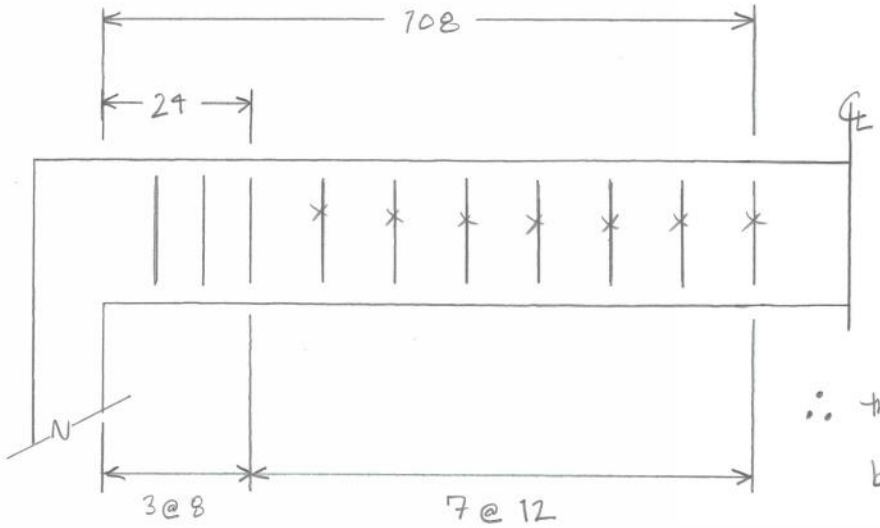

$d = 21''$

$S_{max} = d/2 = 10\frac{1}{2}''$

∴ the 7@12 stirrups shall be neglected b/c S exceeds $10\frac{1}{2}''$

$$V_c = 2\sqrt{4000}\,(12)(21) \div 1000 = 31.9\ k$$

$$V_{s_8} = \frac{2(0.11)(40)\,21}{8} = 23.1^k$$

$$\phi V_n\,(0-24) = 0.75\,(31.9 + 23.1) = \underline{\underline{41.3\ k}}$$

$$\phi V_n\,(24-MID) = 0.75\,(\tfrac{1}{2} \times 31.9) = \underline{\underline{12.0\ k}}$$

BEAM G3

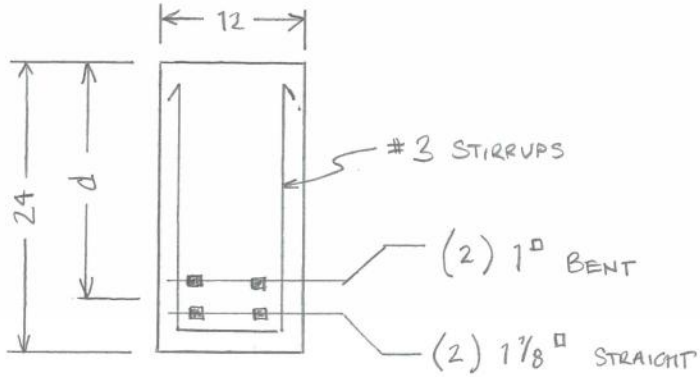

$d = 21''$

FLEXURE:

- POSITIVE BENDING

$$\phi M_n^+ = \underline{\underline{+250.3 \text{ k-ft}}} \{\text{SAME AS G2}\}$$

- NEGATIVE BENDING (@ CONTINUOUS SPAN)

$$\phi M_n^- = \underline{\underline{-250.3 \text{ k-ft}}} \{\text{SAME AS G2}\}$$

- NEGATIVE BENDING (@ END SPAN)

$$A_s = 2 \text{ IN}^2 \longrightarrow \rho_{prov} = \frac{2}{12(22)} = 0.0076 > \rho_{min} = 0.005$$

$$a = \frac{2(40)}{0.85(4)12} = 1.96 \text{ IN}^2 \longrightarrow c = \frac{1.96}{0.85} = 2.31''$$

$$\epsilon_s = \frac{0.003}{2.31}(22 - 2.31) = 0.0256 > 0.005 \longrightarrow \therefore \phi = 0.9$$

$$\phi M_n^- = 0.9\left[(2)(40)\left(22 - \frac{1.96}{2}\right)\right] \div 12 = \underline{\underline{-126.1 \text{ k-ft}}}$$

TORSION:

$$\phi T_{th} = \underline{\underline{6.55 \text{ k-ft}}} \{\text{SAME AS G2}\}$$

Project CARTER BARRON AMPHITHEATER
Subject STRENGTH CALCS – BEAMS
Job No. 13-1429-010
Sheet No. 7 of 27
Computed By NLL Date 11/4/16 Checked By _____ Date _____

SHEAR:

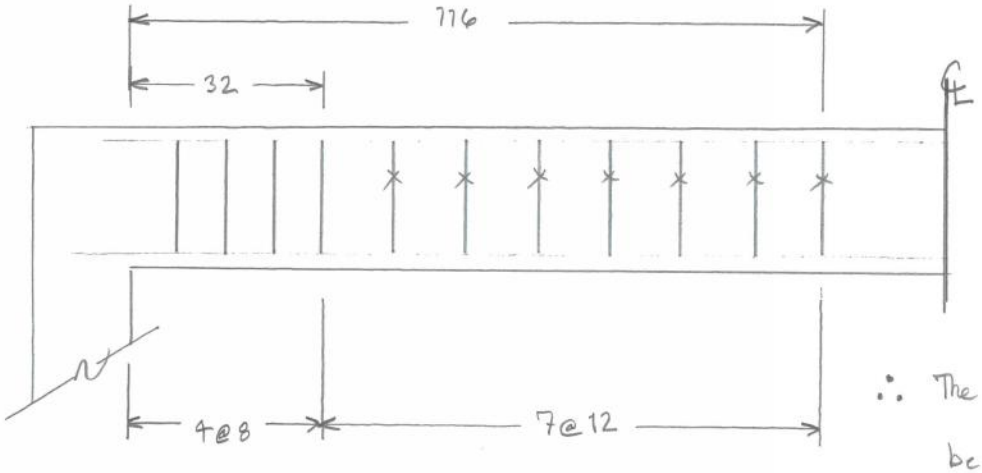

$d = 21$

$S_{max} = \frac{d}{2} = 10\frac{1}{2}''$

∴ The 7@12 Stirrups cannot be used for strength b/c $S > S_{max}$

$\phi V_n\ (0-32) = \underline{\underline{41.3^k}}$

$\phi V_n\ (32-MID) = \underline{\underline{12.0^k}}$

SAME AS G2

BEAM G7, G8, G9 & G10

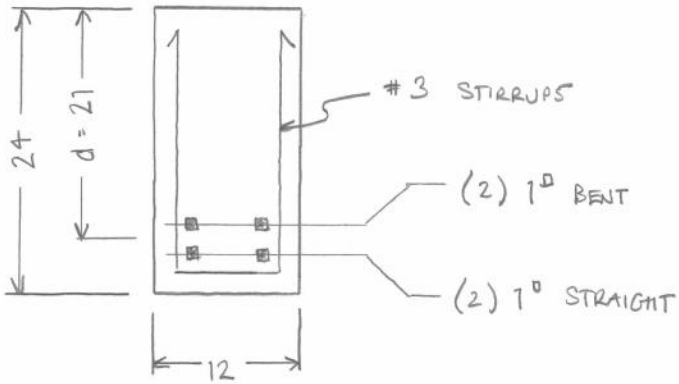

TORSION:

$\phi T_{th} = \underline{\underline{6.55\ k\cdot ft}}$ {SAME A G2}

* NOTE, G10 IS A SPANDREL

∴ $\phi T_{th} = \underline{\underline{5.52\ k\cdot ft}}$

{SEE B2 & B21}

FLEXURE:

- POSITIVE BENDING

$$A_s = 4\ \text{IN}^2 \longrightarrow \rho_{prov} = \frac{4}{(12)(21)} = 0.0159 > \rho_{min} = 0.005$$

$$a = \frac{40(4)}{0.85(12)(4)} = 3.92'' \longrightarrow c = \frac{3.92}{0.85} = 4.62''$$

$$\epsilon_s = \frac{0.003}{4.62}(21 - 4.62) = 0.0106 > 0.005 \rightarrow \therefore\ \phi = 0.9$$

$$\phi M_n^{+} = 0.9\left[(4)(40)\left(21 - \frac{3.92}{2}\right)\right] \div 12 = \underline{\underline{+228.5\ \text{k-ft}}}$$

- NEGATIVE BENDING (@ CONTINUOUS SPAN)

$$\phi M_n^{-} = \underline{\underline{-228.5\ \text{k-ft}}}$$ {OPPOSITE OF POSITIVE BENDING}

- NEGATIVE BENDING (@ END SPAN)

$$\phi M_n^{-} = \underline{\underline{-126.1\ \text{k-ft}}}$$ {SAME AS G3}

SHEAR: {SAME AS G3}

BEAM B1

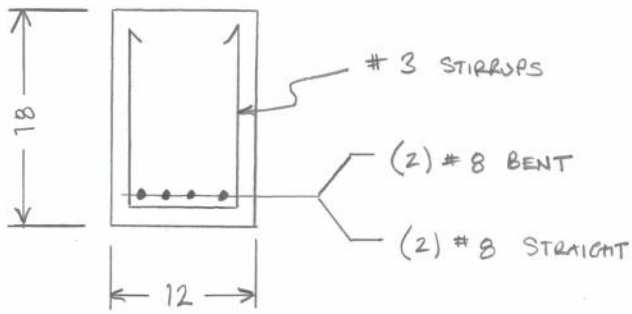

$d = 18 - 1\tfrac{1}{2} - \tfrac{1}{2} = 16''$

FLEXURE

- POSITIVE BENDING:

$$A_s = 4(0.79) = 3.16 \rightarrow \rho_p = \frac{3.16}{12(16)} = 0.0165 > \rho_{min} = 0.005$$

$$a = \frac{3.16(40)}{0.85(4)\,12} = 3.10 \longrightarrow c = \frac{3.10}{0.85} = 3.65$$

$$\epsilon_s = \frac{0.003}{3.65}(16 - 3.65) = 0.0102 > 0.005 \longrightarrow \phi = 0.9$$

$$\phi M_n^+ = 0.9\left[(40)(3.16)\left(16 - \frac{3.10}{2}\right)\right] \div 12 = \underline{\underline{{}^{+}137.0 \text{ k-ft}}}$$

- NEGATIVE BENDING (@ CONTINUOUS SPAN):

$$A_s = 2(0.79) + 2(0.6) = 2.78 \text{ IN}^2 \longrightarrow \rho_{prov} = \frac{2.78}{(12)(16)} = 0.0145$$

$$a = \frac{2.78(40)}{0.85(4)\,12} = 2.73'' \longrightarrow c = \frac{2.73}{0.85} = 3.21''$$

$$\epsilon_s = \frac{0.003}{3.21}\left(16 - 3.21\right) = 0.0120 > 0.005 \rightarrow \therefore \phi = 0.9$$

$$\phi M_n^- = 0.9\left[(2.78)(40)\left(16 - \frac{2.73}{2}\right)\right] \div 12 = \underline{\underline{-722.1 \text{ k-ft}}}$$

- NEGATIVE BENDING (@ END SPAN):

$$A_s = 2(0.79) = 1.58 \text{ in}^2 \rightarrow \rho_p = \frac{1.58}{12(16)} = 0.0082 > \rho_{min} = 0.005$$

$$a = \frac{1.58(40)}{0.85(4)12} = 1.55'' \rightarrow c = \frac{1.55}{0.85} = 1.82''$$

$$\epsilon_s = \frac{0.003}{1.82}\left(16 - 1.82\right) = 0.0234 > 0.005 \rightarrow \phi = 0.9$$

$$\phi M_n^- = 0.9\left[(1.58)(40)\left(16 - \frac{1.55}{2}\right)\right] \div 12 = \underline{\underline{-72.2 \text{ k-ft}}}$$

→ TORSION (@ SPANDREL ONLY)

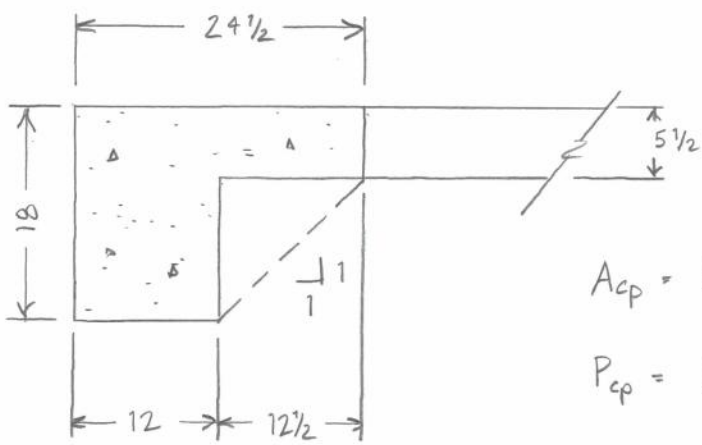

$$A_{cp} = 5\tfrac{1}{2}\left(24\tfrac{1}{2}\right) + 12\left(12\tfrac{1}{2}\right) \approx 285 \text{ in}^2$$

$$P_{cp} = 85 \text{ in}$$

$$\phi T_{th} = 0.75\left[\sqrt{4000}\,\frac{(285)^2}{85}\right] \div 12000 = \underline{\underline{3.78 \text{ k-ft}}}$$

SHEAR:

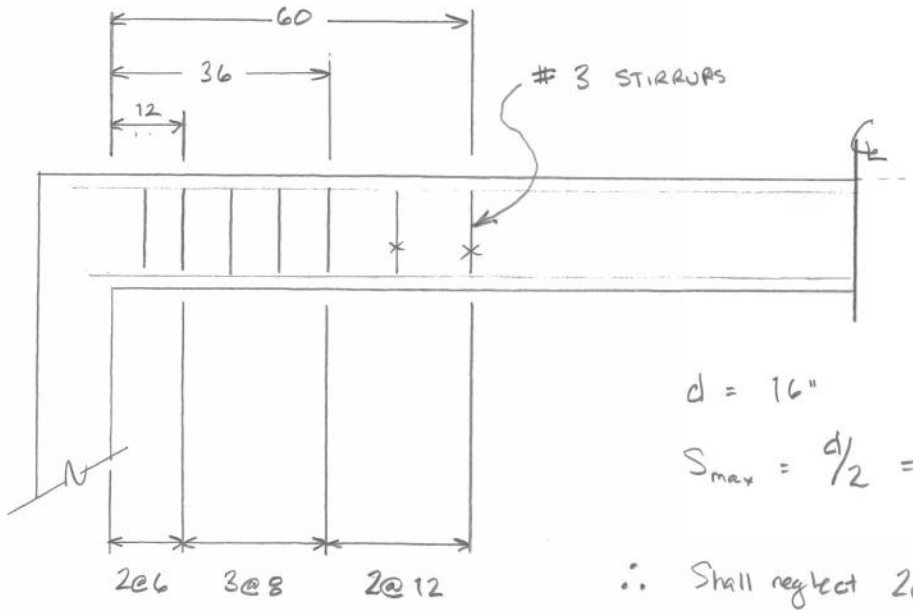

$d = 16''$

$S_{max} = d/2 = 8''$

∴ Shall neglect 2@12 STIRRUPS SINCE $S > S_{max}$

$$V_c = 2\sqrt{4000}\,(12)(16) = 24{,}286 \text{ LB}$$

$$V_{s_6} = \frac{(2 \times 0.11)(40)\,16}{6} = 23.5^k$$

$$V_{s_8} = \frac{(2 \times 0.11)(40)\,16}{8} = 17.6^k$$

$$\phi V_n\,(0-12) = 0.75\left[\overset{24.3^k}{\cancel{\frac{24286}{1000}}} + 23.5\right] = \underline{35.8^k}$$

$$\phi V_n\,(12-36) = 0.75\,(24.3 + 17.6) = \underline{31.4^k}$$

$$\phi V_n\,(36 \text{ thru MID}) = \tfrac{1}{2}(0.75)(24.3) = \underline{9.11^k}$$

BEAM B2 & B21

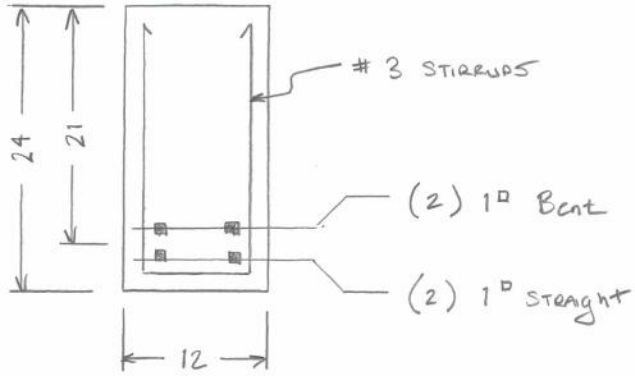

→ FLEXURE

- POSITIVE BENDING

$\phi M_n^+ = {}^+228.5$ k·ft

{SAME AS G7}

- NEGATIVE BENDING (@ CONT. SPAN)

$\phi M_n^- = -228.5$ k·ft

{SAME AS G7}

- NEGATIVE BENDING (@ END SPAN)

$\phi M_n^- = -126.1$ k-ft {SAME AS G3}

→ TORSION (@ SPANDREL CONDITION)

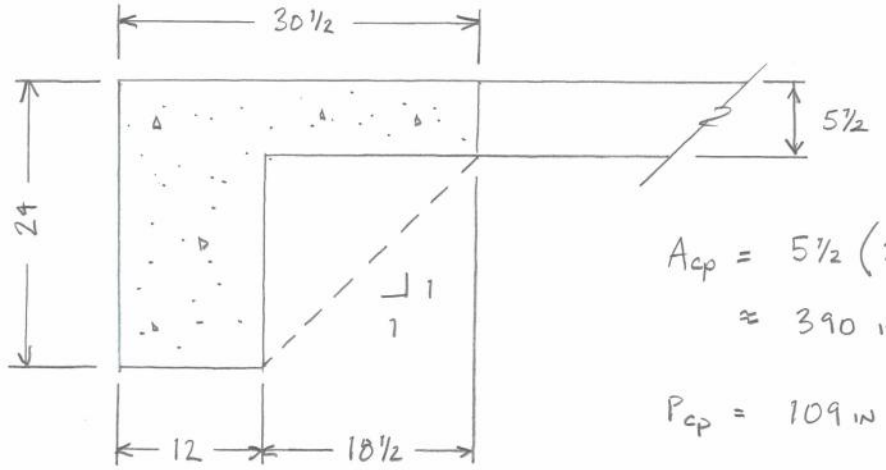

$A_{cp} = 5\tfrac{1}{2}(30\tfrac{1}{2}) + 12(18\tfrac{1}{2})$

$\approx 390 \text{ in}^2$

$P_{cp} = 109$ in

$\phi T_{th} = 0.75\left[\sqrt{4000}\,\dfrac{(390)^2}{109}\right] \div 12000 = 5.52$ k·ft

* NOTE, @ B21

$\phi T_{th} = 6.55$ k·ft {SEE G2}

SHEAR:

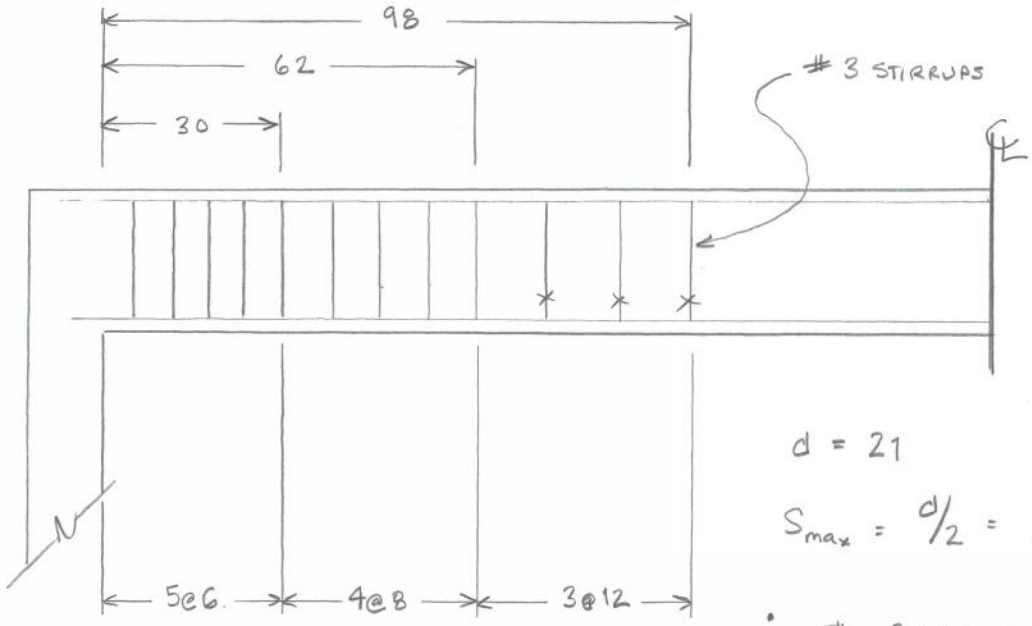

$d = 21$

$S_{max} = d/2 = 10\frac{1}{2}''$

∴ The 3@12 stirrups will be exempt from calcs b/c $S > S_{max}$

$$V_c = \frac{2\sqrt{4000}\,(12)(21)}{1000} = 31.9^k$$

$$V_{s_6} = \frac{2(0.11)(40)\,21}{6} = 30.8^k$$

$$V_{s_8} = \frac{2(0.11)(40)\,21}{8} = 23.1^k$$

$$\phi V_n\ (0 \text{ thru } 30) = 0.75(31.9 + 30.8) = \underline{47.0^k}$$

$$\phi V_n\ (30 \text{ thru } 62) = 0.75(31.9 + 23.1) = \underline{41.3^k}$$

$$\phi V_n\ (62 \text{ thru Mid}) = \tfrac{1}{2}(0.75)(31.9) = \underline{12.0^k}$$

BEAM B3 & B4

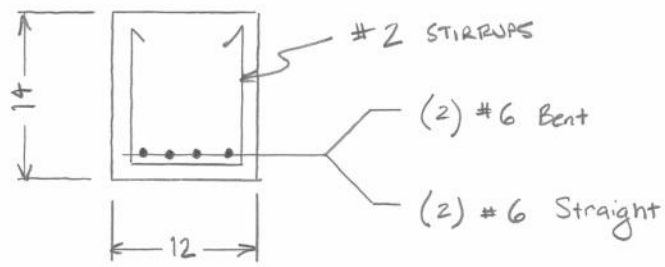

$d = 14 - 1\tfrac{1}{2} - \tfrac{1}{2} = 12''$

→ FLEXURE:

- POSITIVE BENDING

$$A_s = 4(0.44) = 1.76 \text{ in}^2 \rightarrow \rho_{prov} = \frac{1.76}{(12)(12)} = 0.0122 > \rho_{min} = 0.005$$

$$a = \frac{1.76\,(40)}{0.85(4)\,12} = 1.73'' \longrightarrow c = \frac{1.73}{0.85} = 2.03''$$

$$\epsilon_s = \frac{0.003}{2.03}\left(12 - 2.03\right) = 0.0147 > 0.005 \longrightarrow \therefore\ \phi = 0.9$$

$$\phi M_n^{+} = 0.9\left[(1.76)(40)\left(12 - \frac{1.73}{2}\right)\right] \div 12 = {}^{+}\ \underline{\underline{58.8 \text{ k}\cdot\text{ft}}}$$

- NEGATIVE BENDING (@ CONTINUOUS SPAN)

$$\phi M_n^{-} = -\ \underline{\underline{58.8 \text{ k}\cdot\text{ft}}}$$ {OPPOSITE OF POSITIVE BENDING}

- NEGATIVE BENDING (@ END SPAN)

$$A_s = 2(0.44) = 0.88 \text{ in}^2 \rightarrow A_{s_{prov}} = \frac{0.88}{144} = 0.0061 > \rho_{min} = 0.005$$

$$a = \frac{0.88(40)}{0.85(4)\,12} = 0.86'' \rightarrow c = \frac{0.86}{0.85} = 1.02''$$

$$\epsilon_s = \frac{0.003}{1.02}(12 - 1.02) = 0.0323 > 0.005 \rightarrow \therefore \phi = 0.9$$

$$\phi M_n^- = -0.9\left[(0.88)(40)\left(12 - \frac{0.86}{2}\right)\right] \div 12 = \underline{\underline{-30.5 \text{ k}\cdot\text{ft}}}$$

→ SHEAR:

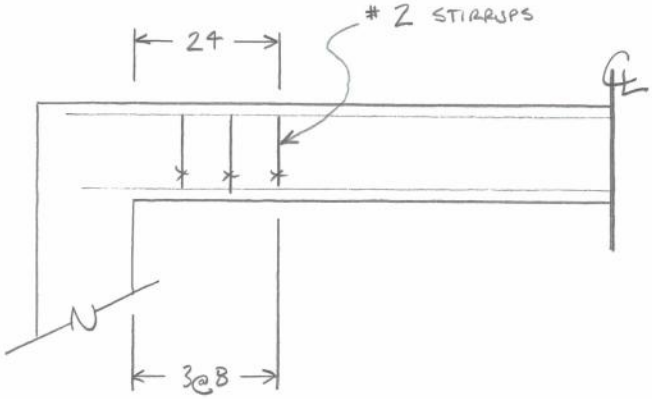

$d = 12''$

$S_{max} = d/2 = 6''$

$\therefore$ The 3@8 stirrups will be neglected for strength b/c $S > S_{max}$

The 1/2 - FACTOR CAN be exempt for concrete shear strength w/o web reinforcement if the following:

$$h \le \begin{cases} 2\tfrac{1}{2}\, t_f = 2\tfrac{1}{2}(5\tfrac{1}{2}) = \underline{\underline{13\tfrac{3}{4}''}} \approx h = 14'' \text{ (o.k.)} \\ \tfrac{1}{2}\, b = \tfrac{1}{2}(12) = 6'' \end{cases}_{max}$$

$$V_c = \frac{2\sqrt{4000}\,(12)(12)}{1000} = 18.2^{k}$$

$$\phi V_n \text{ (0 thru Mid)} = 0.75(18.2) = \underline{\underline{13.7^{k}}}$$

BEAM B15

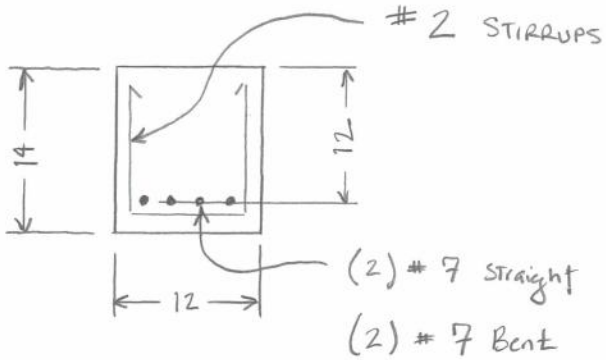

→ FLEXURE:

- POSITIVE BENDING:

$$A_s = (4)(0.6) = 2.4_{IN^2} \rightarrow \rho_p = \frac{2.4}{144} = 0.0167 > \rho_{min} = 0.005$$

$$a = \frac{2.4(40)}{0.85(4)\,12} = 2.35_{IN} \rightarrow c = \frac{2.35}{0.85} = 2.77''$$

$$\epsilon_s = \frac{0.003}{2.77}(12 - 2.77) = 0.010 > 0.005 \rightarrow \therefore \phi = 0.9$$

$$\phi M_n^{+} = 0.9\left[(2.4)(40)\left(12 - \frac{2.35}{2}\right)\right] \div 12 = \underline{\underline{{}^{+}77.9\ k\text{-}ft}}$$

- NEGATIVE BENDING (@ CONTINUOUS SPAN)

$\phi M_n^- = -\underline{77.9 \text{ k}\cdot\text{ft}}$ {OPPOSITIVE OF POSITIVE BENDING}

→ TORSION (SPANDREL CONDITION)

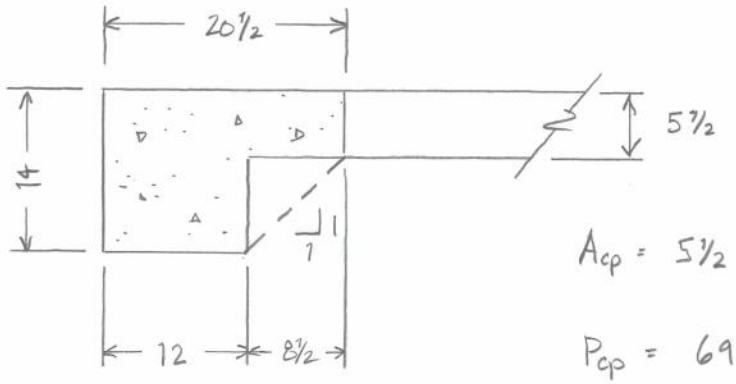

$A_{cp} = 5\tfrac{1}{2}(20\tfrac{1}{2}) + 12(8\tfrac{1}{2}) \approx 215 \text{ in}^2$

$P_{cp} = 69 \text{ in}$

$\phi T_{th} = 0.75\left[\sqrt{4000}\,\frac{(215)^2}{69}\right] \div 12000 = \underline{2.65 \text{ k-ft}}$

→ SHEAR:

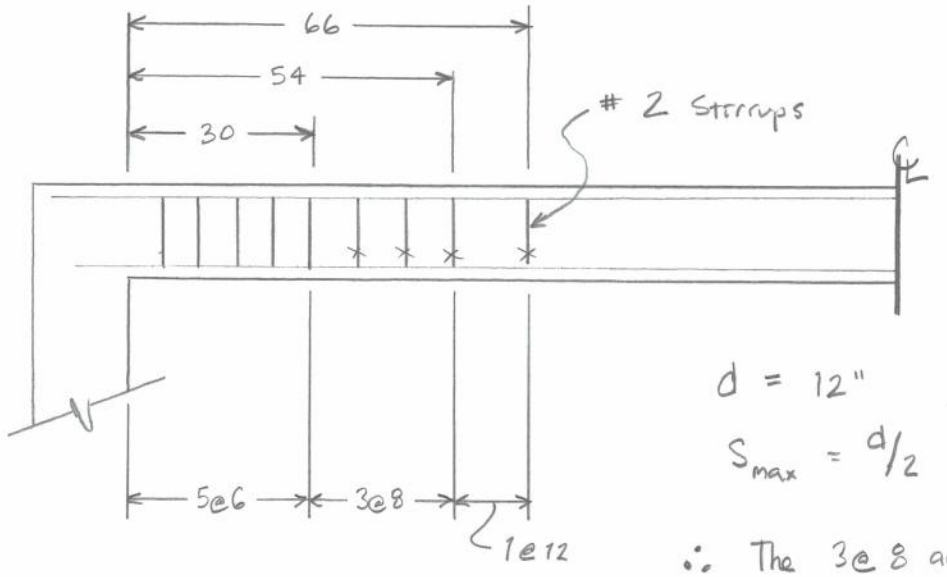

$d = 12''$

$S_{max} = d/2 = 6''$

∴ The 3@8 and 1@12 Stirrups will be neglected for strength calcs b/c $S > S_{max}$

$A_{s_{\#2}} = \frac{\pi}{4}(1/4)^2 = 0.049 \text{ in}^2$

$V_c = 18.2^k$ {SAME AS B3}

$$V_{s_6} = \frac{2(0.049)(40)\,12}{6} = 7.84^k$$

ϕV_n (0 thru 30) $= 0.75(18.2 + 7.84) = \underline{\underline{19.5^k}}$

ϕV_n (30 thru MID) $= \underline{\underline{13.7^k}}$ {SAME AS B3}

BEAM B17

TORSION (@ SPANDREL CONDITION)

$\phi T_{th} = \underline{\underline{2.65\ k\cdot ft}}$ {SAME AS B15}

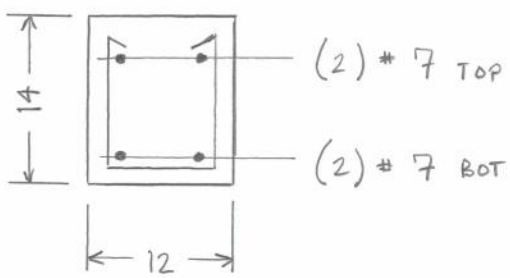

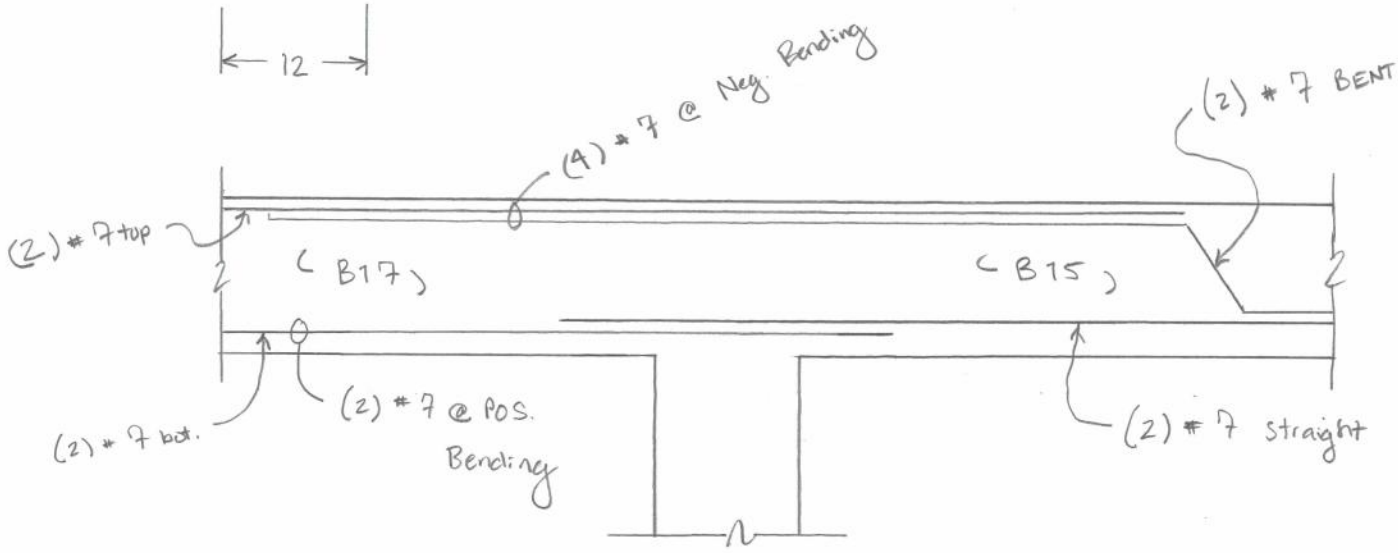

TYP. Longitudinal Reinf. Detailing

→ FLEXURE

- POSITIVE BENDING

$$A_s = 2(0.6) = 1.2 \text{ in}^2 \rightarrow \rho_{prov} = \frac{1.2}{144} = 0.0083 > \rho_{min}\ 0.005$$

$$a = \frac{1.2\ (40)}{0.85(4)12} = 1.18'' \rightarrow c = \frac{1.18}{0.85} = 1.35''$$

$$\epsilon_s = \frac{0.003}{1.35}\left(12 - 1.35\right) = 0.0237 > 0.005 \rightarrow \therefore \phi = 0.9$$

$$\phi M_n^+ = 0.9\left[(1.2)(40)\left(12 - \frac{1.18}{2}\right)\right] \div 12 = \underline{\underline{+41.1 \text{ k-ft}}}$$

- NEGATIVE BENDING (@ CONTINUOUS SPAN)

$$\phi M_n^- = \underline{\underline{-77.9 \text{ k-ft}}}$$ {SAME AS B15}

→ SHEAR: {SAME AS B3}

BEAM B27

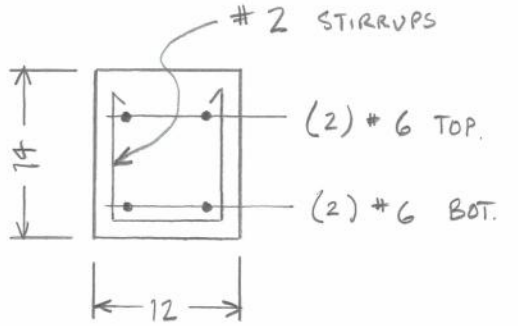

→ TORSION (SPANREL CONDITION)

$$\phi T_{th} = \underline{\underline{2.65 \text{ k}\cdot\text{ft}}}$$ {SAME AS B15}

FLEXURE:

- POSITIVE BENDING:

$$A_s = 2(0.44) = 0.88 \text{ IN}^2 \rightarrow \rho_{prov} = \frac{0.88}{(12)(12)} = 0.0061 > \rho_{min} = 0.005$$

$$a = \frac{0.88(40)}{0.85(4)12} = 0.86" \rightarrow c = \frac{0.86}{0.85} = 1.02"$$

$$\epsilon_s = \frac{0.003}{1.02}(12 - 1.02) = 0.0323 > 0.005 \rightarrow \therefore \phi = 0.9$$

$$\phi M_n^+ = 0.9\left[(0.88)(40)\left(12 - \frac{0.86}{2}\right)\right] \div 12 = \underline{\underline{+30.5 \text{ k-ft}}}$$

- NEGATIVE BENDING (@ CONTINUOUS SPAN)

$$A_s = (2)0.6 + (2)0.44 = 2.08 \text{ IN}^2 \rightarrow \rho_{prov} = \frac{2.08}{12(12)} = 0.0144$$

$$a = \frac{2.08(40)}{0.85(4)12} = 2.04" \rightarrow c = \frac{2.04}{0.85} = 2.40"$$

$$\epsilon_s = \frac{0.003}{2.40}(12 - 2.40) = 0.0120 > 0.005 \rightarrow \phi = 0.9$$

$$\phi M_n^- = 0.9\left[(2.04)(40)\left(12 - \frac{2.04}{2}\right)\right] \div 12 = \underline{\underline{-67.2 \text{ k-ft}}}$$

- NEGATIVE BENDING (@ END SPAN)

$$\phi M_n^- = \underline{\underline{-30.5 \text{ k-ft}}}$$ {OPPOSITE OF POSITIVE BENDING}

→ SHEAR:

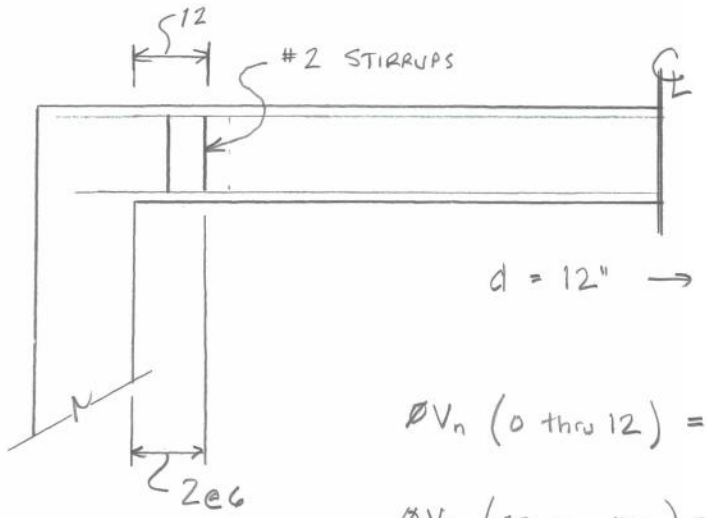

$d = 12" \rightarrow S_{max} = d/2 = 6"$

ϕV_n (0 thru 12) = $\underline{\underline{19.5^k}}$ {SAME AS B15}

ϕV_n (12 thru MID) = $\underline{\underline{13.7^k}}$ {SAME AS B3}

Project CARTER BARRON AMPHITHEATER

Subject STRENGTH CALCS - SLABS

Job No. 13-1429-010

Sheet No. 1 of 2

Computed By NLL Date 11/9/16 Checked By _____ Date _____

SLAB S6 & S15

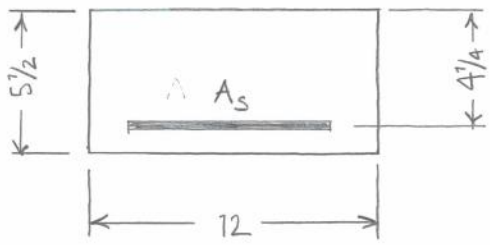

$A_s = \#4 @ 6" = 0.4 \text{ in}^2/\text{FT}$

$\rho_{prov} = \dfrac{0.4}{(12)\,5\frac{1}{2}} = 0.0061 > \rho_{min} = 0.002$

$f'_c = 4000 \text{ psi} \quad f_y = 40 \text{ ksi}$

FLEXURE:

$$a = \frac{0.4(40)}{0.85(4)\,12} = 0.39" \longrightarrow c = \frac{0.39}{0.85} = 0.46"$$

$$\epsilon_s = \frac{0.003}{0.46}\left(4.25 - 0.46\right) = 0.0247 > 0.005 \quad \therefore \phi = 0.9$$

$$\phi M_n \pm = 0.9\left[(0.4)(40)\left(4\tfrac{1}{4} - \frac{0.39}{2}\right)\right] \div 12 = \underline{\pm\ 4.87 \text{ k}\cdot\text{ft}}$$

SHEAR:

$$\phi V_n = 0.75\left[2\sqrt{4000}\,(4\tfrac{1}{4})(12)\right] \div 1000 = \underline{4.84 \text{ k}}$$

$q_u = 1.2(67) + 1.6(100) = 240.4 \text{ PSF}$

$L_n = 12'\text{-}6"$ ← Max Span Condition

$$M_u = \frac{-(240.4)(12.5)^2}{12} \div 1000 = -3.13 \text{ k}\cdot\text{ft} \quad (SR = 0.64) \checkmark$$

$$V_u = \frac{(240.4)(12\frac{1}{2})}{2} \div 1000 = 1.5^k \quad (SR = 0.31) \checkmark$$

Project CARTER BARRON AMPHITHEATER
Subject STRENGTH CALCS – SLABS
Job No. 73-1429-010
Sheet No. 2 of 2
Computed By NLL Date 11/9/16 Checked By _____ Date _____

SLAB S4, S12, S13, & S14

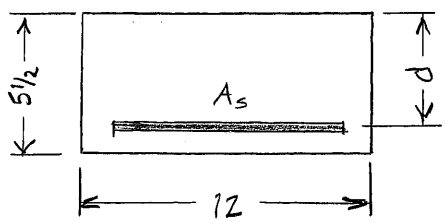

$d = 4\frac{1}{4}''$

$A_s = \#4 @ 7 = 0.343 \text{ in}^2/\text{ft}$

$$\rho_{prov} = \frac{0.343}{(12)(5\frac{1}{2})} = 0.0052 > 0.002$$

FLEXURE:

$$a = \frac{0.343(40)}{0.85(4)\,12} = 0.34'' \longrightarrow c = \frac{0.34}{0.85} = 0.40''$$

$$\epsilon_s = \frac{0.003}{0.4}\left(4\tfrac{1}{4} - 0.4\right) = 0.0289 > 0.005 \quad \therefore \phi = 0.9$$

$$\phi M_n^{\pm} = 0.9\left[(0.343)(40)\left(4\tfrac{1}{4} - \frac{0.34}{2}\right)\right] \div 12 = \underline{\pm 4.20 \text{ k-ft}}$$

SHEAR: $\phi V_n = \underline{4.84^k}$ {SAME AS S6 & S15}

$q_u = 240.4$ PSF

$L_n = 11' - 4\frac{1}{2}''$

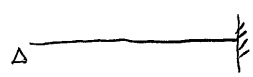

$$M_u = \frac{(240.4)(11.38)^2}{8} \div 1000 = -3.89 \text{ k-ft} \quad (SR = 0.93) \checkmark$$

$$V_u = \frac{(240.4)(11.38)\,5}{8} \div 1000 = 1.71^k \quad (SR = 0.35) \checkmark$$

Engineering A Brighter Future

LATERAL ANALYSIS & COLUMN CHECK

Project CARTER BARRON AMPHITHEATER

Subject LATERAL ANALYSIS & COLUMN CHECK

Job No. 13-1429-010

Sheet No. 7 of 14

Computed By NLL Date 11/7/16 Checked By _____ Date _____

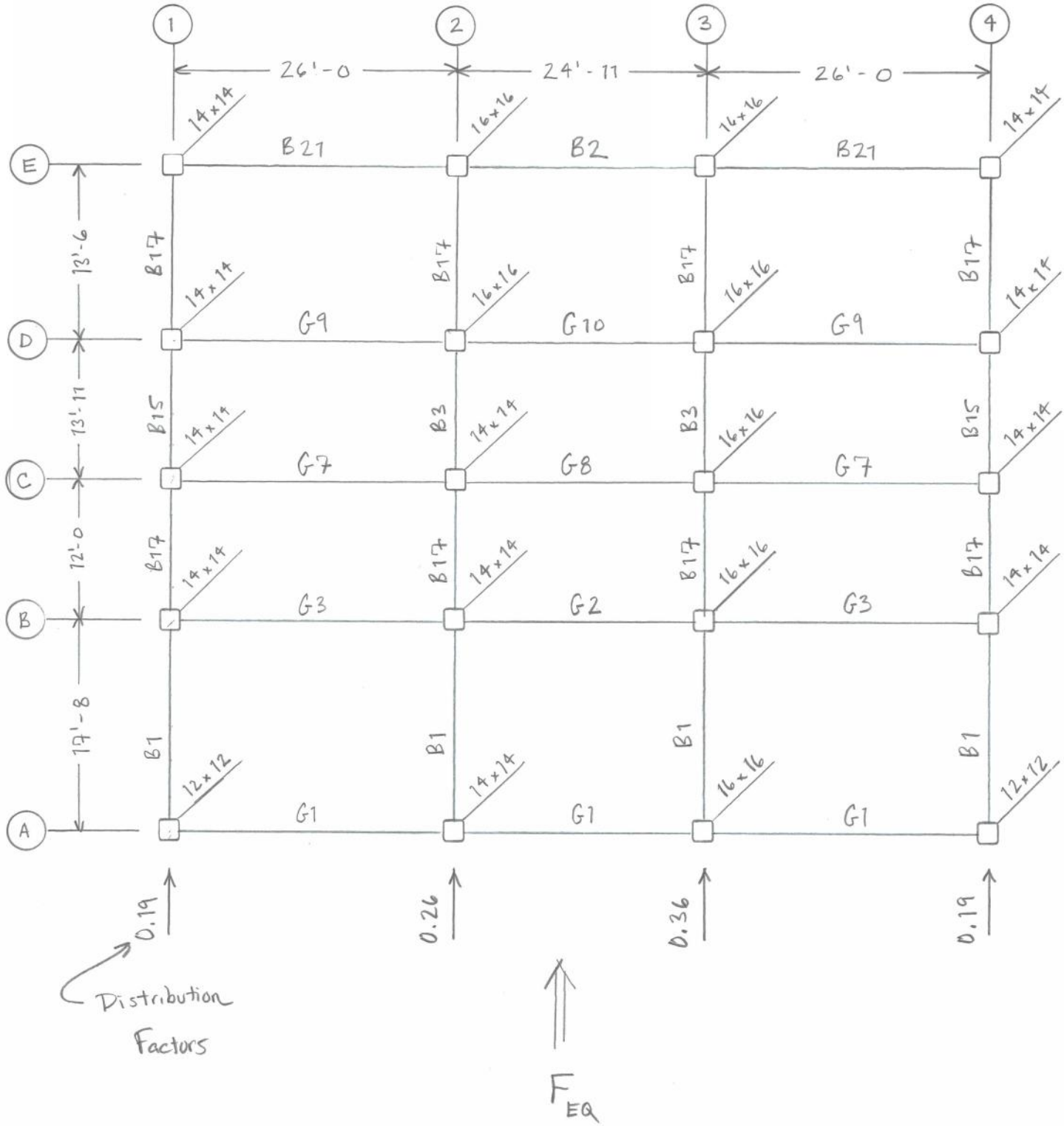

Project CARTER BARRON AMPHITHEATER

Subject LATERAL ANALYSIS & COLUMN CHECK

Job No. 13-1429-010

Sheet No. 2 of 14

Computed By NLL Date 11/7/16 Checked By _____ Date _____

FRAME 2 ANALYSIS

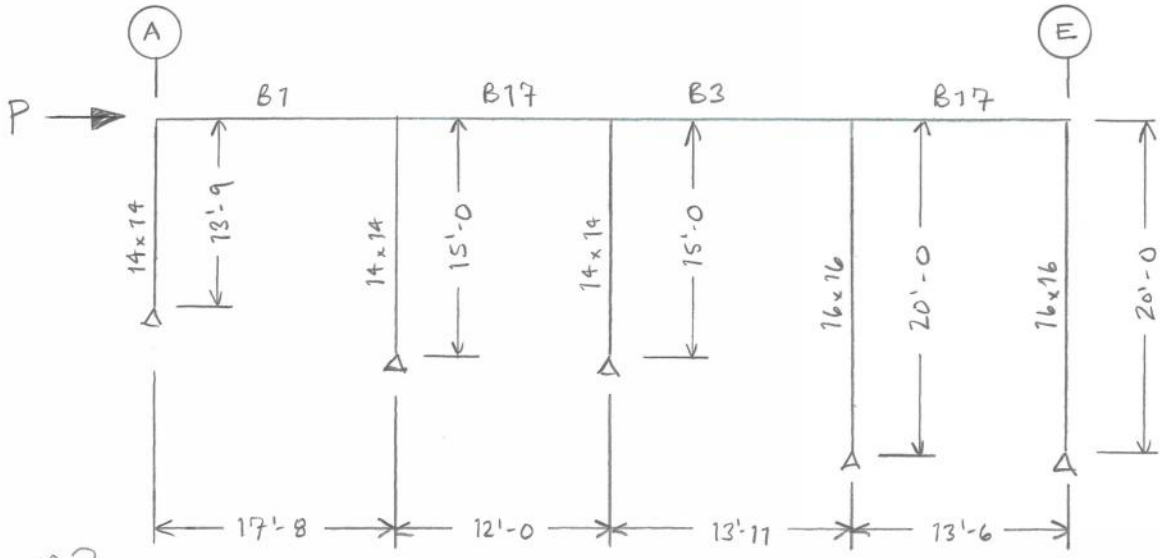

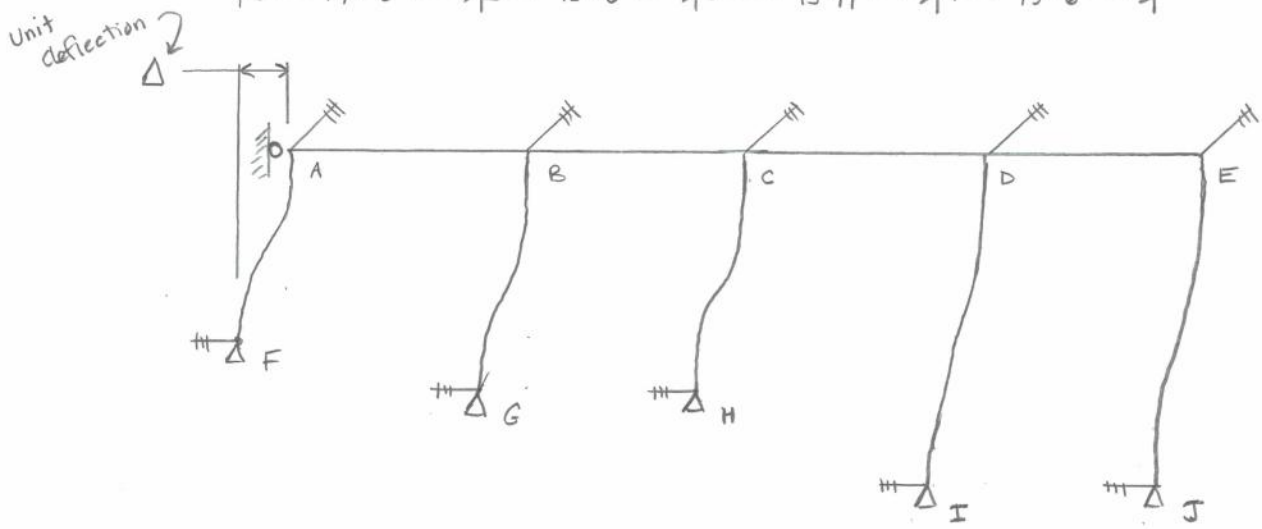

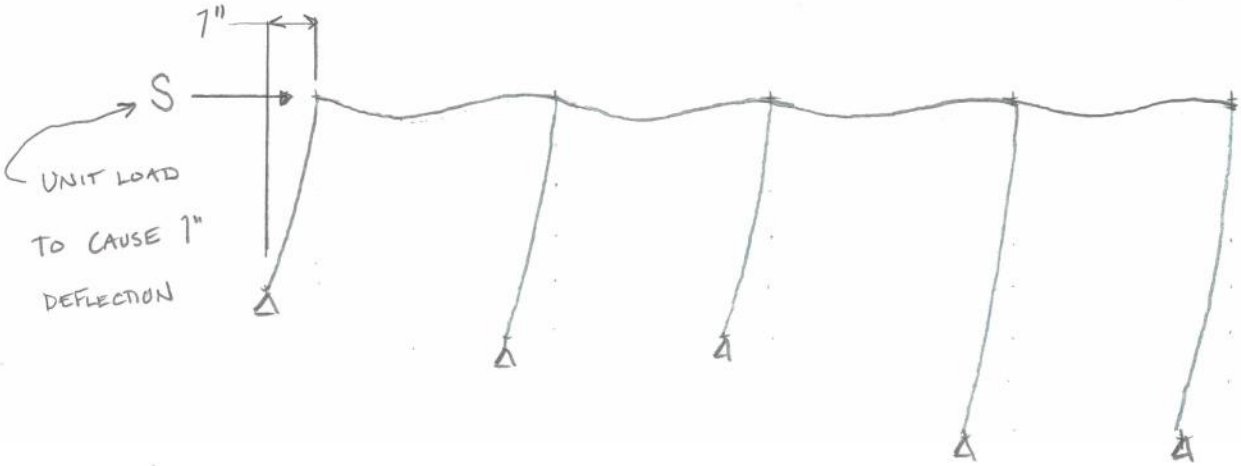

Ig Factors

$$I_{14\times14} = 0.7\left[\tfrac{1}{12}(14)^4\right] = 2241 \text{ in}^4$$

$$I_{16\times16} = 0.7\left[\tfrac{1}{12}(16)^4\right] = 3823 \text{ in}^4$$

$$I_{B1} = 0.5\left[\tfrac{1}{12}(12)(18)^3\right] = 2916 \text{ in}^4$$

$$I_{B3} = 0.41\left[\tfrac{1}{12}(12)(14)^3\right] = 1125 \text{ in}^4$$

$$I_{B17} = 0.37\left[\tfrac{1}{12}(12)(14)^3\right] = 1015 \text{ in}^4$$

JOINT DISTRIBUTION FACTORS

- @ JOINT A

$$K_{AB} = \frac{2916}{212} = 13.75 \qquad DF_{AB} = \frac{13.75}{23.94} = 0.57$$

$$K_{AF} = \tfrac{3}{4}\left(\frac{2241}{165}\right) = 10.19 \qquad DF_{AF} = 1 - 0.57 = 0.43$$

$$\Sigma K = 23.94$$

- @ JOINT B

$$K_{BA} = 13.75 \qquad DF_{BA} = \frac{13.75}{30.14} = 0.46$$

$$K_{BC} = \frac{1015}{144} = 7.05 \qquad DF_{BC} = \frac{7.05}{30.14} = 0.24$$

$$K_{BG} = \tfrac{3}{4}\left(\frac{2241}{180}\right) = 9.34 \qquad DF_{BG} = 1 - 0.46 - 0.24 = 0.30$$

$$\Sigma K = 30.14$$

- @ JOINT C

$K_{CB} = 7.05$

$K_{CD} = \frac{1125}{167} = 6.74$

$K_{CH} = 9.34$

$\Sigma K = 23.13$

$DF_{CB} = \frac{7.05}{23.13} = 0.31$

$DF_{CD} = \frac{6.74}{23.13} = 0.29$

$DF_{CH} = 1 - 0.31 - 0.29 = 0.40$

- @ JOINT D

$K_{DC} = 6.74$

$K_{DE} = \frac{1015}{162} = 6.27$

$K_{DI} = \frac{3}{4}\left(\frac{3823}{240}\right) = 11.95$

$\Sigma K = 24.96$

$DF_{DC} = \frac{6.74}{24.96} = 0.27$

$DF_{DE} = \frac{6.27}{24.96} = 0.25$

$DF_{DI} = 1 - 0.27 - 0.25 = 0.48$

- @ JOINT E

$K_{ED} = 6.27$

$K_{EJ} = 11.95$

$\Sigma K = 18.22$

$DF_{ED} = \frac{6.27}{18.22} = 0.35$

$DF_{EJ} = 1 - 0.35 = 0.65$

$E_{CONC} = 57000\sqrt{4000} \div 1000 = 3605$ ksi

FIXED-END MOMENTS

- $FEM_{AF} = -\dfrac{6EI}{L^2} = -\dfrac{6(3605\ ksi)(2241\ in^4)}{(165\ in)^2} \div 12 = -148.4\ k\cdot ft$

- $FEM_{BG} = FEM_{CH} = \dfrac{-6(3605)(2241)}{(180)^2} \div 12 = -124.7\ k\cdot ft$

- $FEM_{DI} = FEM_{EJ} = \dfrac{-6(3605)(3823)}{(240)^2} \div 12 = -119.6\ k\cdot ft$

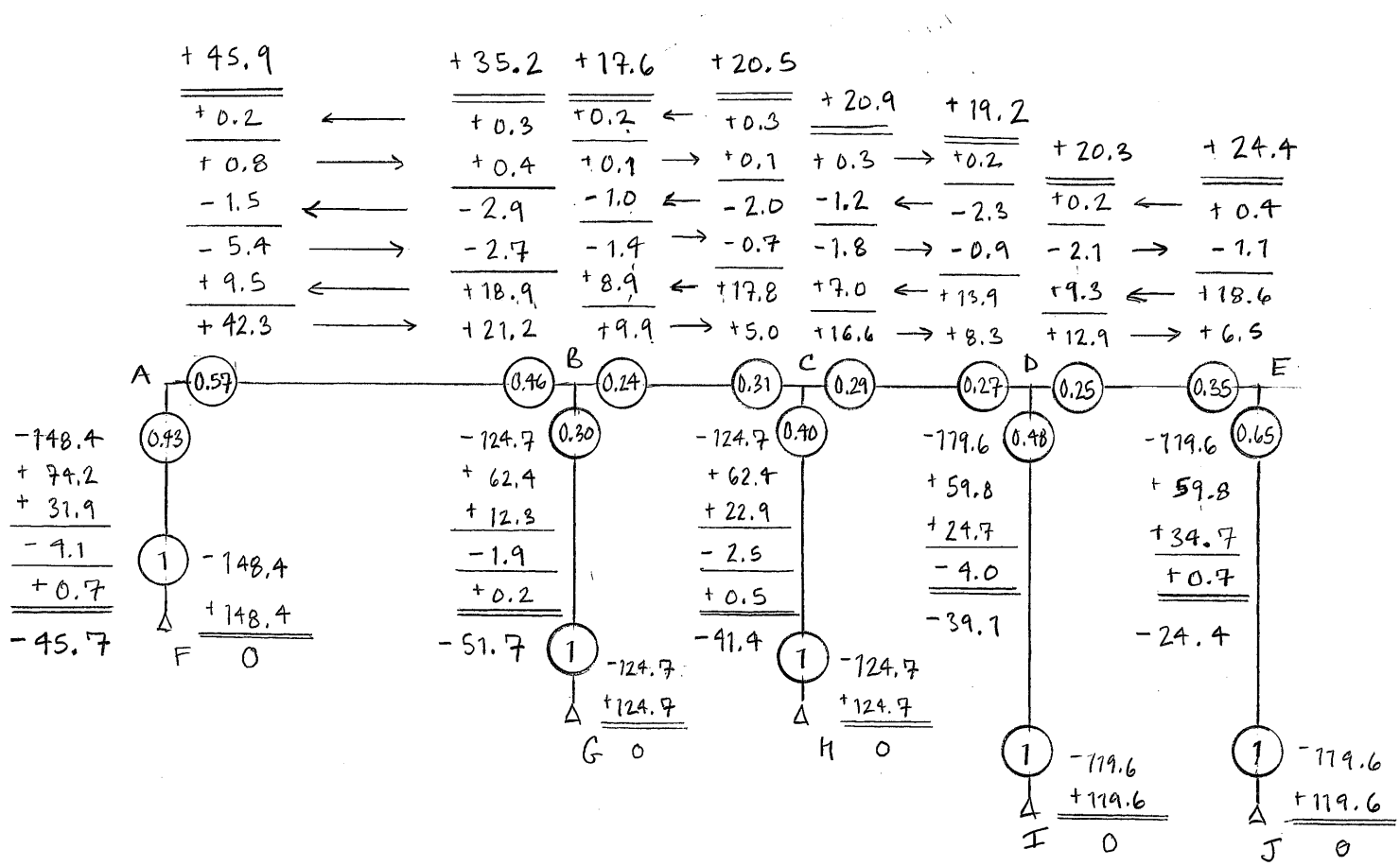

Project CARTER BARRON AMPHITHEATER
Subject LATERAL ANALYSIS & COLUMN CHECK
Job No. 13-1429-010
Sheet No. 6 of 14
Computed By NLL Date 11/7/16 Checked By _____ Date _____

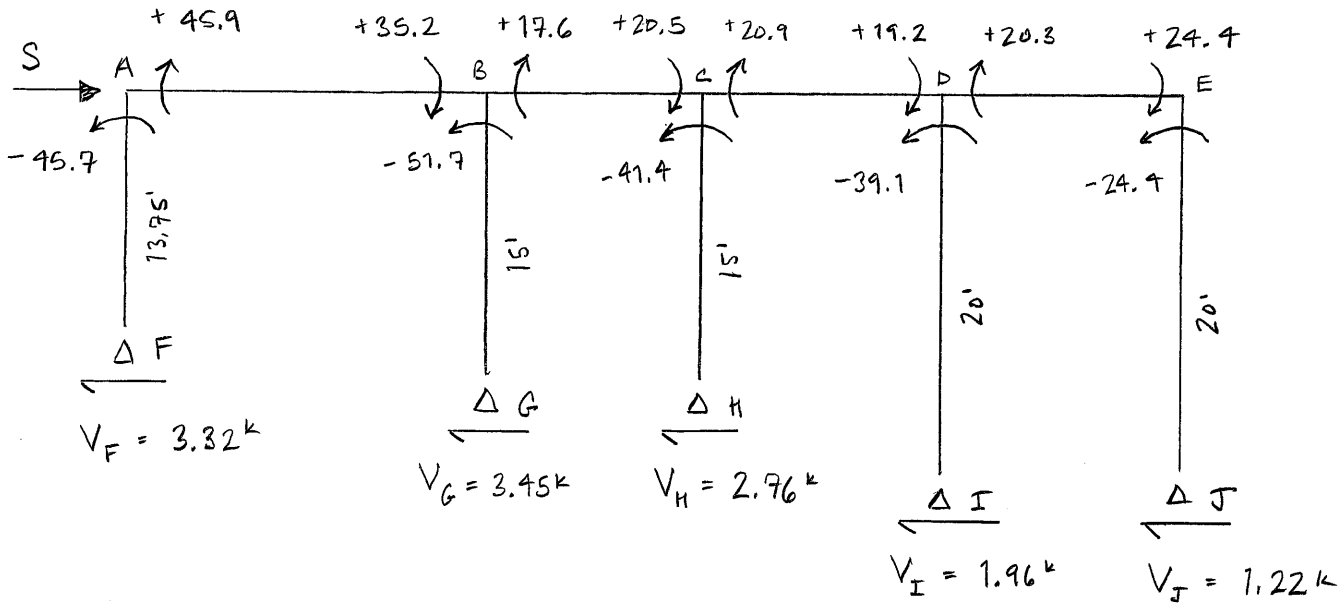

$\therefore\ S = \Sigma V = \underline{\underline{12.71\ k}}$ ← Force to deflect the structure 1 INCH LATERALLY

→ $\boxed{\text{TO DETERMINE FRAME SEISMIC FORCE}}$

$$I_{12\times12} = 0.7\left[\tfrac{1}{12}(12)^4\right] = 1210\ in^4$$

- FRAME 1 RELATIVE STIFFNESS:

* BEAMS ARE PRACTICALLY THE SAME FOR THE FRAMES, ∴ WILL ONLY LOOK @ COLUMNS

$$K_1 = \frac{1210}{165} + 2\left(\frac{2241}{180}\right) + 2\left(\frac{2241}{240}\right) = 50.91$$

- FRAME 2 RELATIVE STIFFNESS:

$$K_2 = \frac{2241}{165} + 2\left(\frac{2241}{180}\right) + 2\left(\frac{3823}{240}\right) = 70.34$$

- FRAME 3 RELATIVE STIFFNESS:

$$K_3 = \frac{3823}{765} + 2\left(\frac{3823}{180}\right) + 2\left(\frac{3823}{240}\right) = 97.51$$

- FRAME 4 RELATIVE STIFFNESS: $K_4 = K_1 = 50.91$

$$\Sigma K = 269.67$$

$$DF_1 = DF_4 = \frac{50.91}{269.67} = 0.19$$

$$DF_2 = \frac{70.34}{269.67} = 0.26 \qquad DF_3 = 1 - 2(0.19) - 0.26 = 0.36$$

SEISMIC FORCE

$F_2 = 0.26(21.25) = 5.53^k$ $\qquad \frac{F_2}{S} = \frac{5.53}{12.71} \approx 0.435$

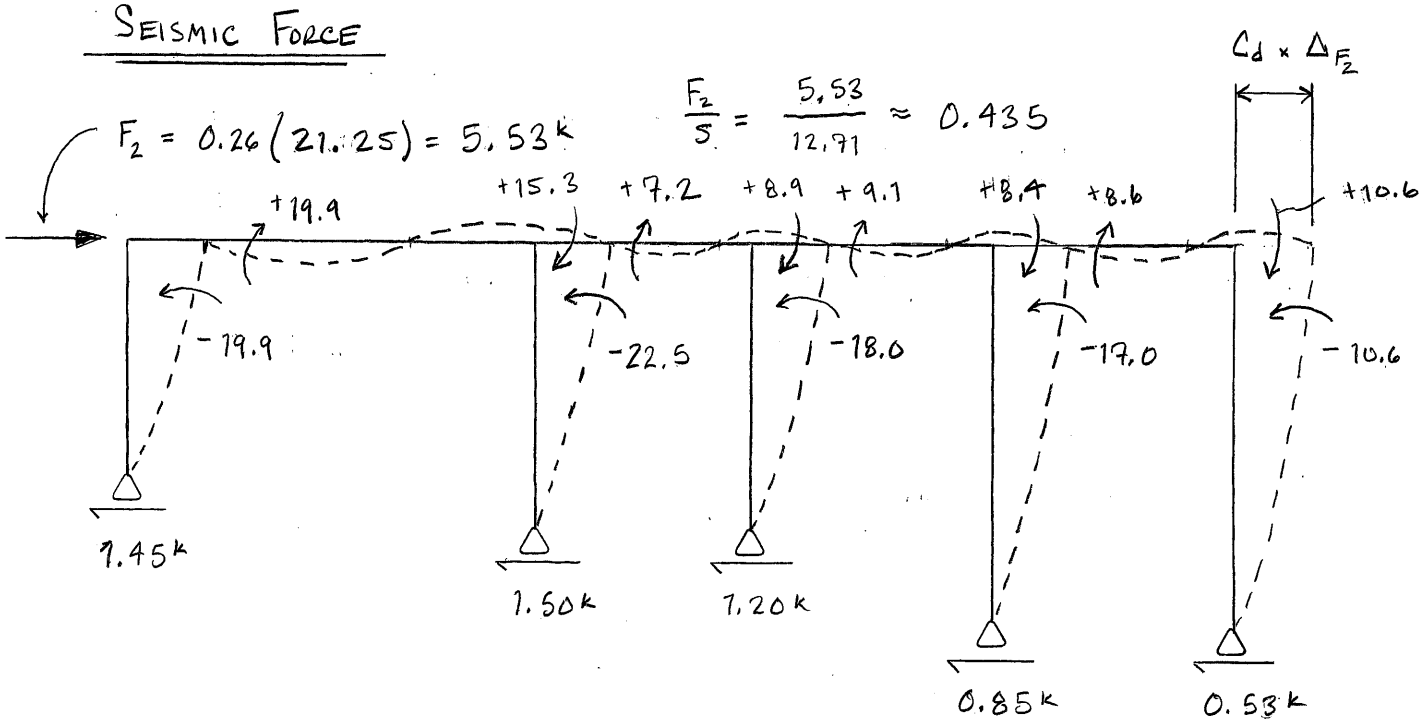

$$\Delta_{EQ} = C_d \times \Delta_{F_2} = 2\tfrac{1}{2} \times 0.435'' = 1.09''$$

$$\Delta_{LIMIT} = 0.020H = 0.020\left(\frac{165 + 240}{2}\right) = 4.05''$$

$$\Delta_{EQ} < \Delta_{LIMIT} \quad (\text{O.K.})$$

COLUMN CHECK

→ LOADS

$P_D = -65.1^k$ $P_L = -43.85$ $P_S = -8.95\ k$ $P_E = 0$

$M_{33_D} = {}^{+}11.0\ k\text{-}ft$ $M_{33_L} = {}^{+}9.8\ k\cdot ft$ $M_{33_S} = {}^{+}2.44\ k\text{-}ft$ $M_{33_E} = 0$

$M_{22_D} = +15.4\ k\text{-}ft$ $M_{22_L} = +16.8\ k\text{-}ft$ $M_{22_S} = +3.94\ k\cdot ft$ $M_{22_E} = \pm 22.5\ k\text{-}ft$

$V_{22_D} = -2.08\ k$ $V_{22_L} = -1.67\ k$ $V_{22_S} = -0.388\ k$ $V_{22_E} = 0$

$V_{33_D} = {}^{+}3.78\ k$ $V_{33_L} = {}^{+}3.34\ k$ $V_{33_S} = {}^{+}0.64\ k$ $V_{33_E} = {}^{+}1.5^k$

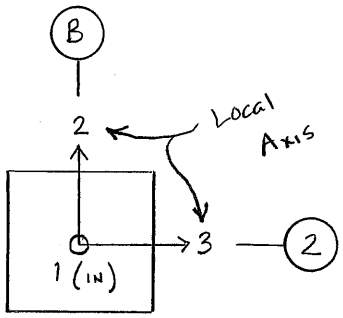

THESE CAN ACT IN ± DIRECTION

∴ WILL CONSIDER + FOR GREATEST EFFECT.

Project CARTER BARRON AMPHITHEATER
Subject LATERAL ANALYSIS & COLUMN CHECK
Job No. 13-1429-010
Sheet No. 9 of 14
Computed By NLL Date 11/8/16 Checked By _____ Date _____

LC 1 = 1.2D + 1.0L + 1.0E + 0.2S

$P_u = 1.2(-65.1) + 1.0(-43.9) + 0.2(-8.95) = -123.8\ k$

$M_{33_u} = 1.2(+11.0) + 1.0(+9.8) + 0.2(+2.44) = +23.5\ k\text{-}ft$

$M_{22_u} = 1.2(15.4) + 1.0(16.8) + 0.2(3.94) + 1.0(22.5) = +58.6\ k\text{-}ft$

$V_{22_u} = 1.2(-2.08) + 1.0(-1.67) + 0.2(-0.39) = -4.25\ k$

$V_{33_u} = 1.2(3.78) + 1.0(3.34) + 0.2(0.64) + 1.0(1.5) = 9.50\ k$

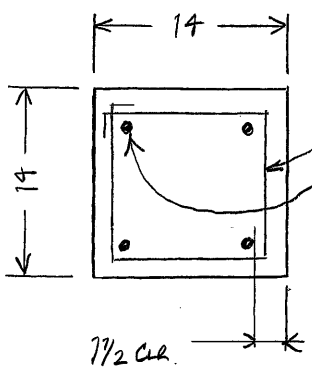

[ASSUME #2]
STIRRUPS @ 12" O.C (SIZE UNKNOWN) ← #2 MIN SIZE

(4) LONGITUDINAL BARS (SIZE UNKNOWN)
[ASSUME (4) #7]

$A_{s_{\ell,min}} = 0.01 A_g = 0.01(14)(14) = 1.96\ in^2\ (0.49\ in^2/BAR)$

max: $(4)\ \#5 = 4(0.31) = 1.24\ in^2$

#6 BAR = 0.44 in^2

#7 BAR = 0.60 in^2 ← Reasonable to assume (4) #7 VERT. FOR LONGITUDINAL STEEL [$A_s = 2.4\ in^2$]

per ACI 318-56

$S_{max} =$ $16 d_{b\ell} = 16(0.875) = 14"$

$48 d_{bv}$ → for #2 STIRRUP = $48(1/4) = 12"$ ✓

min: least dimension = 14"

* SINCE CORES were not taken @ the COLUMNS, will first analyze column with $f'_c = 2500$ psi

FLEXURE:

$$a = \frac{1.2(40)}{0.85(2.5)\,14} = 1.67'' \longrightarrow c = \frac{1.67}{0.85} = 1.90''$$

$$\epsilon_s = \frac{0.003}{1.9}(12 - 1.9) = 0.0159 > 0.005 \longrightarrow \therefore \phi = 0.9$$

$$\phi M_n = 0.9\left[(1.2)(40)\left(12 - \frac{1.67}{2}\right)\right] \div 12 = \underline{\underline{40.3 \text{ k-ft}}}$$

COMPRESSION:

$$\phi P_n = 0.80\,\phi\left[0.85 f'_c (A_g - A_s) + f_y (A_s)\right]$$

$$= 0.80(0.65)\left[0.85(2.5)(196 - 2.4) + (40)(2.4)\right]$$

$$= \underline{\underline{263.8 \text{ k}}}$$

BALANCED CONDITION; FOR 40 ksi

$\epsilon_s = 0.0014$, $\epsilon_c = 0.003$

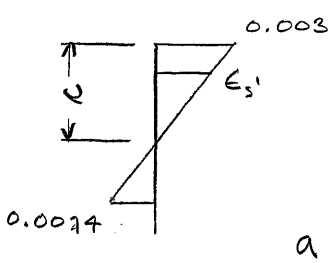

$$c = \frac{0.003}{(0.003 + 0.0014)}(12) = 8.18''$$

$$a = 0.85(8.18) = 6.95''$$

$$\epsilon'_s = \frac{(8.18 - 2)}{8.18}\,0.003 = 0.0023 > 0.0014$$

$\therefore A'_s$ is yielding

$C_{conc} = 0.85(2.5)(6.95)(14) = 206.8^k$

$C_{STL} = 1.2\left(40 - 0.85(2.5)\right) = 45.5^k$

$T_{STL} = 1.2(-40) = -48^k$

$P_n = 206.8 + 45.5 - 48 = 204.3^k$

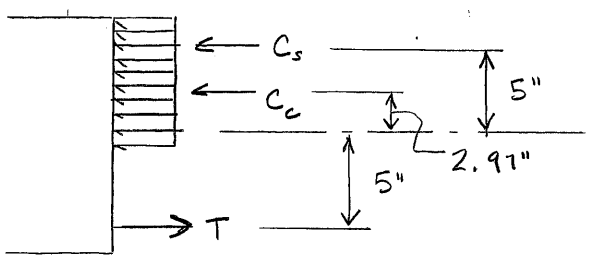

$M_n = \left[48(5) + 45.5(5) + 206.8(2.91)\right] \div 12 = 89.1$ k-ft

$\phi P_{n_b} = 0.65(204.3) = 132.8^k$

$\phi M_{n_b} = 0.65(89.1) = 57.9$ k-ft

→ TENSION-CONTROLLED LIMIT:

$\epsilon_s = 0.005$

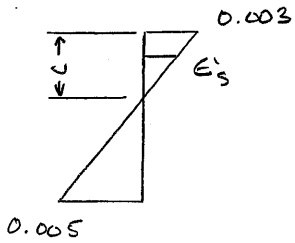

$c = \dfrac{0.003}{0.005 + 0.003}(12) = 4\tfrac{1}{2}"$

$a = 0.85c = 3.83"$

$\epsilon'_s = \dfrac{(4\tfrac{1}{2} - 2)}{4\tfrac{1}{2}} 0.003 = 0.0017 > 0.0014$

∴ A'_s IS YIELDING

Project CARTER BARRON AMPHITHEATER
Subject LATERAL ANALYSIS & COLUMN CHECK
Job No. 13-1429-010
Sheet No. 12 of 14
Computed By NLL Date 11/8/16 Checked By _____ Date _____

$C_{CONC} = 0.85(2.5)(3.83)(14) = 114.0\ k$

$C_{STL} = 45.5\ k \qquad T_{STL} = -48\ k$

$\phi P_n = 0.9(114.0 + 45.5 - 48) = 111.5\ k$

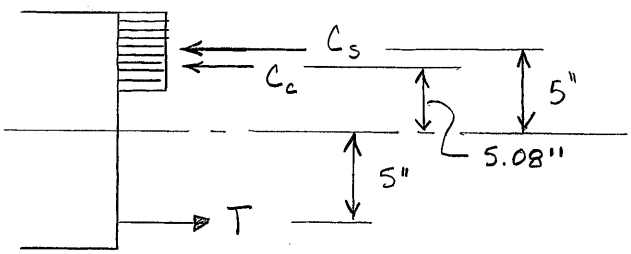

$\phi M_n = 0.9\left[48(5) + 45.5(5) + 111.5(5.08)\right] \div 12 = 77.6\ k\cdot ft$

$\rightarrow$ @ $\epsilon_s = 0$:

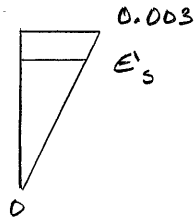

$c = d = 12" \rightarrow a = 0.85(12) = 10.2"$

$\epsilon'_s = \frac{12-2}{12}\,0.003 = 0.0025 > 0.0014$

$\therefore$ A's YIELDS

$C_c = 0.85(2.5)(14)(10.2) = 303.5\ k$

$C_s = 45.5\ k$

$\phi P_n = 0.65(303.5 + 45.5) = 226.9\ k$

$\phi M_n = 0.65\left[45.5(5) + 303.5(1.9)\right] \div 12 = 43.6\ k\cdot ft$

(14 x 14)

COLUMN B2 INTERACTION DIAGRAM

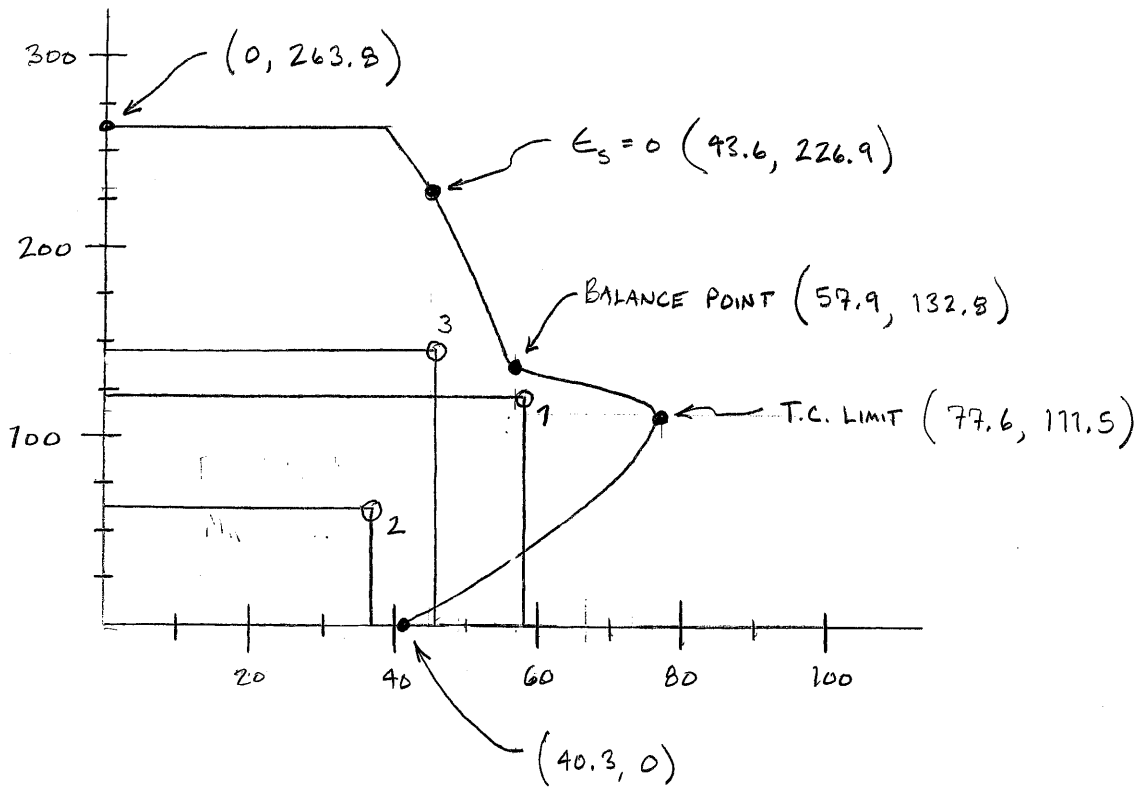

LC ① $P_u = 123.8$ k
$M_u = 58.6$ k·ft } FROM pg 9

LC ② : 0.9D + 1.0E

$P_u = 0.9(65.1\text{ k}) = 58.6$ k

$M_u = 0.9(15.4) + 1.0(22.5) = 36.4$ k·ft

LC ③ 1.2D + 1.6L

$P_u = 1.2(65.1) + 1.6(43.9) = 148.4$ k

$M_u = 1.2(15.4) + 1.6(16.8) = 45.4$ k·ft

Project CARTER BARRON AMPHITHEATER
Subject LATERAL ANALYSIS & COLUMN CHECK
Job No. 13-1429-010
Sheet No. 14 of 14
Computed By NLL Date 11/8/16 Checked By _____ Date _____

SHEAR

@ LC ① : 1.2D + 1.0L + 1.0E + 0.2S

$$V_{u_{RSLT}} = \sqrt{4.25^2 + 9.5^2} = 10.4^k$$

@ LC ③ : 1.2D + 1.6L

$$V_{22} = 1.2(2.08) + 1.6(1.67) = 5.17^k$$

$$V_{33} = 1.2(3.78) + 1.6(3.34) = 9.88^k$$

$$V_{u_{RSLT}} = \sqrt{5.17^2 + 9.88^2} = \underline{\underline{11.2^k}} \leftarrow \text{CONTROLLING}$$

$$V_c = 2\sqrt{2500}(12)(14) \div 1000 = 16.8^k$$

$$\phi V_n = 0.75(16.8) = 12.6^k > 11.2^k \text{ (O.K.)}$$

Engineering A Brighter Future

STAGE FRAMING DESIGN STATUS (100 PSF LIVE LOAD)

Project CARTER BARRON AMPHITHEATER

Subject STAGE FRAMING DESIGN STATUS (100 PSF LL)

Job No. 13-1429-010

Sheet No. 1 of 1

Computed By NLL Date 11/9/16 Checked By _____ Date _____

Beam Design Stress Ratio Summary			
Beam Designation	Limit State		
	Flexure	Shear	Torsion
G1	0.66	2.16	0.56
G2	0.65	2.23	1.52
G3	0.75	2.79	1.94
G7	0.95	1.11	0.13
G8	0.94	3.08	0.05
G9	0.85	3.15	0.45
G10	0.76	2.44	0.44
B1	0.86	2.10	negl.
B2	0.81	2.00	negl.
B3 / B4	0.71	1.33	negl.
B15	0.21	0.43	negl.
B17	0.38	0.91	0.20
B21	0.87	2.48	negl.
B27	0.06	0.09	0.92

Bentley Microsoft

Current Date: 11/9/2016 9:38 AM
Units system: English
File name: C:\Users\nleonard\Documents\JMT Projects\Carter Barron Amphitheater\Stage Frame Analysis.etz\
Load condition: D2=1.2DL+1.6LL

BEAM G1

Internal forces

Bending moment

ϕM_n @ END = -102.1 k·ft > $M_u = -47.28$ k·ft (SR = 0.46) ✓

ϕM_n @ CONT = -180.5 k·ft > $M_u = -119.41$ k·ft (SR = 0.66) ✓

ϕM_n @ MID = $+180.5$ k-ft > $M_u = +105.85$ k·ft (SR = 0.59) ✓

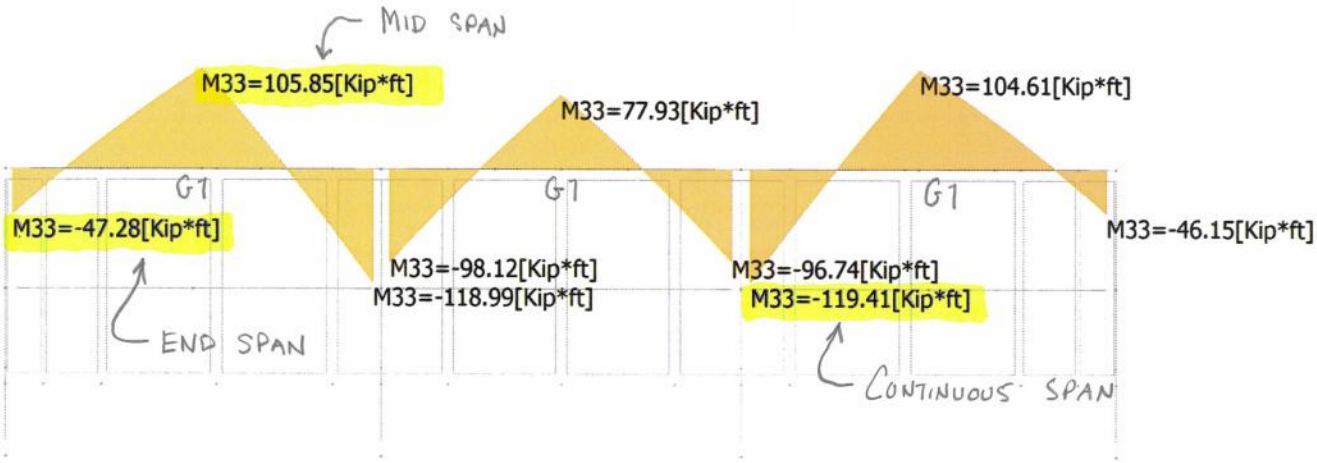

Bentley Microsoft

Current Date: 11/9/2016 9:39 AM
Units system: English
File name: C:\Users\nleonard\Documents\JMT Projects\Carter Barron Amphitheater\Stage Frame Analysis.etz\
Load condition: D2=1.2DL+1.6LL

BEAM G1

Internal forces

Shear force

$\phi V_n = 9.68^k < V_u = 20.9^k \; (SR = 2.16)$ ✗

$\phi V_n = 9.68^k < 1.4(8.81) = 12.33^k$

therefore, the member cannot hold up only the dead load

$\left\{ \begin{array}{l} V_D = 8.81^k \\ V_L = 6.46^k \end{array} \right.$

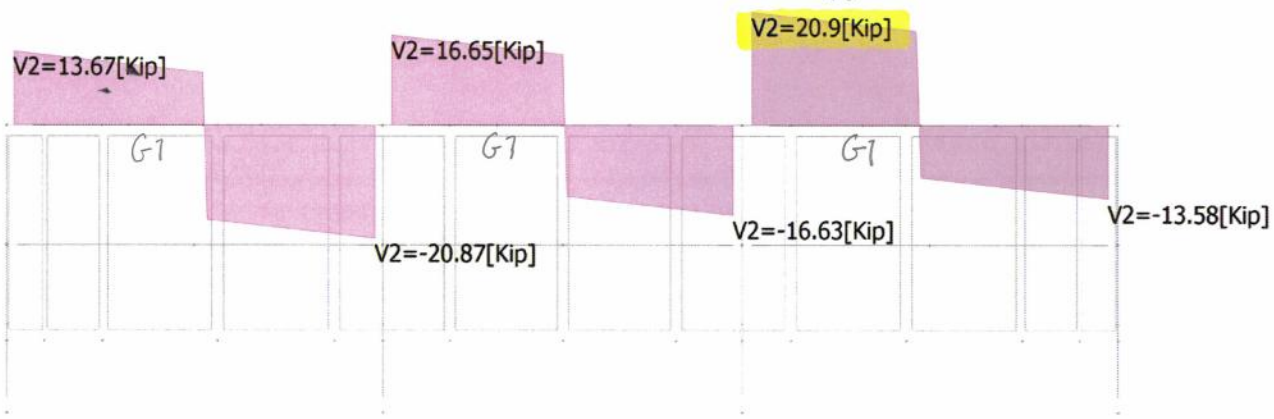

Bentley Microsoft

BEAM G1

Current Date: 11/9/2016 9:39 AM
Units system: English
File name: C:\Users\nleonard\Documents\JMT Projects\Carter Barron Amphitheater\Stage Frame Analysis.etz\
Load condition: D2=1.2DL+1.6LL

$\phi T_{th} = 4.35$ k·ft $> T_{OR} = 2.42$ k·ft $(SR = 0.56)$ ✓

Internal forces

Torsional moment

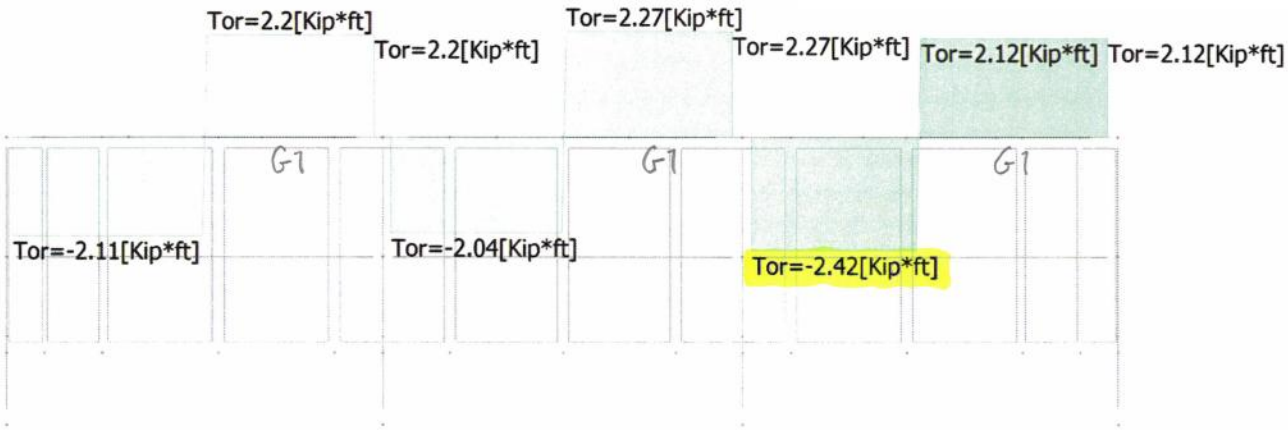

Bentley Microsoft

Current Date: 11/9/2016 9:50 AM
Units system: English
File name: C:\Users\nleonard\Documents\JMT Projects\Carter Barron Amphitheater\Stage Frame Analysis.etz\
Load condition: D2=1.2DL+1.6LL

BEAM G2 & G3

Internal forces

Bending moment

BEAM G2

ϕM_n @ CONT = -250.3 k·ft > $M_u = -161.61$ k·ft (SR = 0.65) ✓

ϕM_n @ MID = $+250.3$ k·ft > $M_u = +96.87$ k·ft (SR = 0.39) ✓

BEAM G3

ϕM_n @ END = -126.1 k·ft > $M_u = -79.09$ k·ft (SR = 0.63) ✓

ϕM_n @ CONT = -250.3 k·ft > $M_u = -188.35$ k·ft (SR = 0.75) ✓

ϕM_n @ MID = $+250.3$ k·ft > $M_u = +153.05$ k·ft (SR = 0.61) ✓

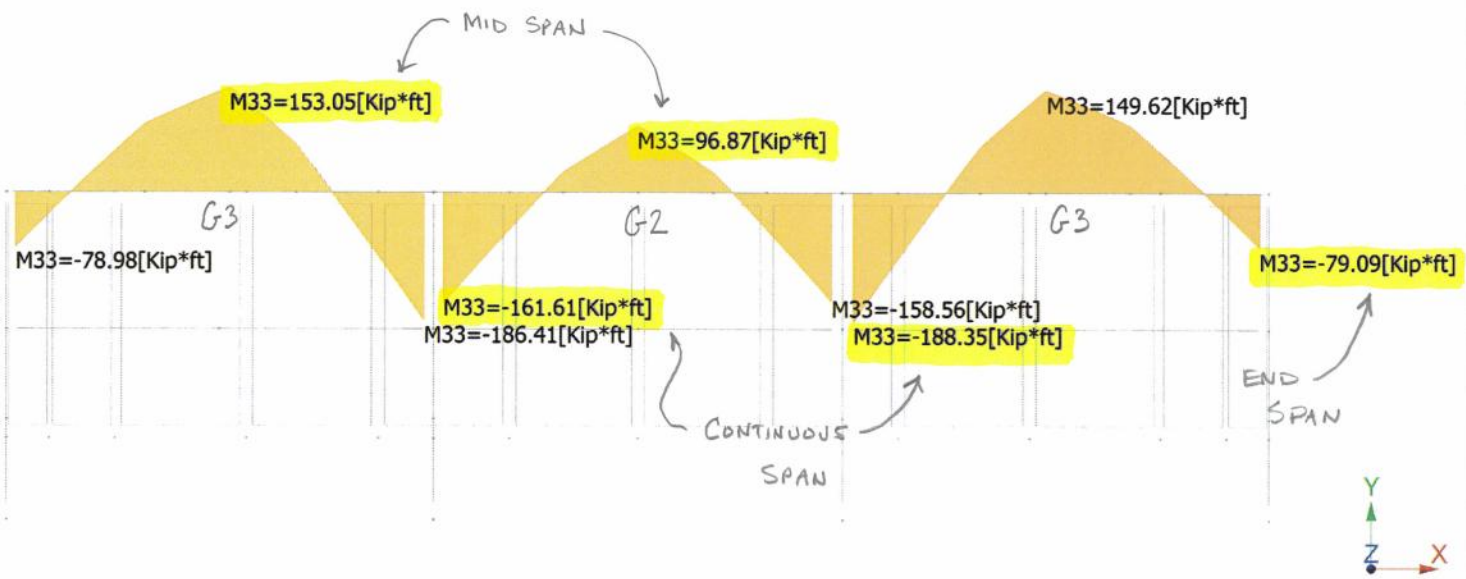

Bentley Microsoft

BEAM G2 & G3

Current Date: 11/9/2016 9:49 AM
Units system: English
File name: C:\Users\nleonard\Documents\JMT Projects\Carter Barron Amphitheater\Stage Frame Analysis.etz\
Load condition: D2=1.2DL+1.6LL

Internal forces

Shear force

BEAM G2

ϕV_n (0 thru 24) = 41.3 k > V_u = 27.52 k (SR = 0.67) ✓

ϕV_n (24 thru MID) = 12.0 k < V_u = 26.8 k (SR = 2.23) ✗

BEAM G3

ϕV_n (0 thru 32) = 41.3 k > V_u = 34.46 k (SR = 0.84) ✓

ϕV_n (32 thru MID) = 12.0 k < V_u = 33.5 k (SR = 2.79) ✗

In both instances, the beams cannot hold up only the dead weight.

(V_D = 10.55 k x 1.4 = 14.8 k)

(V_D = 12.9 k x 1.4 = 18.1 k)

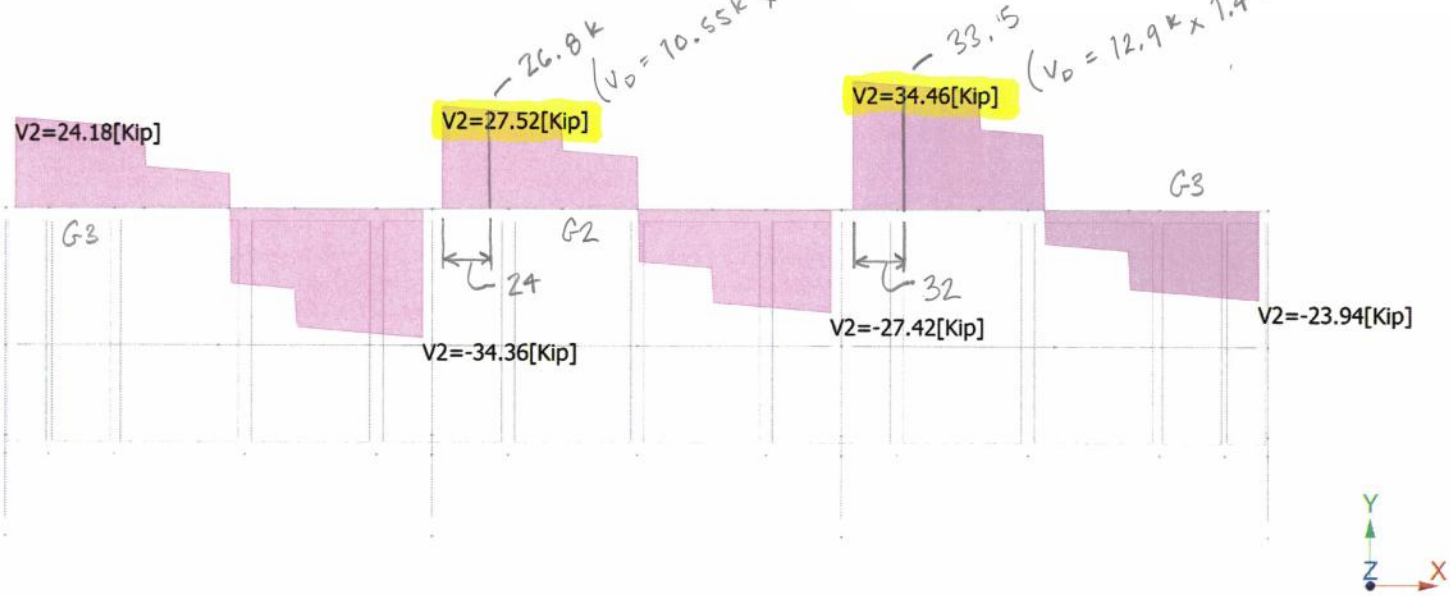

Bentley Microsoft

BEAM G2 & G3

Current Date: 11/9/2016 9:49 AM
Units system: English
File name: C:\Users\nleonard\Documents\JMT Projects\Carter Barron Amphitheater\Stage Frame Analysis.etz\
Load condition: D2=1.2DL+1.6LL

Internal forces

Torsional moment

BEAM G2

$\phi T_{th} = 6.55$ k·ft < TOR = 9.96 k·ft (SR = 1.52) ✗

BEAM G3

$\phi T_{th} = 6.55$ k·ft < TOR = 12.68 k·ft (SR = 1.94) ✗

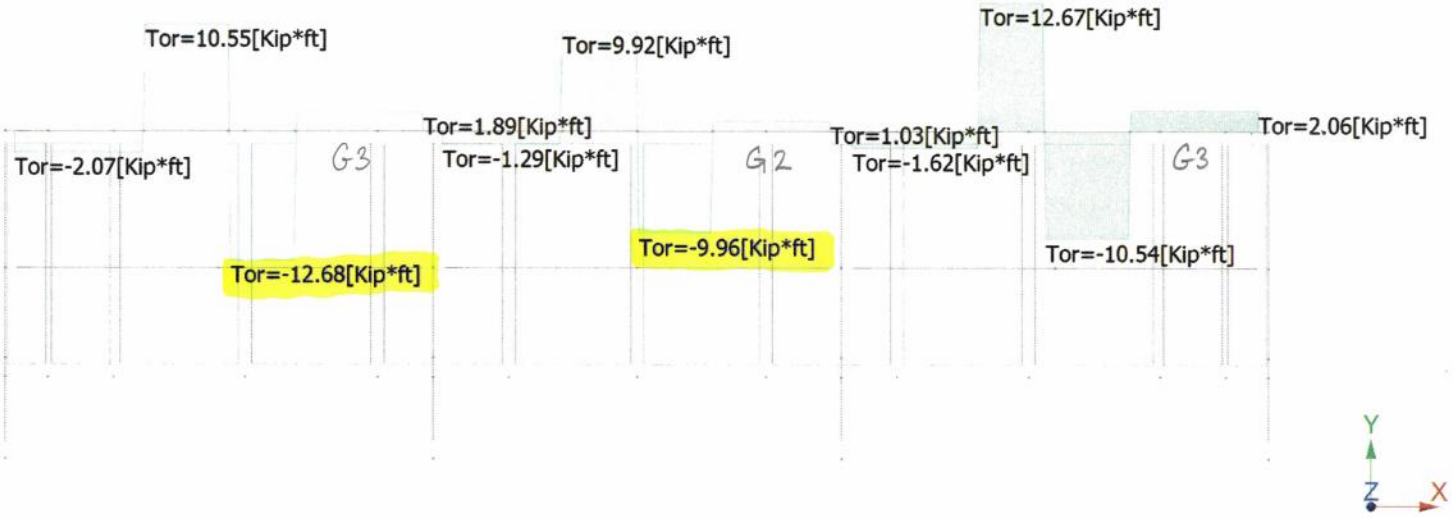

BEAM G7 & G8

Internal forces

Bending moment

BEAM G7

ϕM_n @ END = − 126.1 k·ft > M_u = − 51.27 k·ft (SR = 0.41) ✓

ϕM_n @ CONT. = − 228.5 k·ft ≈ M_u = − 236.06 k·ft (SR = 1.03)*

ϕM_n @ MID = + 228.5 k·ft > M_u = + 177.41 k·ft (SR = 0.78) ✓

* BEAM G7 HAS AN INFLUENCE AREA = 676 ft²; THEREFORE A LL REDUCTION OF $\left(0.25 + \frac{15}{\sqrt{676}}\right) = 0.827$

$\therefore$ $M_{u_{alt}} = 1.2(-88.49) + 1.6(0.827)(-81.17) = -213.6$ k·ft

[SR = 0.95] ✓

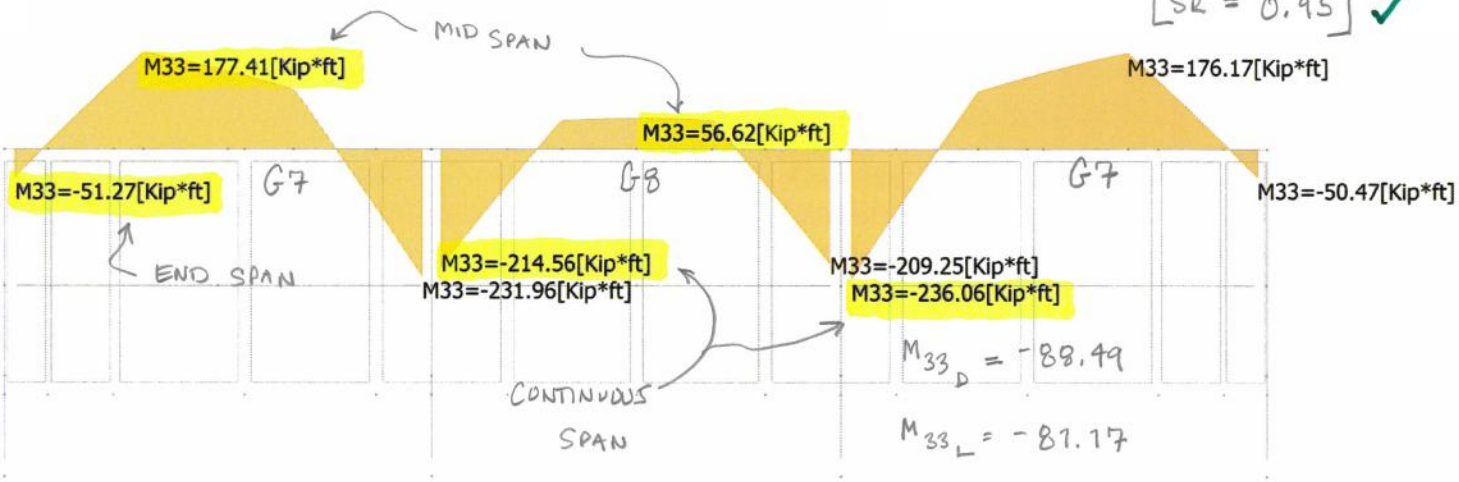

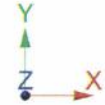

BEAM G8

ϕM_n @ CONT = − 228.5 k·ft > M_u = − 214.56 k·ft (SR = 0.94) ✓

ϕM_n @ MID = + 228.5 k·ft > M_u = + 56.62 k·ft (SR = 0.25) ✓

Bentley Microsoft

Current Date: 11/9/2016 10:13 AM
Units system: English
File name: C:\Users\nleonard\Documents\JMT Projects\Carter Barron Amphitheater\Stage Frame Analysis.etz\
Load condition: D2=1.2DL+1.6LL

BEAM G7 & G8

Internal forces

Shear force

BEAM G7

ϕV_n (0 thru 32) = 41.3 k < V_u = 45.7 k (SR = 1.11) ✗ ← This is mostly caused by the added weight from the infills.

ϕV_n (32 thru MID) = 12.0 k < V_u = 44.7 k (SR = 3.73) ✗

BEAM G8

ϕV_n (0 thru 32) = 41.3 k > V_u = 37.93 k (SR = 0.92) ✓

ϕV_n (32 thru MID) = 12.0 k < V_u = 36.9 k (SR = 3.08) ✗

Beams cannot hold up the dead load only.

(V_D = 14.1 × 1.4 = 19.74 k)

(V_D = 16.8 × 1.4 = 23.5 k)

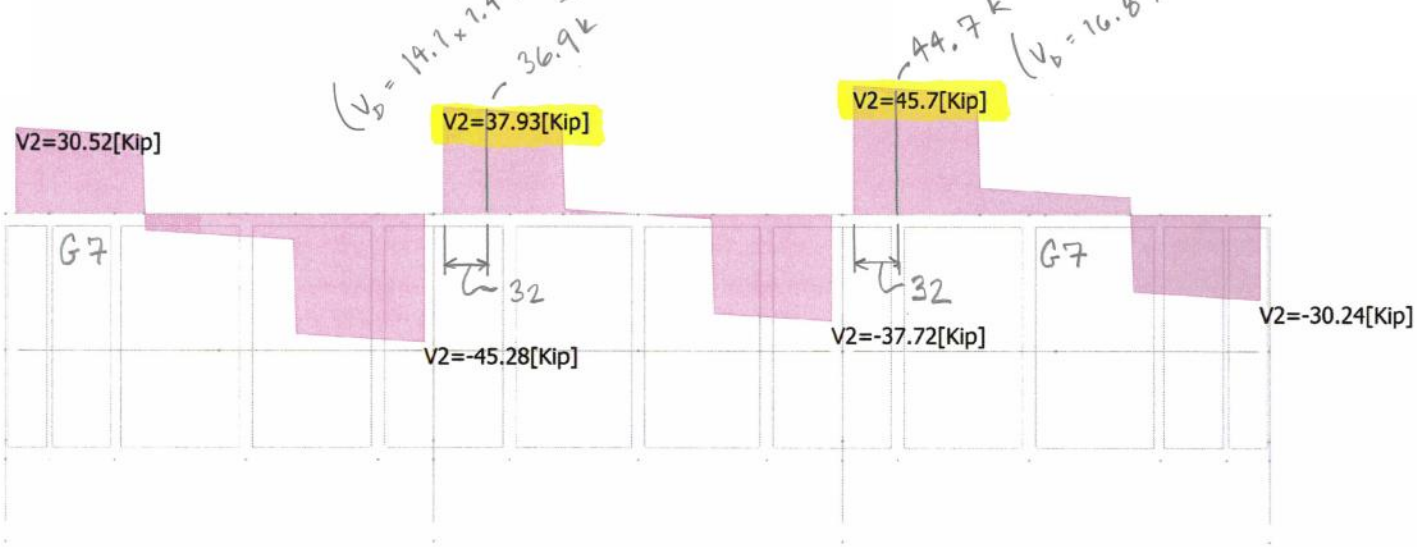

Bentley Microsoft

BEAM G7 & G8

Current Date: 11/9/2016 10:13 AM
Units system: English
File name: C:\Users\nleonard\Documents\JMT Projects\Carter Barron Amphitheater\Stage Frame Analysis.etz\
Load condition: D2=1.2DL+1.6LL

Internal forces

Torsional moment

BEAM G7

$\phi T_{th} = 6.55$ k·ft > TOR = 0.863 k·ft (SR = 0.13) ✓

BEAM G8

$\phi T_{th} = 6.55$ k·ft > TOR = 0.337 k·ft (SR = 0.05) ✓

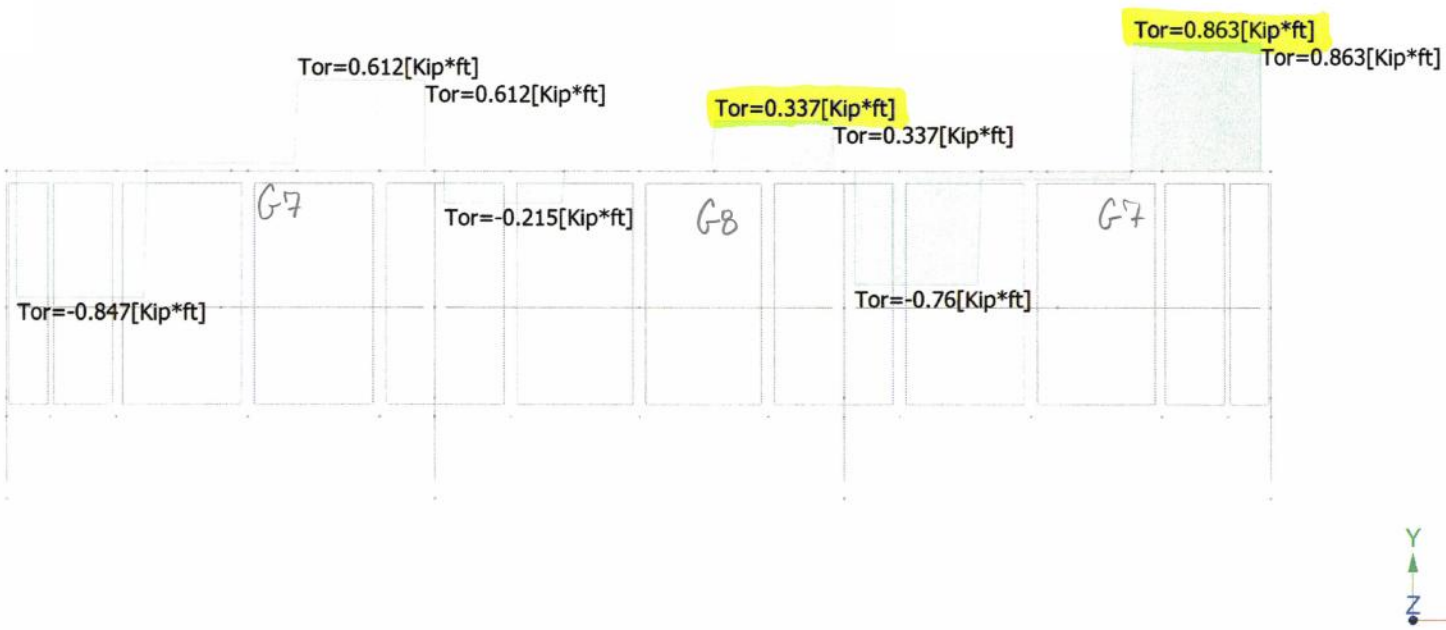

BEAM G9 & G10

Internal forces

Bending moment

BEAM G9

ϕM_n @ END = -126.1 k·ft > M_u = -30.39 k·ft (SR = 0.24) ✓

ϕM_n @ CONT = -228.5 k·ft > M_u = -195.03 k·ft (SR = 0.85) ✓

ϕM_n @ MID = +228.5 k·ft > M_u = +143.92 k·ft (SR = 0.63) ✓

BEAM G-10

ϕM_n @ CONT. = -228.5 k·ft > M_u = -174.52 k·ft (SR = 0.76) ✓

ϕM_n @ MID = +228.5 k·ft > M_u = +44.09 k·ft (SR = 0.19) ✓

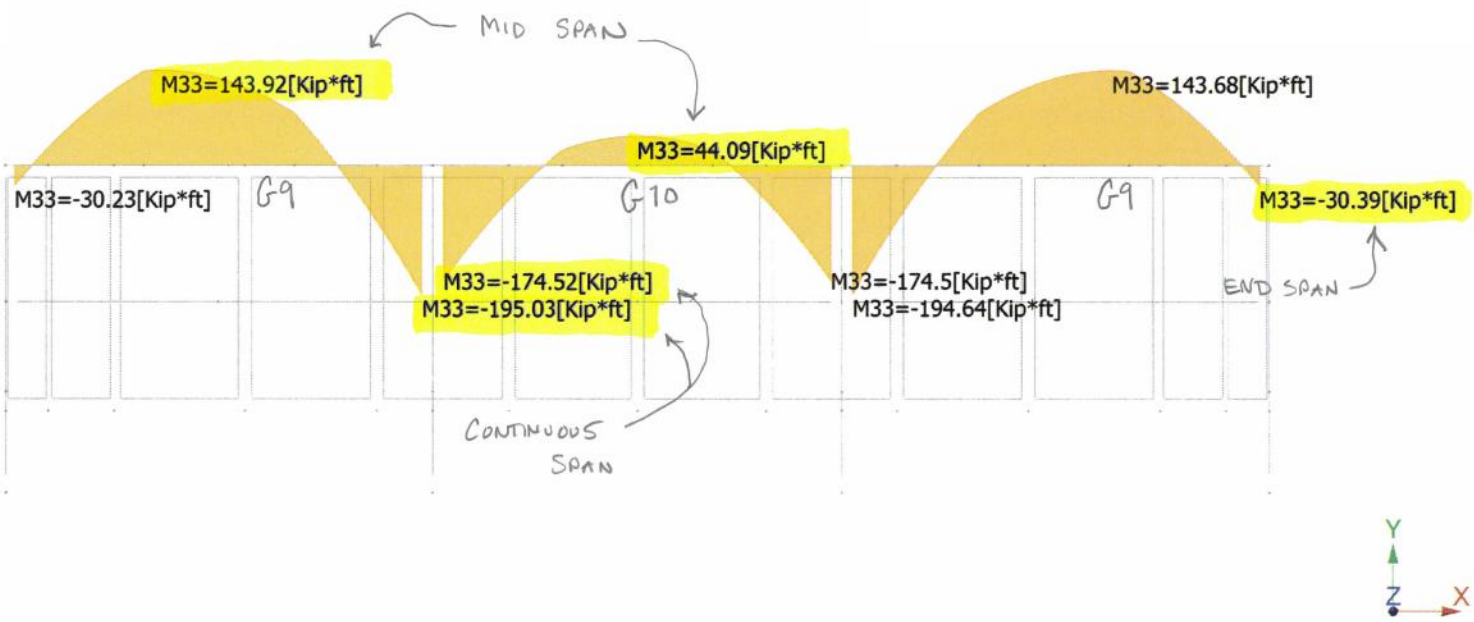

BEAM G9 & G10

Internal forces

Shear force

BEAM G9

ϕV_n (0 thru 32) = 41.3^k ≈ V_u = 43.18^k (SR = 1.05)* ✓

ϕV_n (32 thru MID) = 12.0^k < V_u = 37.8^k (SR = 3.15) ✗ ← Cannot hold dead load only

* Beam G9 has an influence area = 715 FT^2; therefore, a LL reduction factor of $\left(0.25 + \frac{15}{\sqrt{715}}\right) = 0.811$

$\therefore V_{u_{alt}} = 1.2(15.68) + 1.6(0.811)(15.23) = 38.6^k$

[SR = 0.95] ✓

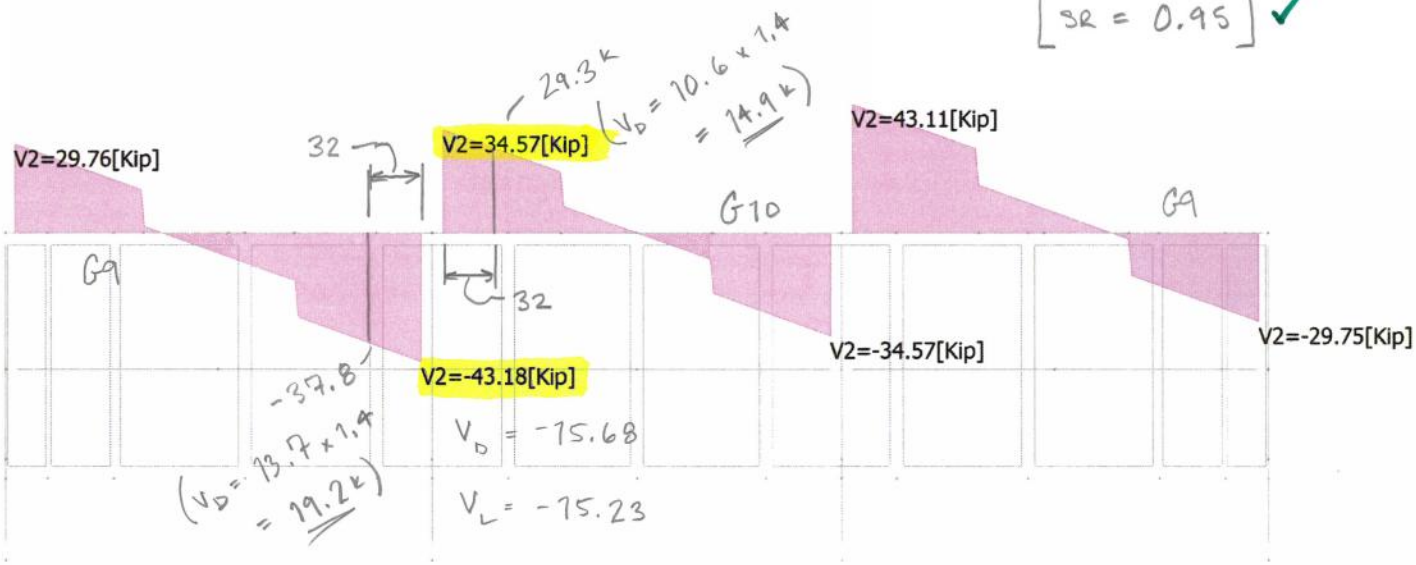

BEAM G10

ϕV_n (0 thru 32) = 41.3^k > V_u = 34.57^k (SR = 0.84) ✓

ϕV_n (32 thru MID) = 12.0^k < V_u = 29.3^k (SR = 2.44) ✗ ← Cannot hold dead load only

Bentley Microsoft

BEAM G9 & G10

Current Date: 11/9/2016 10:39 AM
Units system: English
File name: C:\Users\nleonard\Documents\JMT Projects\Carter Barron Amphitheater\Stage Frame Analysis.etz\
Load condition: D2=1.2DL+1.6LL

Internal forces

Torsional moment

BEAM G9

$\phi T_{th} = 6.55$ k·ft > TOR = 2.94 k ft (SR = 0.45) ✓

BEAM G10

$\phi T_{th} = 5.52$ k·ft > TOR = 2.41 k·ft (SR = 0.44) ✓

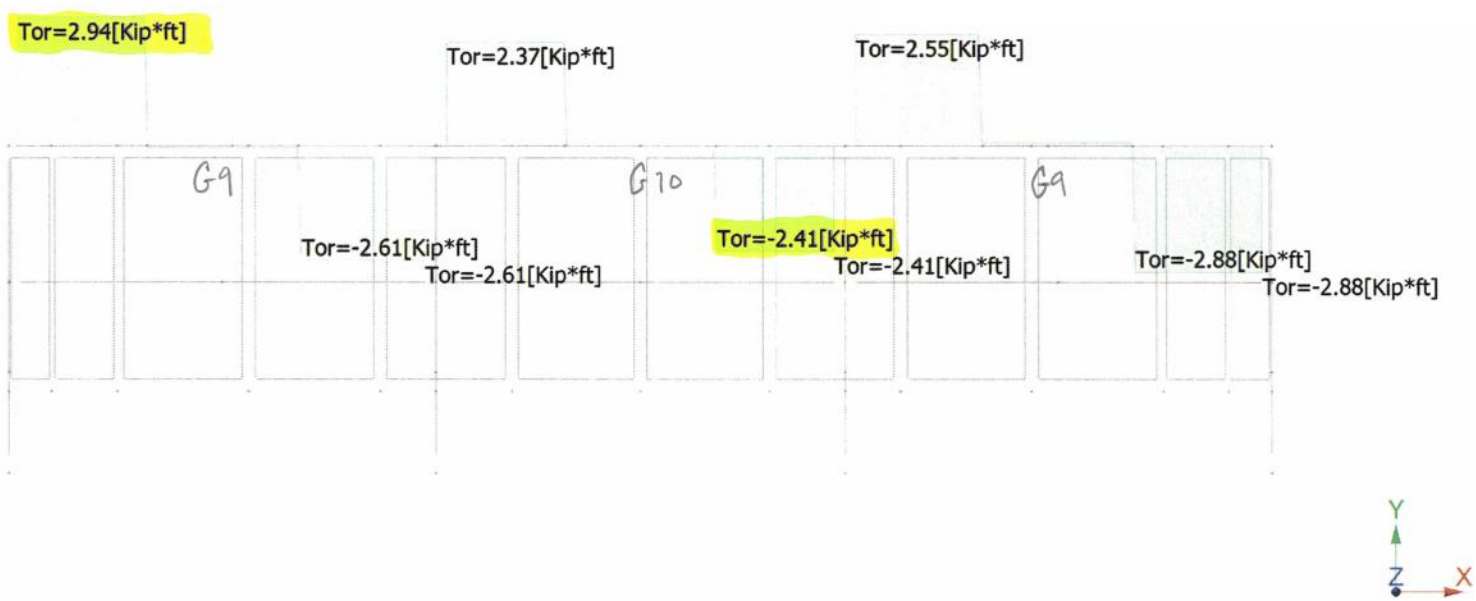

Bentley Microsoft

Current Date: 11/9/2016 11:02 AM
Units system: English
File name: C:\Users\nleonard\Documents\JMT Projects\Carter Barron Amphitheater\Stage Frame Analysis.etz\
Load condition: D2=1.2DL+1.6LL

BEAM B1

ϕM_n @ END = − 72.2 k·ft > M_u = − 51.06 k·ft (SR = 0.71) ✓

ϕM_n @ CONT = − 122.1 k·ft > M_u = − 69.92 k·ft (SR = 0.57) ✓

ϕM_n @ MID = + 137.0 k·ft > M_u = + 117.05 k·ft (SR = 0.86) ✓

Internal forces

Bending moment

Bentley Microsoft

BEAM B1

Current Date: 11/9/2016 11:03 AM
Units system: English
File name: C:\Users\nleonard\Documents\JMT Projects\Carter Barron Amphitheater\Stage Frame Analysis.etz\
Load condition: D2=1.2DL+1.6LL

ϕV_n (0 thru 12) = 35.8^k > V_u = 29.23^k (SR = 0.82) ✓

ϕV_n (12 thru 36) = 31.4^k > V_u = 25.8^k (SR = 0.82) ✓

ϕV_n (36 thru MID) = 9.11^k V_u = 19.1^k (SR = 2.10) ✗ ← Cannot hold dead load only.

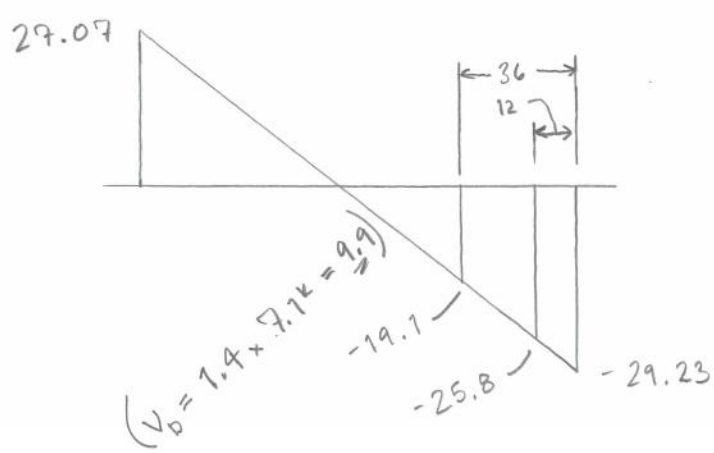

Bentley Microsoft

Current Date: 11/9/2016 11:03 AM
Units system: English
File name: C:\Users\nleonard\Documents\JMT Projects\Carter Barron Amphitheater\Stage Frame Analysis.etz\
Load condition: D2=1.2DL+1.6LL

BEAM B1

By inspection, TORSION is negligible

Internal forces

Torsional moment

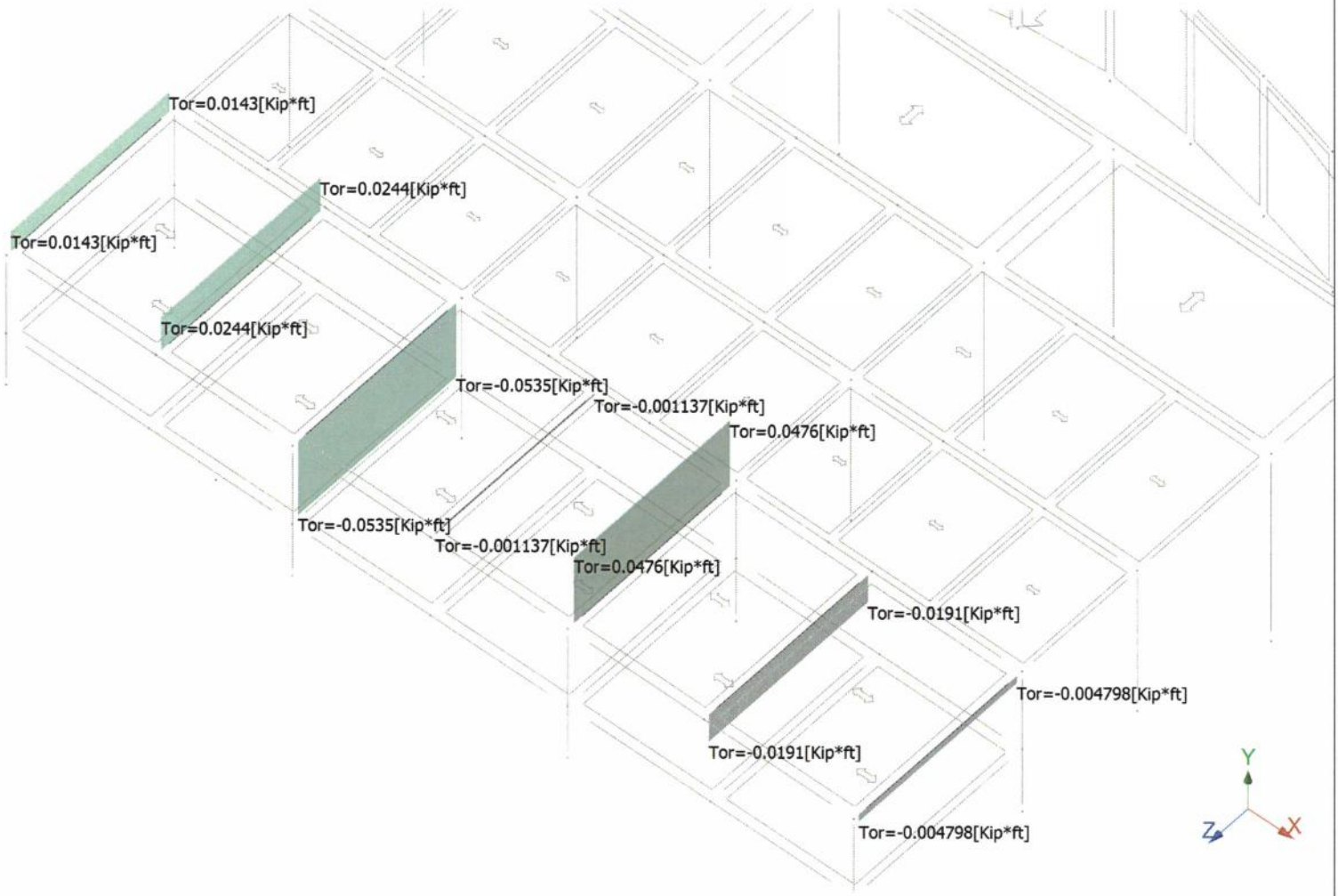

Bentley Microsoft

Current Date: 11/9/2016 11:18 AM
Units system: English
File name: C:\Users\nleonard\Documents\JMT Projects\Carter Barron Amphitheater\Stage Frame Analysis.etz\
Load condition: D2=1.2DL+1.6LL

BEAM B2 & B21

Internal forces

Bending moment

BEAM B2

ϕM_n @ CONT. = -228.5 k·ft > M_u = -184.97 k·ft (SR = 0.81) ✓

ϕM_n @ MID = +228.5 k·ft > M_u = +66.79 k·ft (SR = 0.29) ✓

BEAM B21

ϕM_n @ END = -126.1 k·ft > M_u = -27.48 k·ft (SR = 0.22) ✓

ϕM_n @ CONT. = -228.5 k·ft > M_u = -198.97 k·ft (SR = 0.87) ✓

ϕM_n @ MID = +228.5 k·ft > 127.34 k·ft (SR = 0.56) ✓

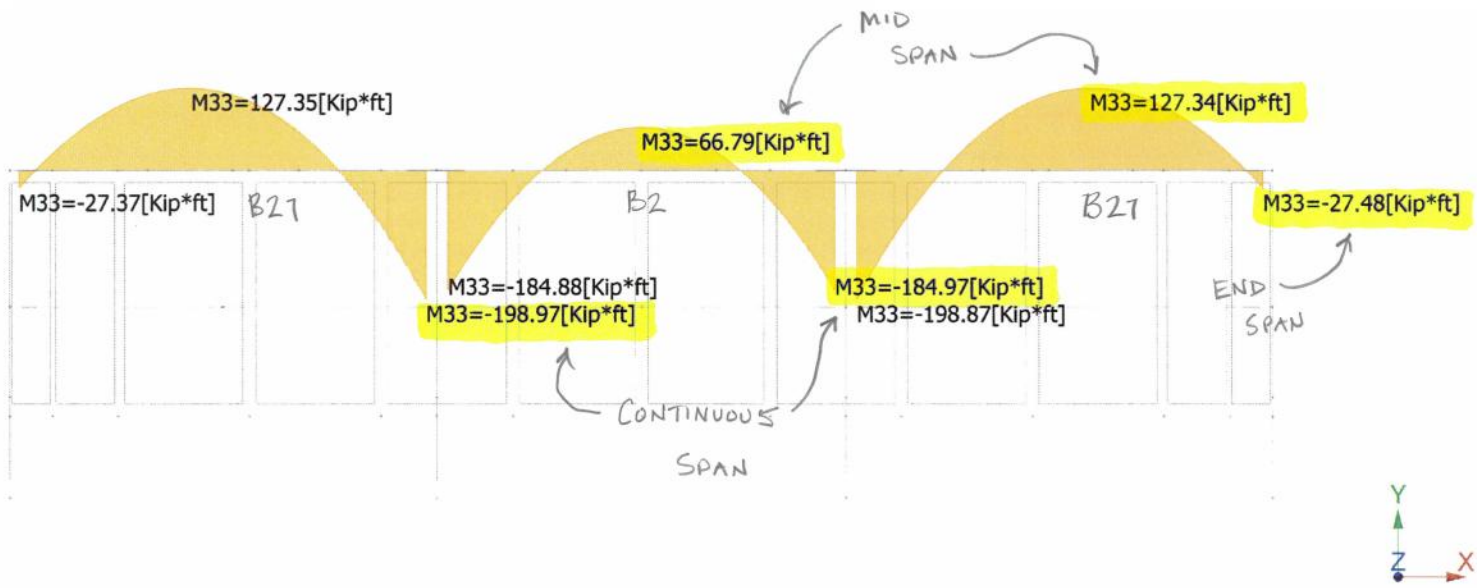

BEAM B2 & B21

Internal forces

Shear force

BEAM B2

ϕV_n (0 thru 30) = 47.0^k > V_u = 42.35^k (SR = 0.90) ✓

ϕV_n (30 thru 62) = 41.3^k > V_u = 33.6^k (SR = 0.81) ✓

ϕV_n (62 thru MID) = 12.0^k < V_u = 24.0^k (SR = 2.0) ✗

Can barely hold dead load only; therefore, very minimal live load

BEAM B21

ϕV_n (0 thru 30) = 47.0^k > V_u = 46.71^k (SR = 0.99) ✓

ϕV_n (30 thru 62) = 41.3^k > V_u = 38.8^k (SR = 0.94) ✓

ϕV_n (62 thru MID) = 12.0^k < V_u = 29.8^k (SR = 2.48) ✗

Cannot hold dead load only.

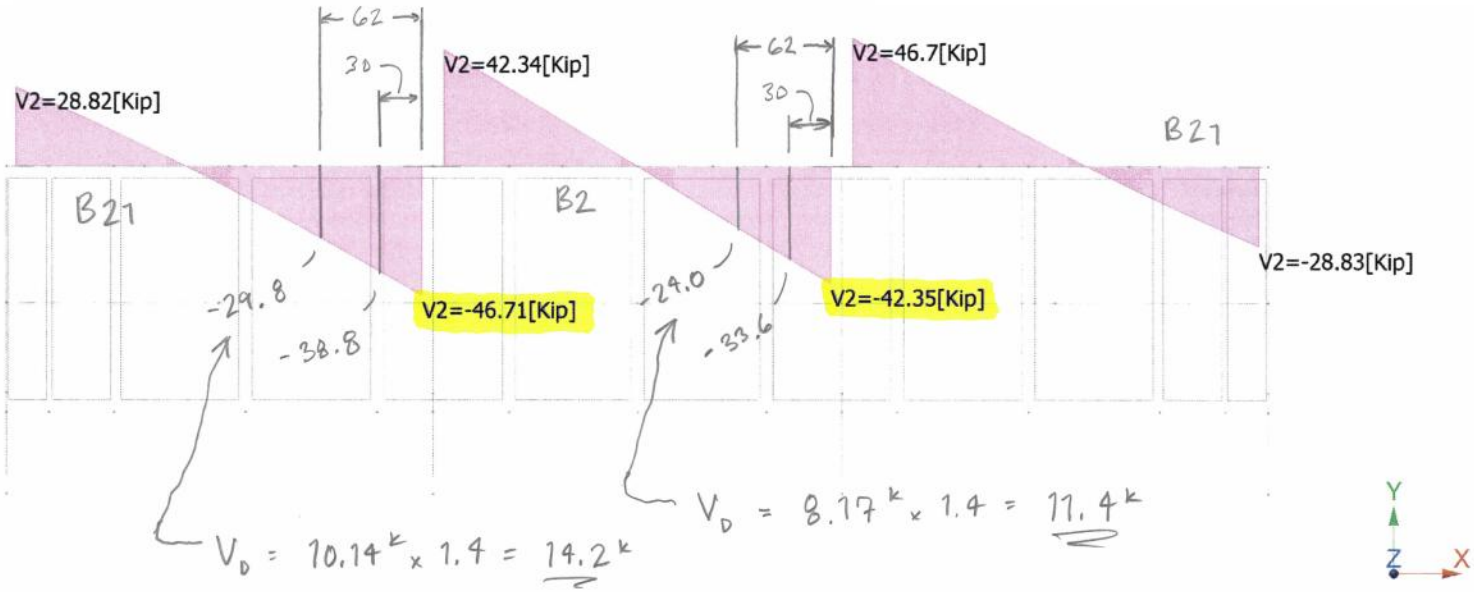

V_D = 10.14^k x 1.4 = 14.2^k

V_D = 8.17^k x 1.4 = 11.4^k

Bentley Microsoft

BEAM B2 & B21

Current Date: 11/9/2016 11:18 AM
Units system: English
File name: C:\Users\nleonard\Documents\JMT Projects\Carter Barron Amphitheater\Stage Frame Analysis.etz\
Load condition: D2=1.2DL+1.6LL

By inspection, TORSION is negligible

Internal forces

Torsional moment

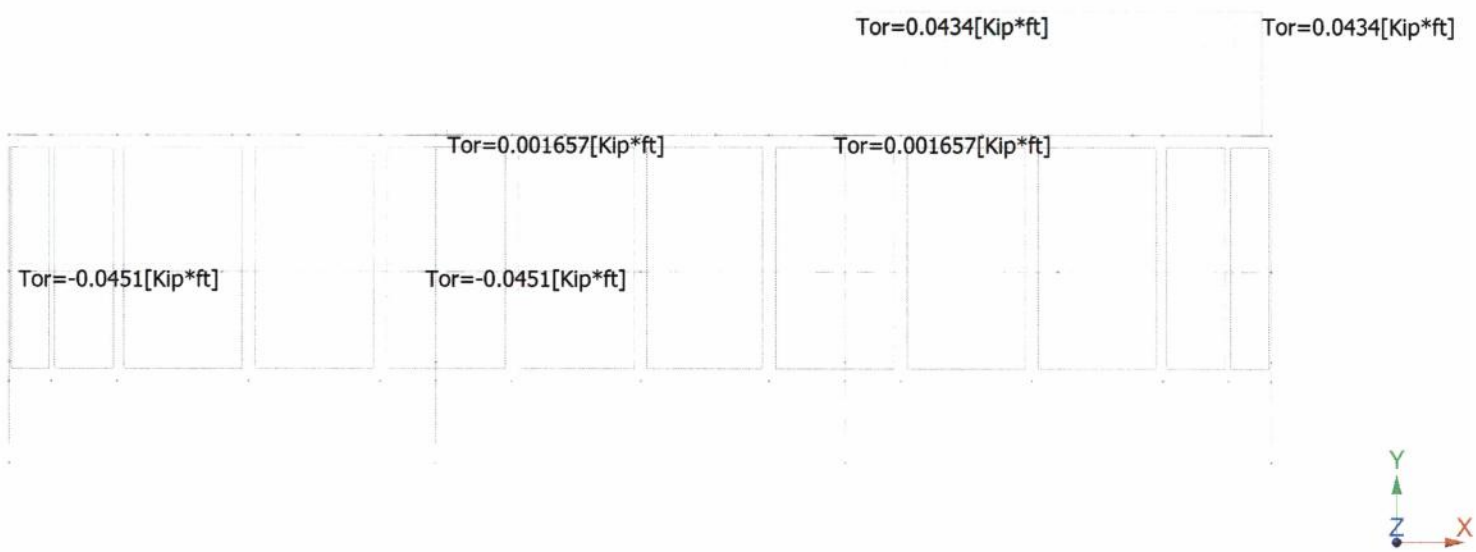

Bentley Microsoft

Current Date: 11/9/2016 11:47 AM
Units system: English
File name: C:\Users\nleonard\Documents\JMT Projects\Carter Barron Amphitheater\Stage Frame Analysis.etz\
Load condition: D2=1.2DL+1.6LL

BEAM B3 / B4

ϕM_n @ END = − 30.5 k·ft > M_u = − 9.47 k·ft (SR = 0.31) ✓

ϕM_n @ CONT = − 58.8 k·ft > M_u = − 41.46 k·ft (SR = 0.71) ✓

ϕM_n @ MID = + 58.8 k·ft > M_u = + 34.06 k·ft (SR = 0.58) ✓

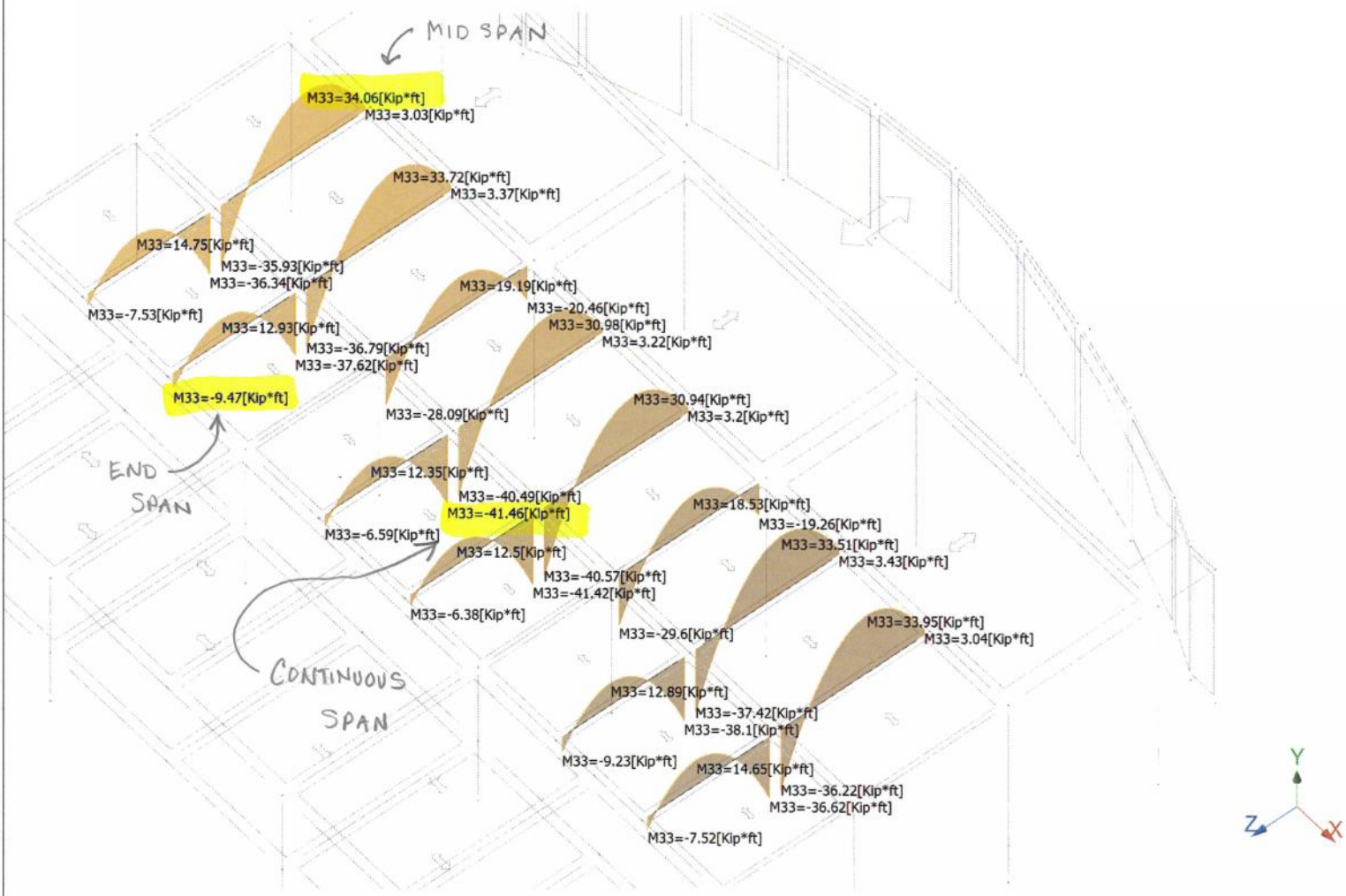

Bentley Microsoft

BEAM B3 / B4

Current Date: 11/9/2016 11:47 AM
Units system: English
File name: C:\Users\nleonard\Documents\JMT Projects\Carter Barron Amphitheater\Stage Frame Analysis.etz\
Load condition: D2=1.2DL+1.6LL

$\phi V_n = 13.7^k < V_u = 18.14^k \quad (SR = 1.33)$ ✗

$13.7 = 1.2(5.94) + 1.6\,L$

$\therefore L = 4.77^k$

$\therefore LL_{allow} = 100\left(\frac{4.77}{6.88}\right)$

$\approx \underline{60\ PSF}$

Internal forces

Shear force

Bentley Microsoft

BEAM B3 / B4

Current Date: 11/9/2016 11:48 AM
Units system: English
File name: C:\Users\nleonard\Documents\JMT Projects\Carter Barron Amphitheater\Stage Frame Analysis.etz\
Load condition: D2=1.2DL+1.6LL

By inspection, TORSION is negligible

Internal forces

Torsional moment

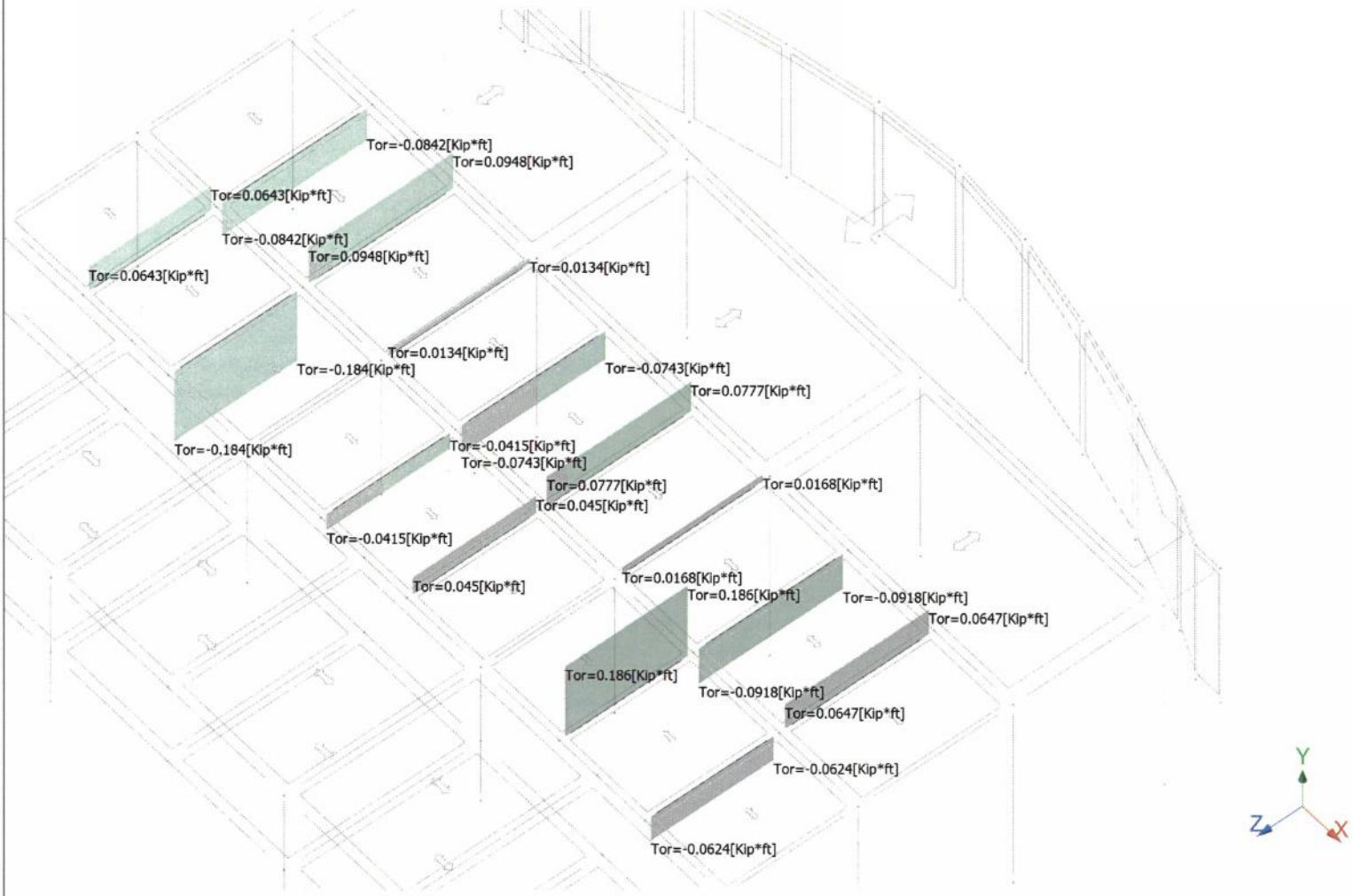

Bentley Microsoft

Current Date: 11/9/2016 11:59 AM
Units system: English
File name: C:\Users\nleonard\Documents\JMT Projects\Carter Barron Amphitheater\Stage Frame Analysis.etz\
Load condition: D2=1.2DL+1.6LL

BEAM B15

Internal forces

Bending moment

ϕM_n @ CONT = − 77.9 k·ft > M_u = − 16.11 k·ft (SR = 0.21) ✓

ϕM_n @ MID = + 77.9 k·ft > M_u = + 11.83 k·ft (SR = 0.15) ✓

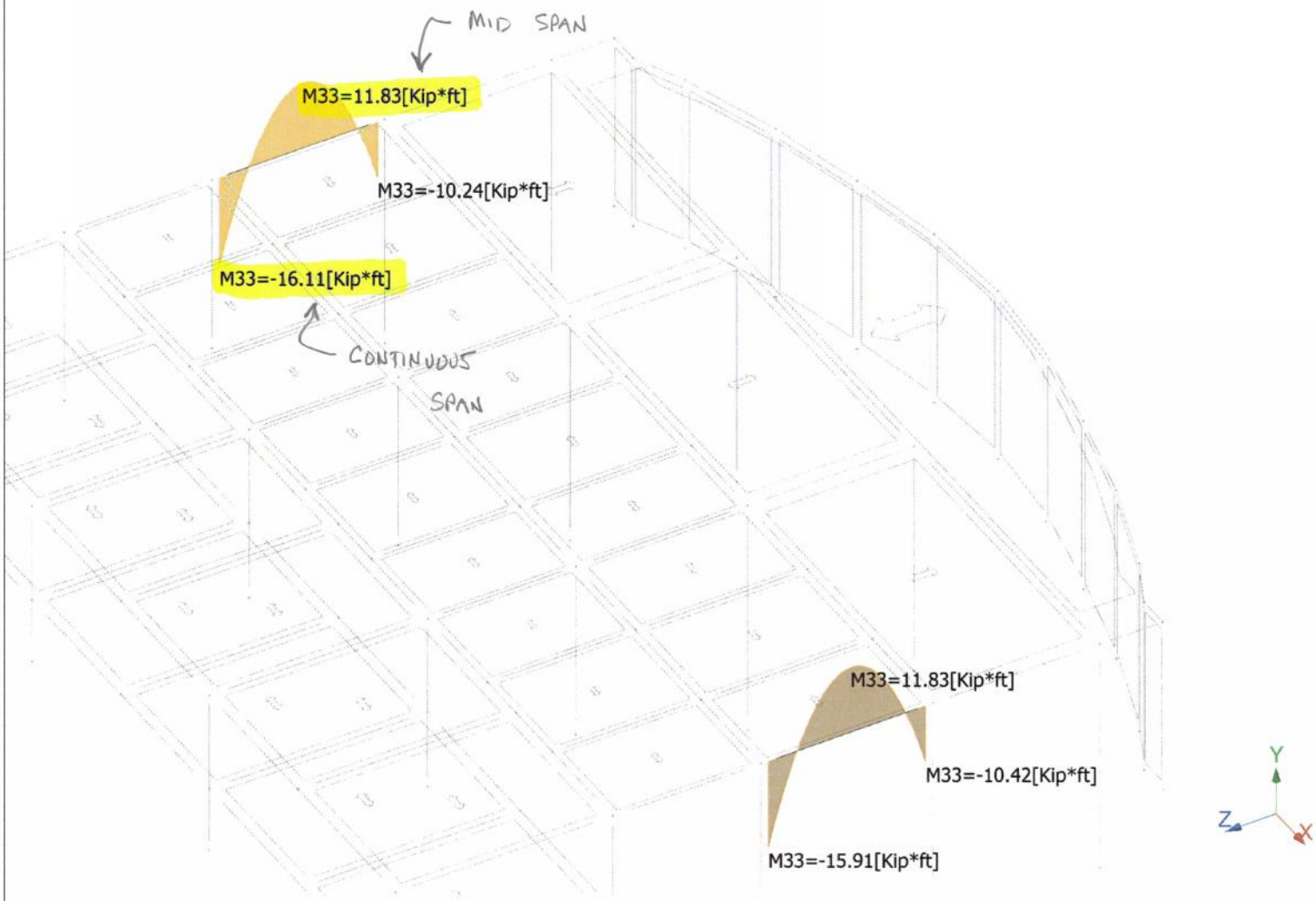

Bentley Microsoft

Current Date: 11/9/2016 12:00 PM
Units system: English
File name: C:\Users\nleonard\Documents\JMT Projects\Carter Barron Amphitheater\Stage Frame Analysis.etz\
Load condition: D2=1.2DL+1.6LL

BEAM B15

Internal forces

Shear force

ϕV_n (0 thru 30) = 19.5^k > V_u = 8.28^k (SR = 0.43) ✓

ϕV_n (30 thru MID) = 13.7^k > V_u = 5.2^k (SR = 0.38) ✓

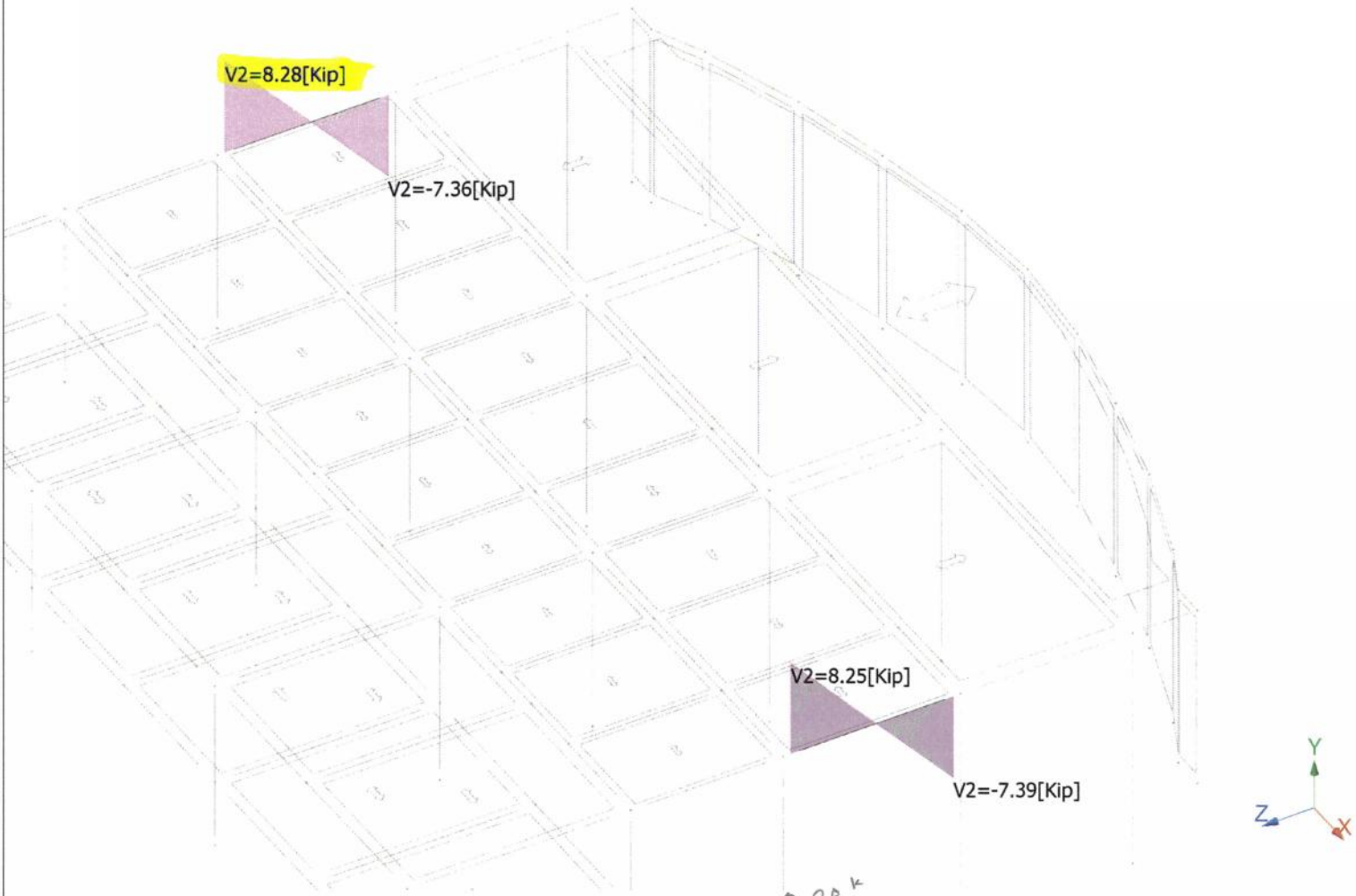

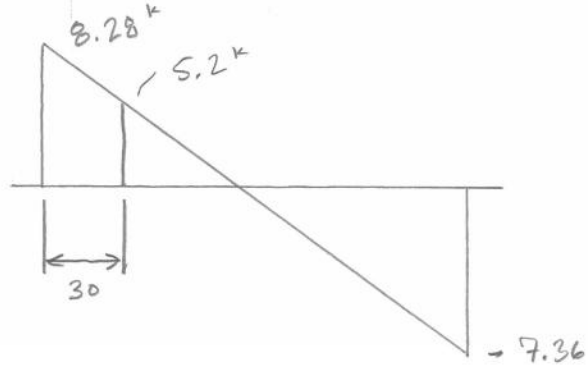

Bentley Microsoft

BEAM B15

Current Date: 11/9/2016 11:59 AM
Units system: English
File name: C:\Users\nleonard\Documents\JMT Projects\Carter Barron Amphitheater\Stage Frame Analysis.etz\
Load condition: D2=1.2DL+1.6LL

By inspection, TORSION is negligible

Bentley Microsoft

Current Date: 11/9/2016 12:12 PM
Units system: English
File name: C:\Users\nleonard\Documents\JMT Projects\Carter Barron Amphitheater\Stage Frame Analysis.etz\
Load condition: D2=1.2DL+1.6LL

BEAM B17

Internal forces

Bending moment

ϕM_n @ CONT = − 77.9 k·ft > M_u = − 29.85 k·ft (SR = 0.38) ✓

ϕM_n @ MID = + 41.1 k·ft > M_u = 6.82 k·ft (SR = 0.19) ✓

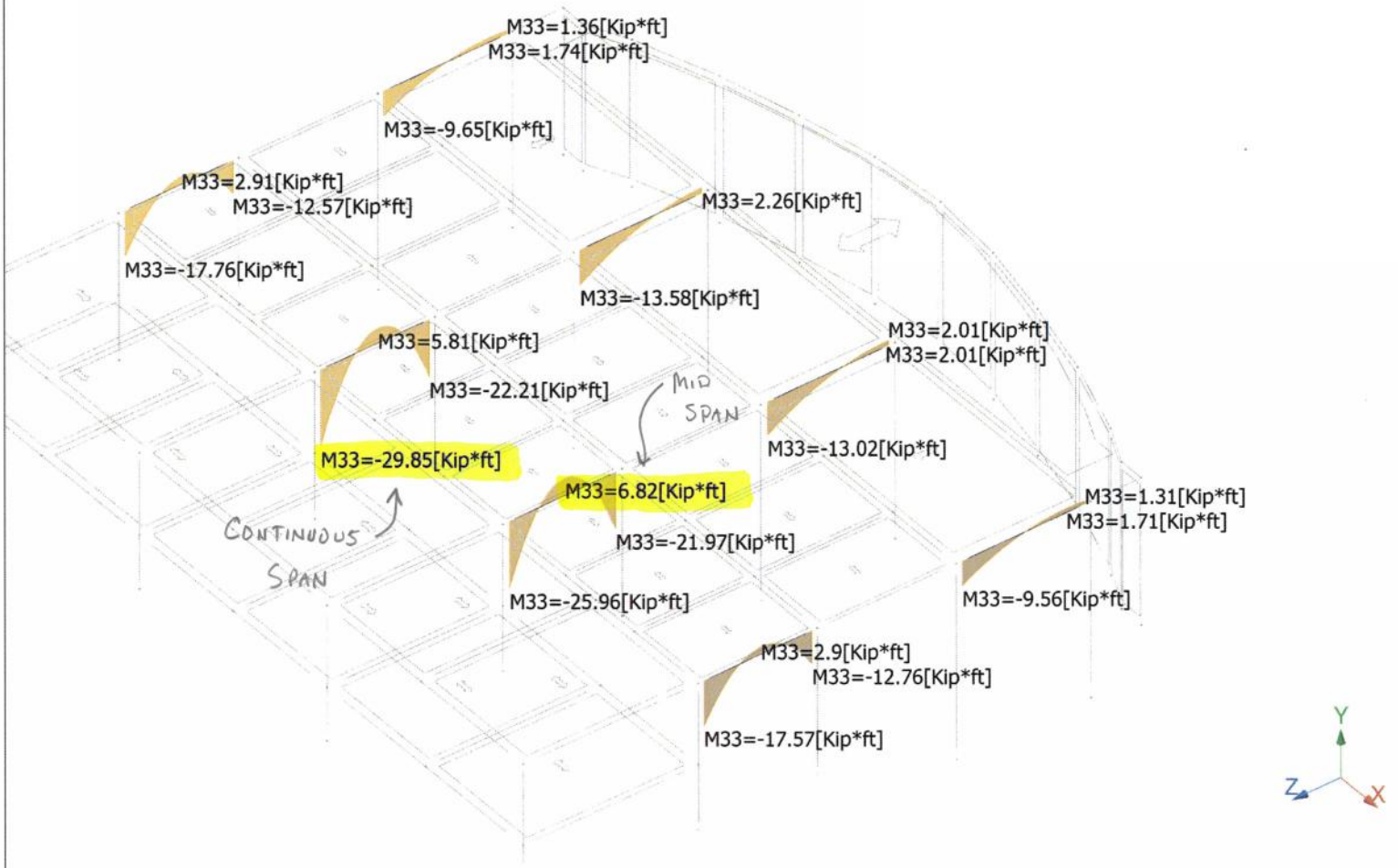

Bentley Microsoft

BEAM B17

Current Date: 11/9/2016 12:12 PM
Units system: English
File name: C:\Users\nleonard\Documents\JMT Projects\Carter Barron Amphitheater\Stage Frame Analysis.etz\
Load condition: D2=1.2DL+1.6LL

$\phi V_n = 13.7^k > V_u = 12.42^k$ (SR = 0.91) ✓

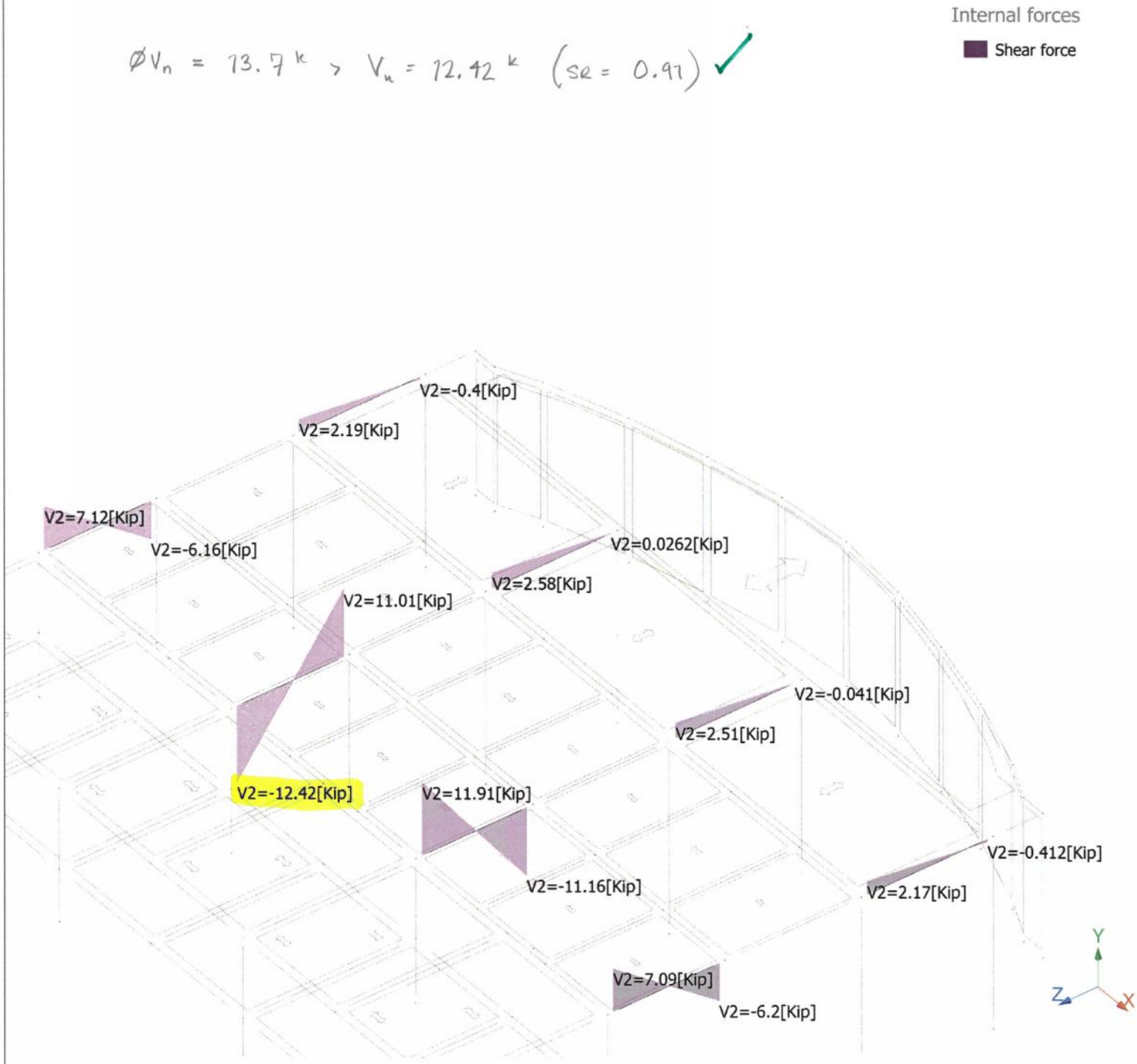

Bentley Microsoft

Current Date: 11/9/2016 12:12 PM
Units system: English
File name: C:\Users\nleonard\Documents\JMT Projects\Carter Barron Amphitheater\Stage Frame Analysis.etz\
Load condition: D2=1.2DL+1.6LL

BEAM B17

Internal forces

Torsional moment

$\phi T_{th} = 2.65$ k·ft > $T_{OR} = 0.521$ k·ft (SR = 0.20) ✓

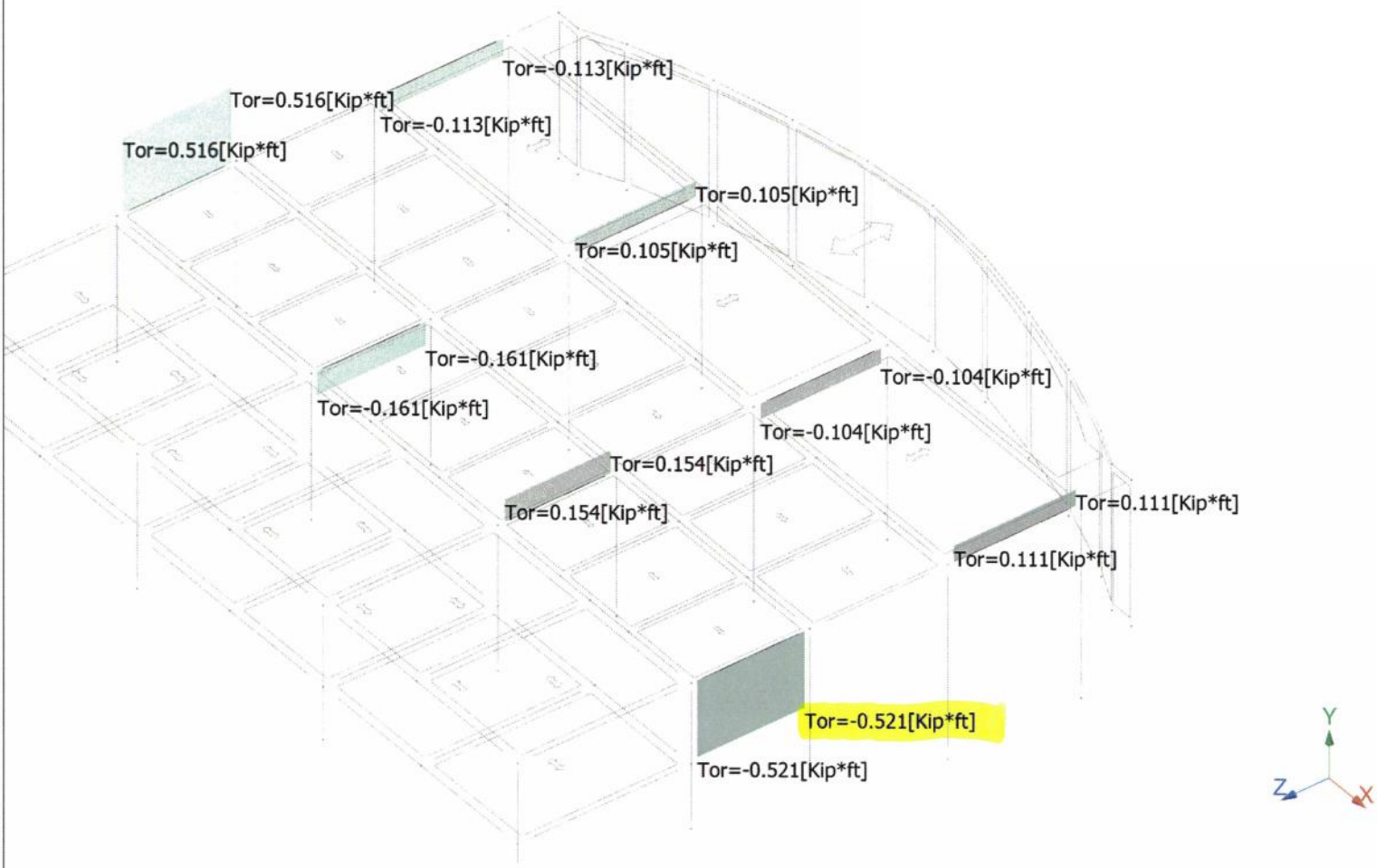

Bentley Microsoft

Current Date: 11/9/2016 12:21 PM
Units system: English
File name: C:\Users\nleonard\Documents\JMT Projects\Carter Barron Amphitheater\Stage Frame Analysis.etz\
Load condition: D2=1.2DL+1.6LL

BEAM B27

Internal forces

Bending moment

ϕM_n @ NEG = -30.5 k·ft > M_u = 1.58 k·ft (SR = 0.05) ✓

ϕM_n @ POS. = $+30.5$ k·ft > M_u = 1.68 k·ft (SR = 0.06) ✓

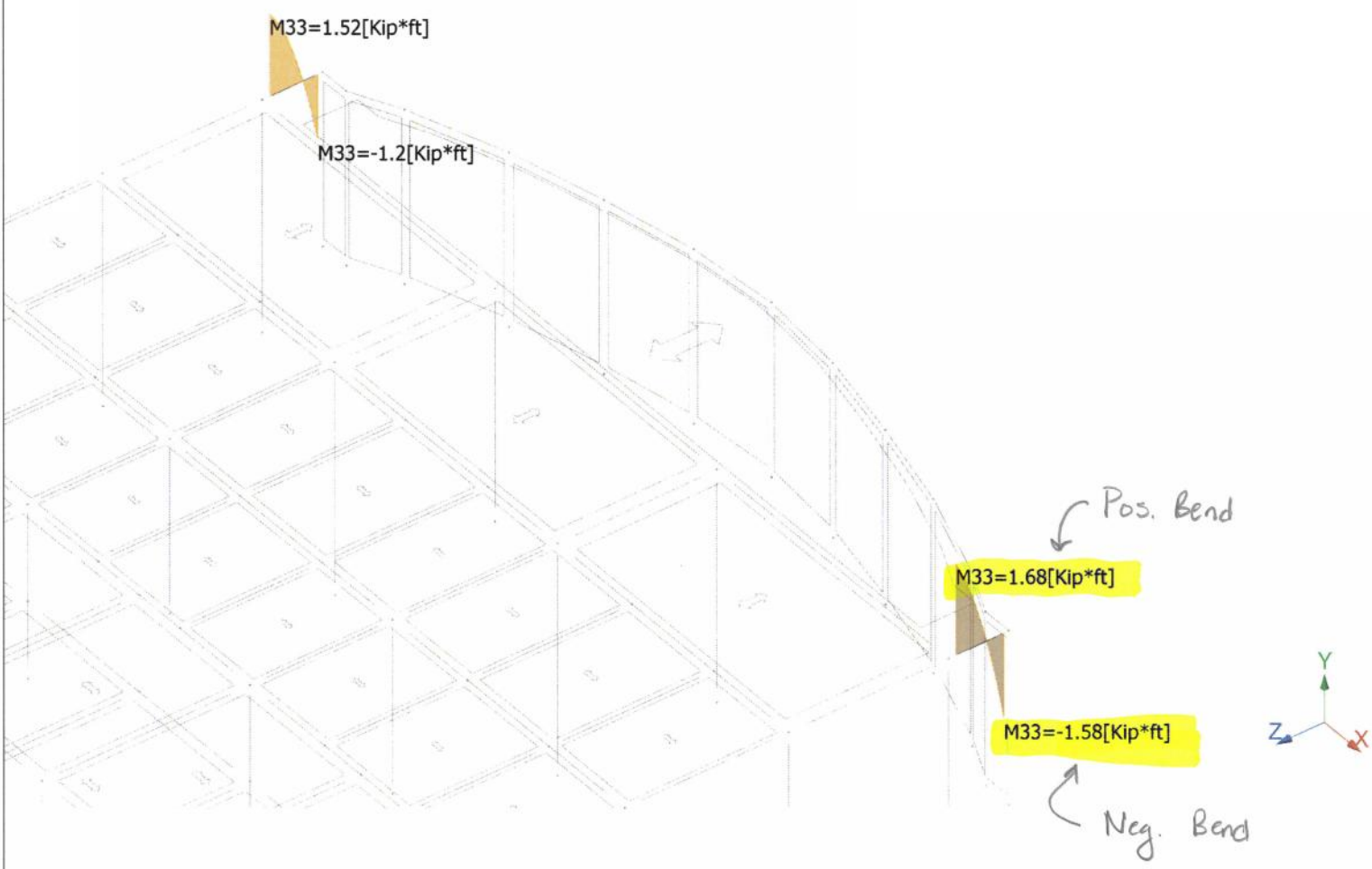

Bentley Microsoft

Current Date: 11/9/2016 12:21 PM
Units system: English
File name: C:\Users\nleonard\Documents\JMT Projects\Carter Barron Amphitheater\Stage Frame Analysis.etz\
Load condition: D2=1.2DL+1.6LL

BEAM B27

$\phi V_n = 13.7^k > V_u = 1.23^k$ (SR = 0.09) ✓

Internal forces

Shear force

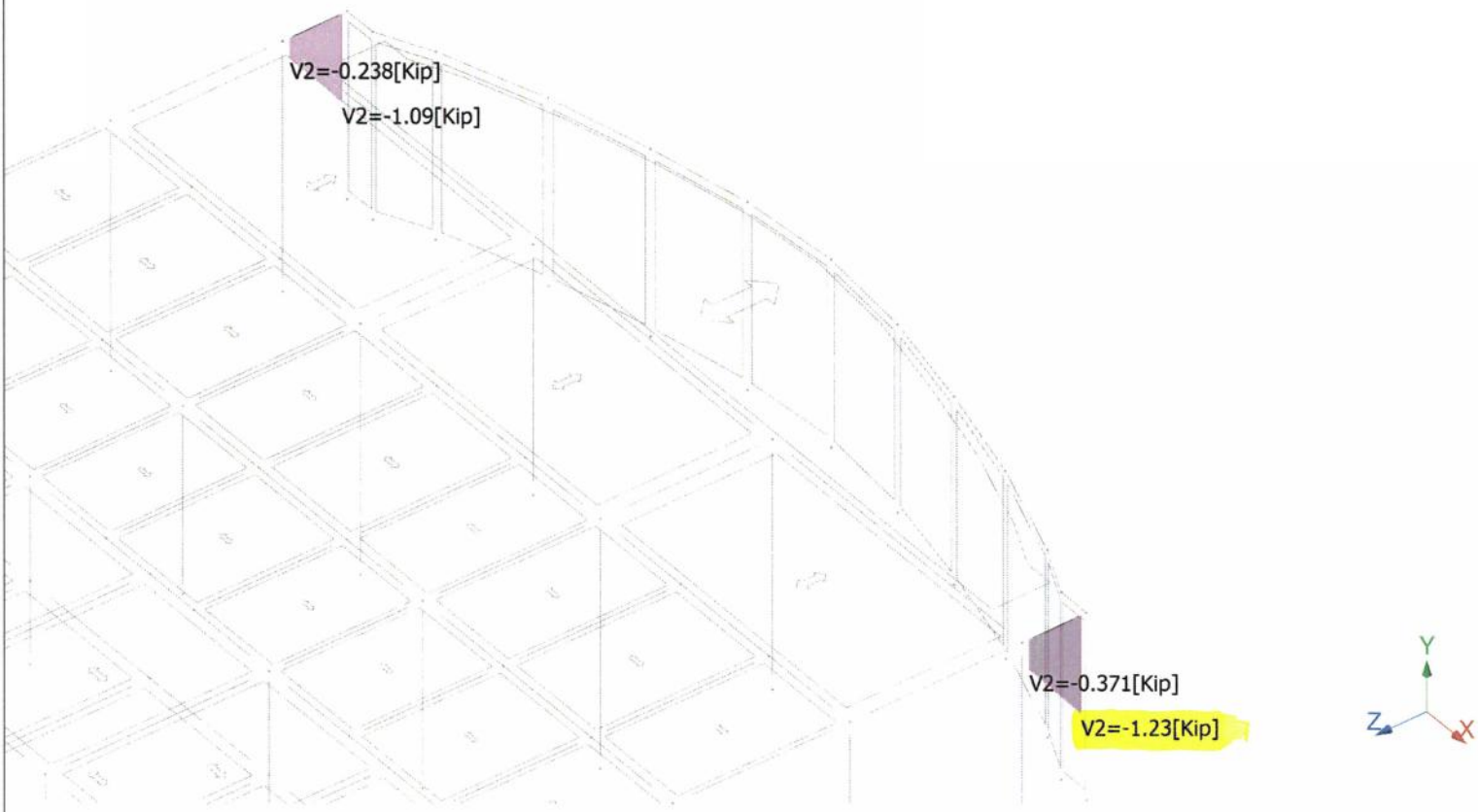

Bentley Microsoft

BEAM B27

Current Date: 11/9/2016 12:20 PM
Units system: English
File name: C:\Users\nleonard\Documents\JMT Projects\Carter Barron Amphitheater\Stage Frame Analysis.etz\
Load condition: D2=1.2DL+1.6LL

$\phi T_{th} = 2.65$ k·ft > TOR = 2.44 k·ft (SR = 0.92) ✓

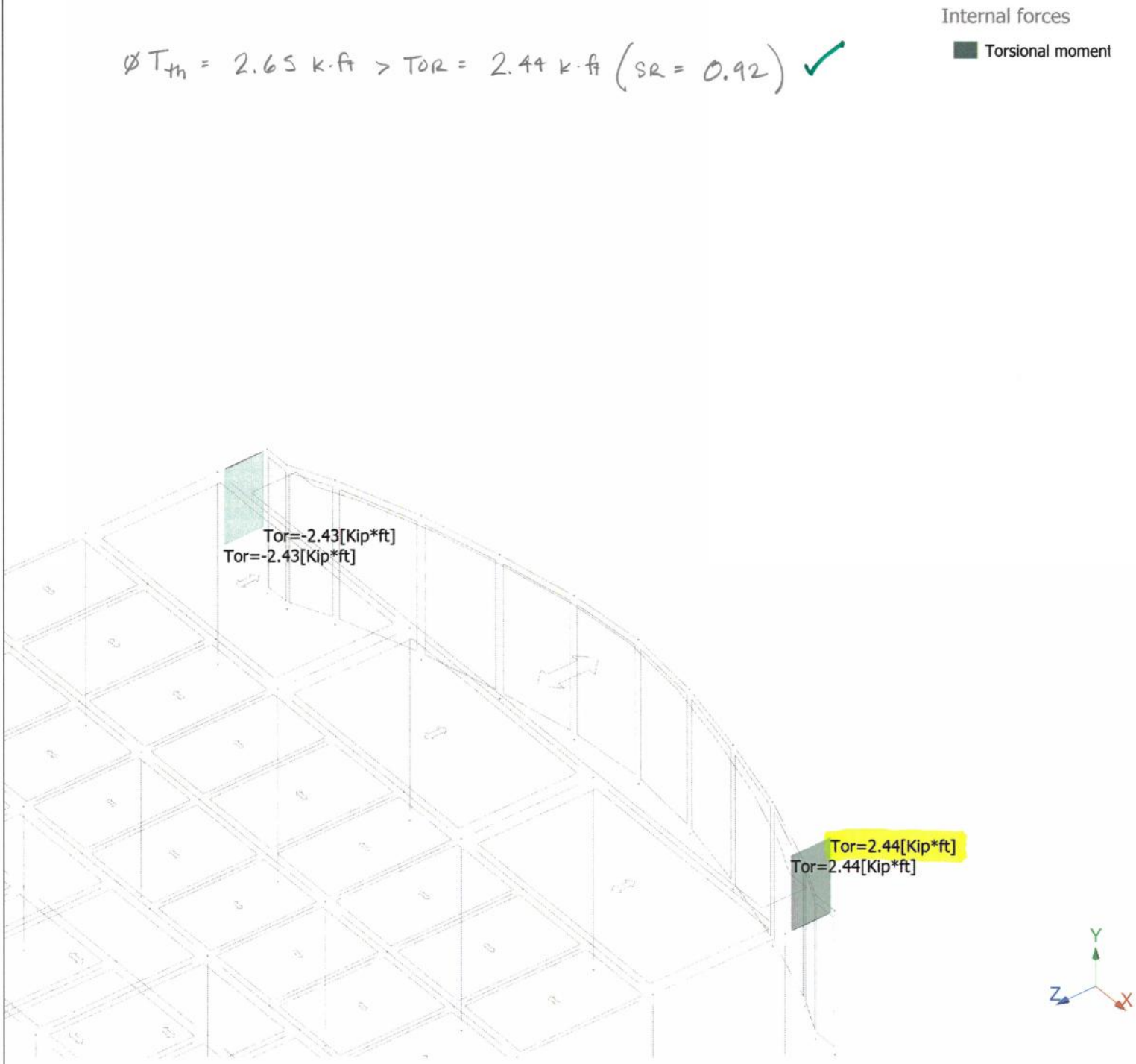

Engineering A Brighter Future

SAMPLE SHEAR CALCULATION PER ACI 318 – 1956 *(w/ comparison to a calculation per ACI 318 – 2014)*

Project CARTER BARRON AMPHITHEATER
Subject SHEAR CHECK FROM 1950s
Job No. 13-1429-010
Sheet No. 1 of 1
Computed By NLL Date 11/9/16 Checked By _____ Date _____

BEAM G3 – REGION W/O WEB REINF.

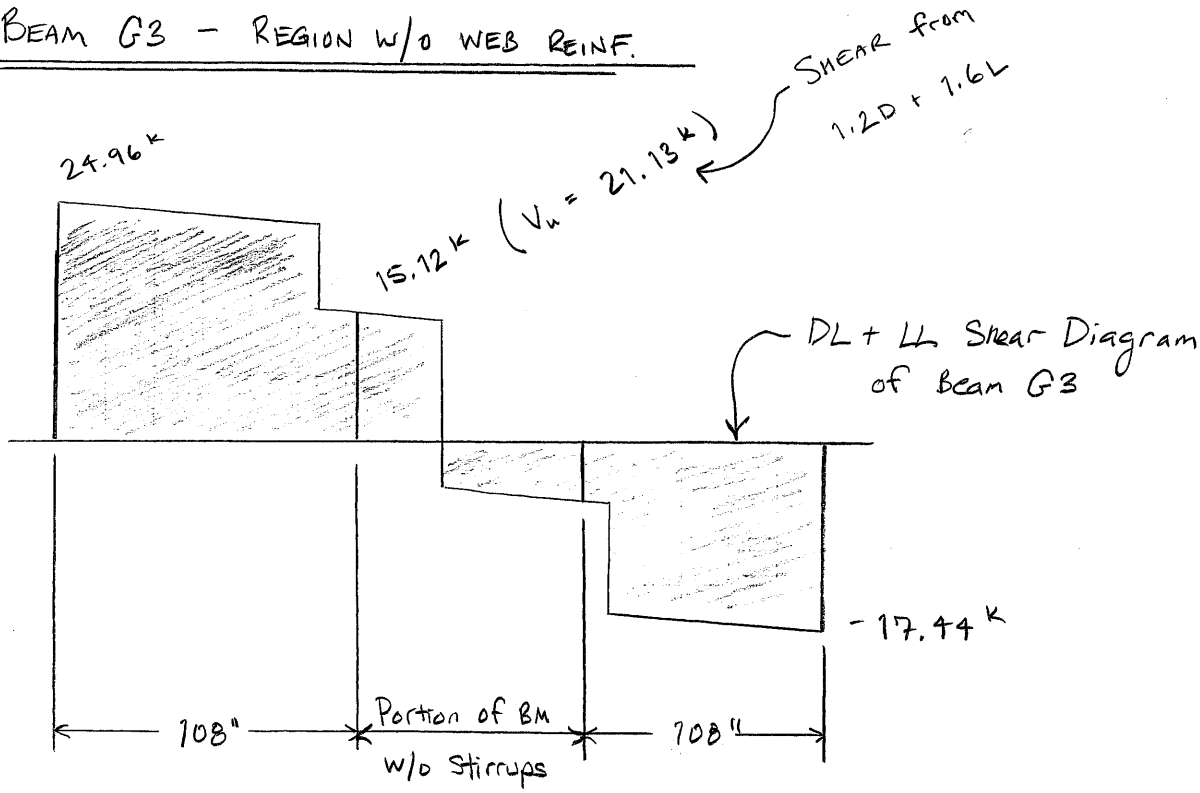

$$\sigma_v = \frac{V}{bjd} \le f_v = 0.03 f'_c = 0.03(2500) = 75 \text{ psi}$$

Per ACI 318-1956

- for $f'_c = 2500$ psi, $f_c = 0.45 f'_c = 1125$ psi, & $n = 12$

$j = 0.866$

$$\sigma_v = \frac{15120}{(12)(0.866)(21)} = 69.3 \text{ psi} < 75 \text{ psi} \quad (SR = 0.93) \checkmark$$

Per ACI 318-2014

$$\phi V_n = 0.75\left(\tfrac{1}{2}\right) 2\sqrt{2500}\,(12)(21) \div 1000 = 9.45 \text{ k}$$

$$V_u = 21.13^k > \phi V_n = 9.45^k \quad (SR = 2.24) \times$$

Project CARTER BARRON AMPHITHEATER

Subject A LOOK @ BEAM G1 STIRRUP SPACING

Job No. 13-1929-010

Sheet No. 1 of 1

Computed By NLL Date 11/11/16 Checked By _____ Date _____

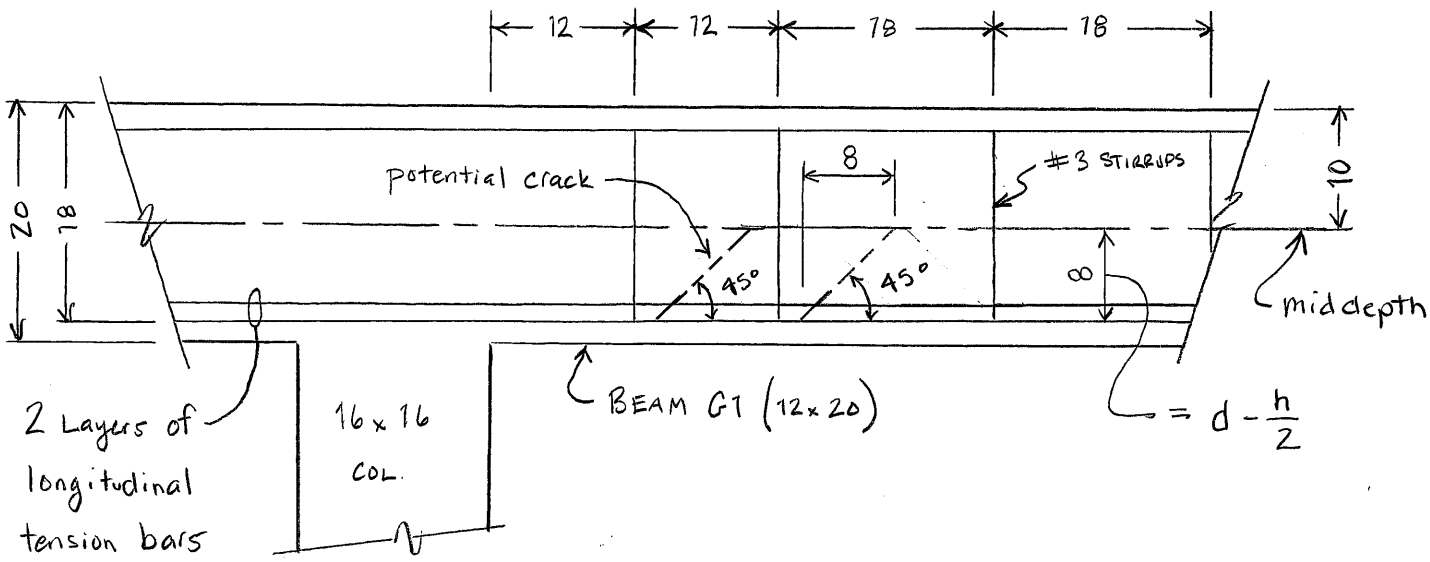

§ 806 – MAXIMUM SPACING OF WEB REINFORCEMENT (ACI 318-56)

"Where web reinforcement is required, it shall be so spaced that every 45-deg line (representing a potential crack) extending from the middepth of the beam to the longitudinal tension bars shall be crossed by one line of web reinforcement. If a shearing unit stress in excess of $0.06 f'_c$ is used, every such line shall be crossed by at least two such lines of reinforcement."

* Based on the diagram above, Beam G1 should have stirrup spacing $\leq$ 8" o.c per ACI 318-56.

Engineering A Brighter Future

HANDRAIL CALCULATIONS

Project CARTER BARRON AMPHITHEATER

Subject HANDRAIL CALCULATIONS

Job No. 13-1429-010

Sheet No. 1 of 2

Computed By NLL Date 11/9/16 Checked By _____ Date _____

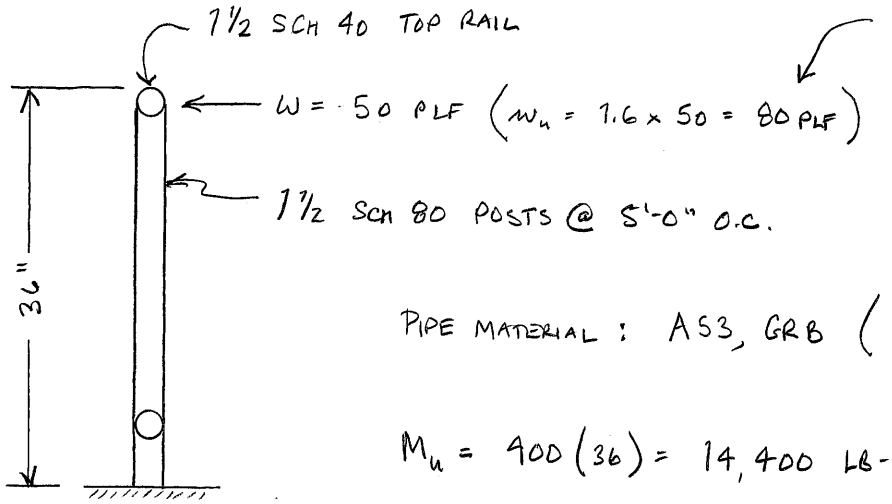

$\therefore P = 250$ LB

$P_u = 400$ LB

PIPE MATERIAL : A53, GRB (F_y = 35 ksi)

$M_u = 400(36) = 14{,}400$ LB-IN applied on post

$$D/t = 1.9/0.186 = 10.22 < \frac{0.07E}{F_y} = \frac{0.07(29000)}{35} = 58$$

$\therefore$ LIMIT STATE OF yielding (and no local buckling) only

$$M_n = M_p = F_y Z = 35000(0.549 \text{ IN}^3) = 19215 \text{ LB-IN}$$

$$\phi M_n = 0.9(19215) = 17{,}294 \text{ LB-IN} > M_u = 14{,}400 \text{ LB-IN} \checkmark$$

(SR = 0.83)

$$\Delta_P = \frac{PL^3}{3EI} = \frac{250(36)^3}{3(29E6)(0.372)} = 0.36"$$

$$\Delta_{LIMIT} = H/60 = 36/60 = 0.6"$$

Project CARTER BARRON AMPHITHEATER

Subject HANDRAIL CALCULATIONS

Job No. 13-1429-010

Sheet No. 2 of 2

Computed By NLL Date 11/9/16 Checked By _____ Date _____

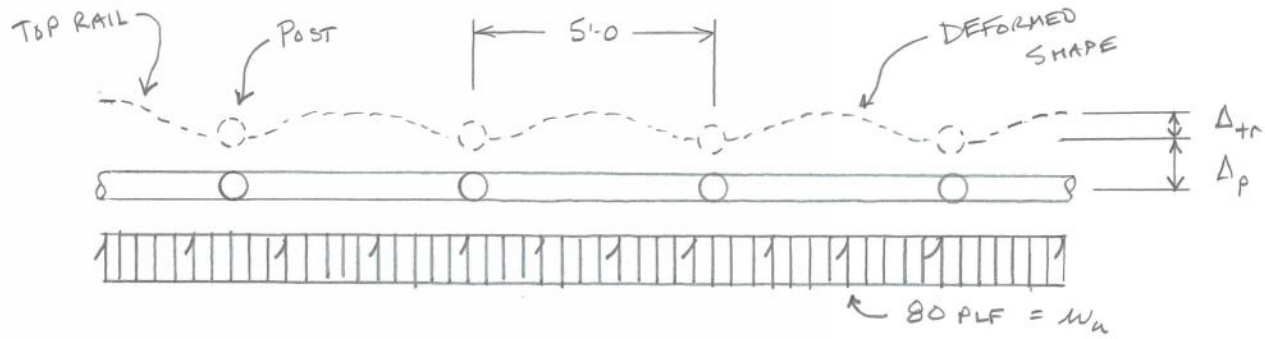

FOR AN INFINITELY LONG RAIL, MOMENT IN TOP RAIL WILL BE

$$M_u = \frac{80\,(5\text{ FT})^2}{12} \times 12 = 2000 \text{ LB-IN}$$

$$\phi M_n = 0.9\,(35000)(0.427 \text{ IN}^4) = 13\,262 \text{ LB-IN} \quad (SR = 0.15) \checkmark$$

$$\Delta_{tr} = \frac{wL^4}{384\,EI} = \frac{50\,(5)^4\,1728}{384\,(29E6)\,0.293} = 0.017''$$

$$\Sigma\Delta = \Delta_p + \Delta_{tr} = 0.36 + 0.017 \approx 0.38'' < \Delta_{LIMIT} = 0.60'' \checkmark$$

Engineering A Brighter Future

REFERENCES

USGS Design Maps Summary Report

User–Specified Input

Report Title	Carter Barron Amphetheatre - Seismic Parameters Fri October 14, 2016 18:20:30 UTC
Building Code Reference Document	ASCE 7-10 Standard (which utilizes USGS hazard data available in 2008)
Site Coordinates	38.95133°N, 77.03786°W
Site Soil Classification	Site Class D – "Stiff Soil"
Risk Category	I/II/III

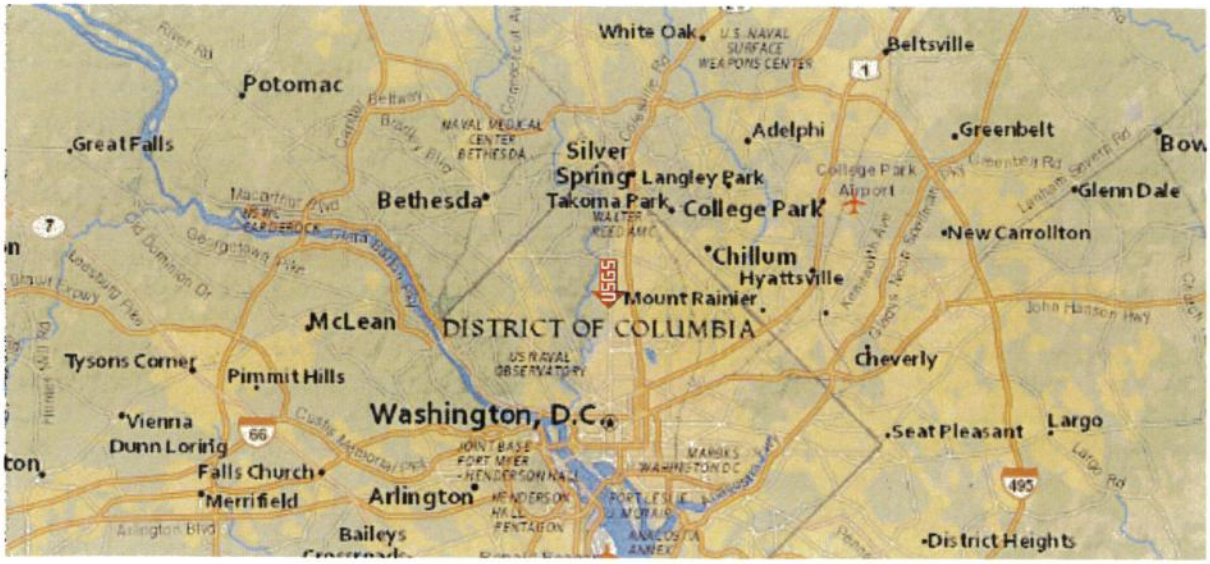

USGS–Provided Output

S_S =	0.119 g	S_{MS} =	0.190 g	S_{DS} =	0.127 g
S_1 =	0.051 g	S_{M1} =	0.122 g	S_{D1} =	0.082 g

For information on how the SS and S1 values above have been calculated from probabilistic (risk-targeted) and deterministic ground motions in the direction of maximum horizontal response, please return to the application and select the "2009 NEHRP" building code reference document.

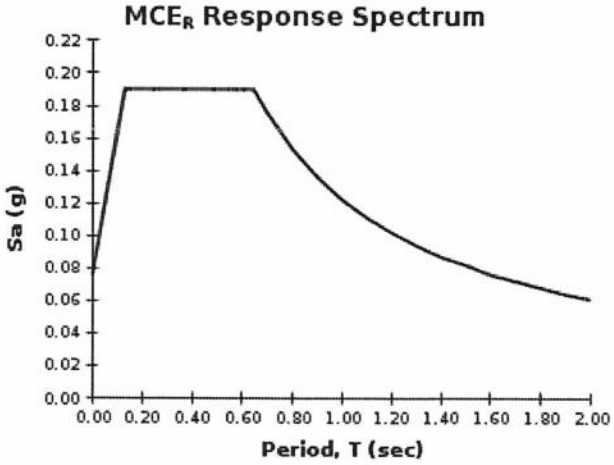

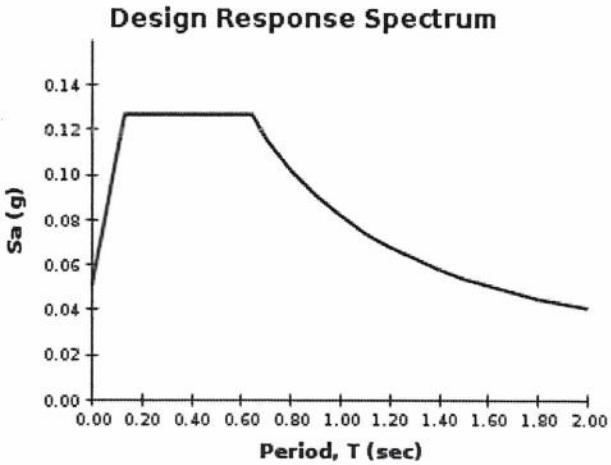

For PGA_M, T_L, C_{RS}, and C_{R1} values, please view the detailed report.

USGS Design Maps Detailed Report

ASCE 7-10 Standard (38.95133°N, 77.03786°W)

Site Class D – "Stiff Soil", Risk Category I/II/III

Section 11.4.1 — Mapped Acceleration Parameters

Note: Ground motion values provided below are for the direction of maximum horizontal spectral response acceleration. They have been converted from corresponding geometric mean ground motions computed by the USGS by applying factors of 1.1 (to obtain S_S) and 1.3 (to obtain S_1). Maps in the 2010 ASCE-7 Standard are provided for Site Class B. Adjustments for other Site Classes are made, as needed, in Section 11.4.3.

From Figure 22-1 [1] $S_S = 0.119$ g

From Figure 22-2 [2] $S_1 = 0.051$ g

Section 11.4.2 — Site Class

The authority having jurisdiction (not the USGS), site-specific geotechnical data, and/or the default has classified the site as Site Class D, based on the site soil properties in accordance with Chapter 20.

Table 20.3–1 Site Classification

Site Class	$\bar{v}_s$	$\bar{N}$ or $\bar{N}_{ch}$	$\bar{s}_u$
A. Hard Rock	>5,000 ft/s	N/A	N/A
B. Rock	2,500 to 5,000 ft/s	N/A	N/A
C. Very dense soil and soft rock	1,200 to 2,500 ft/s	>50	>2,000 psf
D. Stiff Soil	600 to 1,200 ft/s	15 to 50	1,000 to 2,000 psf
E. Soft clay soil	<600 ft/s	<15	<1,000 psf
	Any profile with more than 10 ft of soil having the characteristics: • Plasticity index $PI > 20$, • Moisture content $w \geq 40\%$, and • Undrained shear strength $\bar{s}_u < 500$ psf		
F. Soils requiring site response analysis in accordance with Section 21.1	See Section 20.3.1		

For SI: 1ft/s = 0.3048 m/s 1lb/ft² = 0.0479 kN/m²

Section 11.4.3 — Site Coefficients and Risk-Targeted Maximum Considered Earthquake (MCE_R) Spectral Response Acceleration Parameters

Table 11.4-1: Site Coefficient F_a

Site Class	Mapped MCE_R Spectral Response Acceleration Parameter at Short Period				
	$S_S \leq 0.25$	$S_S = 0.50$	$S_S = 0.75$	$S_S = 1.00$	$S_S \geq 1.25$
A	0.8	0.8	0.8	0.8	0.8
B	1.0	1.0	1.0	1.0	1.0
C	1.2	1.2	1.1	1.0	1.0
D	1.6	1.4	1.2	1.1	1.0
E	2.5	1.7	1.2	0.9	0.9
F	See Section 11.4.7 of ASCE 7				

Note: Use straight-line interpolation for intermediate values of S_S

For Site Class = D and S_S = 0.119 g, F_a = 1.600

Table 11.4-2: Site Coefficient F_v

Site Class	Mapped MCE_R Spectral Response Acceleration Parameter at 1-s Period				
	$S_1 \leq 0.10$	$S_1 = 0.20$	$S_1 = 0.30$	$S_1 = 0.40$	$S_1 \geq 0.50$
A	0.8	0.8	0.8	0.8	0.8
B	1.0	1.0	1.0	1.0	1.0
C	1.7	1.6	1.5	1.4	1.3
D	2.4	2.0	1.8	1.6	1.5
E	3.5	3.2	2.8	2.4	2.4
F	See Section 11.4.7 of ASCE 7				

Note: Use straight-line interpolation for intermediate values of S_1

For Site Class = D and S_1 = 0.051 g, F_v = 2.400

Equation (11.4–1): $S_{MS} = F_a S_S = 1.600 \times 0.119 = 0.190$ g

Equation (11.4–2): $S_{M1} = F_v S_1 = 2.400 \times 0.051 = 0.122$ g

Section 11.4.4 — Design Spectral Acceleration Parameters

Equation (11.4–3): $S_{DS} = ⅔\ S_{MS} = ⅔ \times 0.190 = 0.127$ g

Equation (11.4–4): $S_{D1} = ⅔\ S_{M1} = ⅔ \times 0.122 = 0.082$ g

Section 11.4.5 — Design Response Spectrum

From Figure 22-12 [3] $T_L = 8$ seconds

Figure 11.4–1: Design Response Spectrum

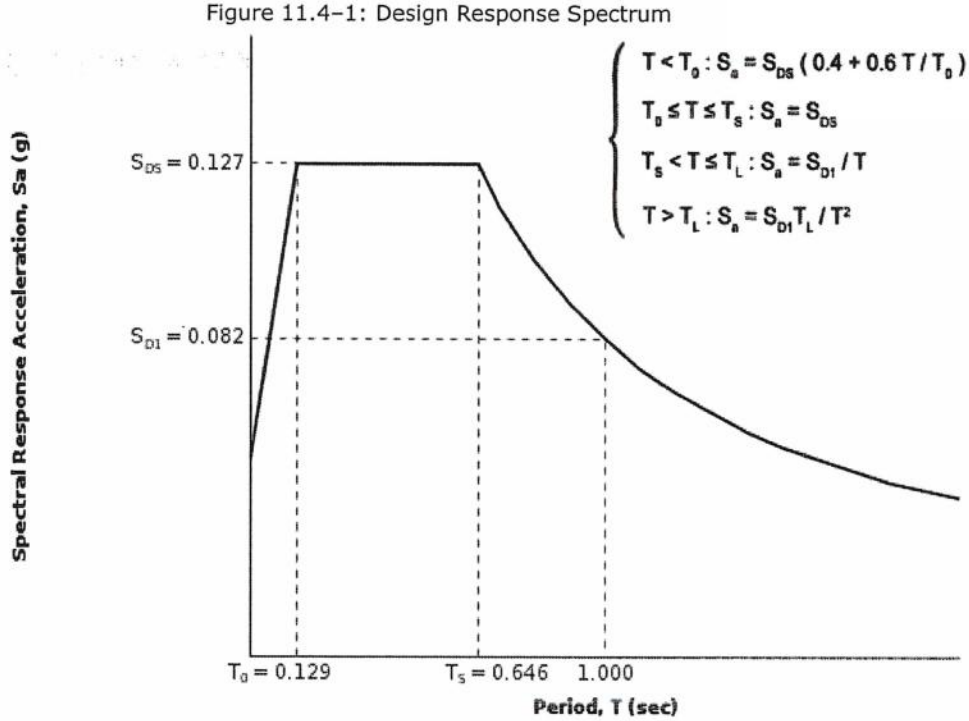

Section 11.4.6 — Risk-Targeted Maximum Considered Earthquake (MCE_R) Response Spectrum

The MCE_R Response Spectrum is determined by multiplying the design response spectrum above by 1.5.

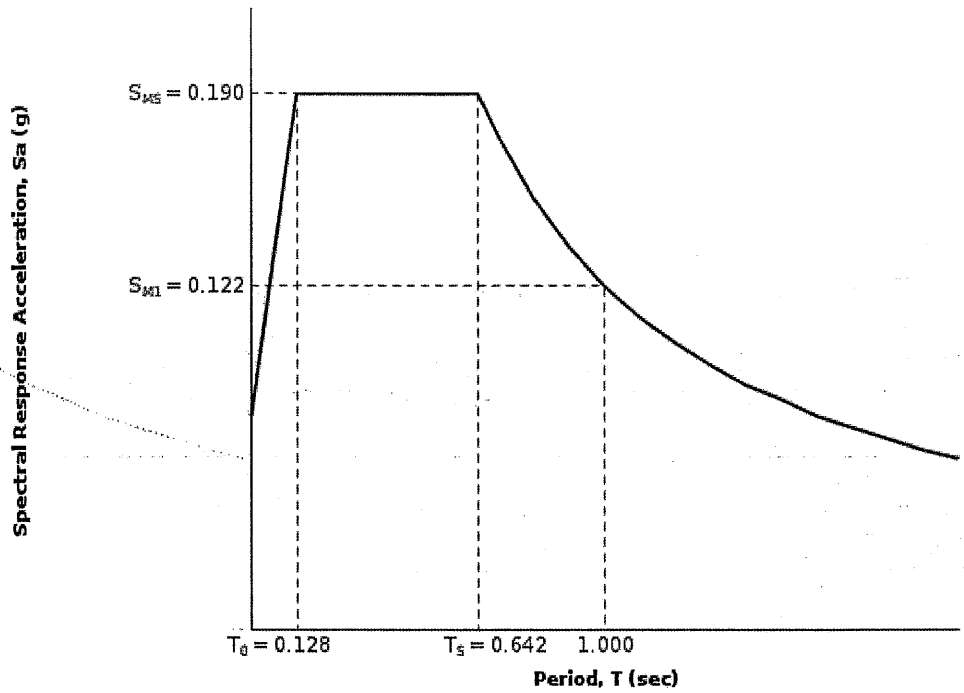

Section 11.8.3 — Additional Geotechnical Investigation Report Requirements for Seismic Design Categories D through F

From Figure 22-7 [4] PGA = 0.056

Equation (11.8–1): $PGA_M = F_{PGA}PGA = 1.600 \times 0.056 = 0.09$ g

Table 11.8–1: Site Coefficient F_{PGA}

Site Class	Mapped MCE Geometric Mean Peak Ground Acceleration, PGA				
	PGA ≤ 0.10	PGA = 0.20	PGA = 0.30	PGA = 0.40	PGA ≥ 0.50
A	0.8	0.8	0.8	0.8	0.8
B	1.0	1.0	1.0	1.0	1.0
C	1.2	1.2	1.1	1.0	1.0
D	1.6	1.4	1.2	1.1	1.0
E	2.5	1.7	1.2	0.9	0.9
F	See Section 11.4.7 of ASCE 7				

Note: Use straight–line interpolation for intermediate values of PGA

For Site Class = D and PGA = 0.056 g, F_{PGA} = 1.600

Section 21.2.1.1 — Method 1 (from Chapter 21 – Site-Specific Ground Motion Procedures for Seismic Design)

From Figure 22-17 [5] C_{RS} = 0.893

From Figure 22-18 [6] C_{R1} = 0.900

Section 11.6 — Seismic Design Category

Table 11.6-1 Seismic Design Category Based on Short Period Response Acceleration Parameter

VALUE OF S_{DS}	RISK CATEGORY		
	I or II	III	IV
$S_{DS} < 0.167g$	A	A	A
$0.167g \leq S_{DS} < 0.33g$	B	B	C
$0.33g \leq S_{DS} < 0.50g$	C	C	D
$0.50g \leq S_{DS}$	D	D	D

For Risk Category = I and S_{DS} = 0.127 g, Seismic Design Category = A

Table 11.6-2 Seismic Design Category Based on 1-S Period Response Acceleration Parameter

VALUE OF S_{D1}	RISK CATEGORY		
	I or II	III	IV
$S_{D1} < 0.067g$	A	A	A
$0.067g \leq S_{D1} < 0.133g$	B	B	C
$0.133g \leq S_{D1} < 0.20g$	C	C	D
$0.20g \leq S_{D1}$	D	D	D

For Risk Category = I and S_{D1} = 0.082 g, Seismic Design Category = B

Note: When S_1 is greater than or equal to 0.75g, the Seismic Design Category is **E** for buildings in Risk Categories I, II, and III, and **F** for those in Risk Category IV, irrespective of the above.

Seismic Design Category ≡ "the more severe design category in accordance with Table 11.6-1 or 11.6-2" = B

Note: See Section 11.6 for alternative approaches to calculating Seismic Design Category.

References

1. *Figure 22-1*: http://earthquake.usgs.gov/hazards/designmaps/downloads/pdfs/2010_ASCE-7_Figure_22-1.pdf
2. *Figure 22-2*: http://earthquake.usgs.gov/hazards/designmaps/downloads/pdfs/2010_ASCE-7_Figure_22-2.pdf
3. *Figure 22-12*: http://earthquake.usgs.gov/hazards/designmaps/downloads/pdfs/2010_ASCE-7_Figure_22-12.pdf
4. *Figure 22-7*: http://earthquake.usgs.gov/hazards/designmaps/downloads/pdfs/2010_ASCE-7_Figure_22-7.pdf
5. *Figure 22-17*: http://earthquake.usgs.gov/hazards/designmaps/downloads/pdfs/2010_ASCE-7_Figure_22-17.pdf
6. *Figure 22-18*: http://earthquake.usgs.gov/hazards/designmaps/downloads/pdfs/2010_ASCE-7_Figure_22-18.pdf

SNOW LOADS BY LOCATION

Applied Technology Council

Search Result

Elevation Limitation: ASCE 7* Ground Snow Load
Query Date: November 08, 2016
Latitude: 38.951334
Longitude: -77.037856
Elevation: 239.9 Feet

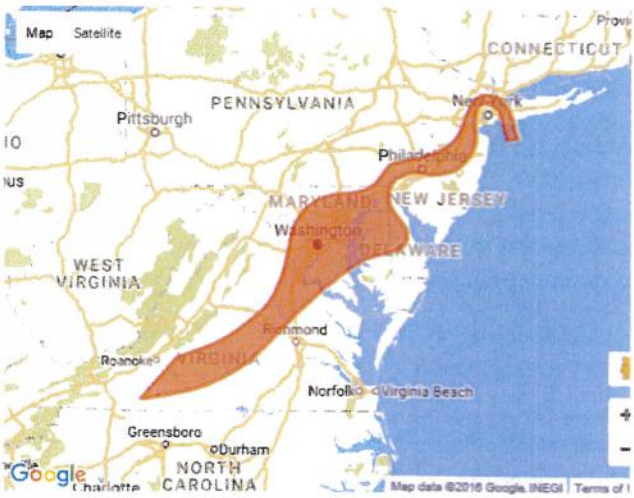

Any elevation: Ground Snow Load is 25 psf

All loading data is in pounds per square foot.

For a site-specific case study area, a case study is required to establish ground snow loads.

*Based on Figure 7-1 Ground Snow Loads printed in ASCE 7-95 through ASCE 7-10.

Users should consult with local building officials to determine if there are community-specific snow load requirements that govern.

Red shaded area is the load specific boundaries.
Any darker red area is the overlapping load specific boundary.

GROUND SNOW LOAD WEBSITE DISCLAIMER

While the information presented on this website is believed to be correct, ATC and its sponsors and contributors assume no responsibility or liability for its accuracy. The material presented in the ground snow load report should not be used or relied upon for any specific application without competent examination and verification of its accuracy, suitability and applicability by engineers or other licensed professionals. ATC does not intend that the use of this information replace the sound judgment of such competent professionals, having experience and knowledge in the field of practice, nor to substitute for the standard of care required of such professionals in interpreting and applying the results of the ground snow load report provided by this website. Users of the information from this website assume all liability arising from such use. Use of the output of this website does not imply approval by the governing building code bodies responsible for building code approval and interpretation for the building site described by latitude/longitude location in the ground snow load report.

Sponsored by the ATC Endowment Fund • Applied Technology Council • 201 Redwood Shores Parkway, Suite 240 • Redwood City, California 94065 • (650) 595-1542

Table 3.1—Reinforcing bar specifications and properties: 1911 to present (CRSI 2001)

ASTM specification	Years		Steel type	Grade 33 (structural)		Grade 40 (intermediate)		Grade 50 (hard)		Grade 60		Grade 75	
	Start	End		Minimum yield, psi*	Maximum yield, psi	Minimum yield, psi	Maximum yield, psi	Minimum yield, psi	Maximum yield, psi	Minimum yield, psi	Maximum yield, psi	Minimum yield, psi	Maximum yield, psi
A 15	1911	1966	Billet	33,000	55,000	40,000	70,000	50,000	80,000	—	—	—	—
A 408	1957	1966	Billet	33,000	55,000	40,000	70,000	50,000	80,000	—	—	—	—
A 432	1959	1966	Billet	—	—	—	—	—	—	60,000	90,000	—	—
A 431	1959	1966	Billet	—	—	—	—	—	—	—	—	75,000	100,000
A 615	1968	1972	Billet	—	—	40,000	70,000	—	—	60,000	90,000	75,000	100,000
A 615	1974	1986	Billet	—	—	40,000	70,000	—	—	60,000	90,000	—	—
A 615	1987	Present	Billet	—	—	40,000	70,000	—	—	60,000	90,000	75,000	100,000
A 16	1913	1966	Rail	—	—	—	—	50,000	80,000	—	—	—	—
A 61	1963	1966	Rail	—	—	—	—	—	—	60,000	90,000	—	—
A 616	1968	1999	Rail	—	—	—	—	50,000	80,000	60,000	90,000	—	—
A 160	1936	1964	Axle	33,000	55,000	40,000	70,000	50,000	80,000	—	—	—	—
A 160	1965	1966	Axle	33,000	55,000	40,000	70,000	50,000	80,000	60,000	90,000	—	—
A 617	1968	1999	Axle	—	—	40,000	70,000	—	—	60,000	90,000	—	—
A 996	2000	Present	Rail, axle	—	—	40,000	70,000	50,000	80,000	60,000	90,000	—	—
A 706	1974	Present	Low-alloy	—	—	—	—	—	—	60,000	80,000	—	—
A 955M	1996	Present	Stainless	—	—	40,000	70,000	—	—	60,000	90,000	75,000	100,000

*1000 psi = 6.895 MPa.

compressive strength based on these indirect tests. See ACI 228.1R and Section 2.2.3 for further information.

3.2—Reinforcing steel

3.2.1 *Determination of yield strength*—The yield strength of the reinforcing steel can be established by two methods. Information from mill test reports furnished by the manufacturer of the reinforcing steel can be used if the engineer and the building official are in agreement. Yield strengths from mill test reports, however, tend to be greater than those obtained from tests of field samples. When mill test reports are not available nor desirable, sampling and destructive testing of specimens taken from the structure will be required. Guidelines for this method are given in Section 3.2.3.

The Concrete Reinforcing Steel Institute (CRSI) provides information on reinforcing systems in older structures (CRSI 1981). Information on reinforcing bar specifications, yield strengths, sizes, and allowable stresses is also provided by CRSI (2001). Table 3.1, adapted from the CRSI document, summarizes ASTM specifications and corresponding ranges of yield strength for bars manufactured from 1911 to present.

3.2.2 *Sampling techniques*—When the yield strength of embedded reinforcing steel is determined by testing, the recommendations listed below should be followed:

- Tension test specimens shall be the full section of the bar (ASTM A 370—Annex 9). Requirements for specimen length, preparation, testing, and determination of the yield strength are provided by ASTM A 370.
- In the event that bar samples meeting the length requirements of ASTM A 370 (Annex 9) cannot be obtained, samples may be prepared (machined) according to the general requirements of ASTM A 370 for testing and determination of mechanical properties.
- Samples should be removed at locations of minimum stress in the reinforcement.
- To avoid excessive reduction in member strength, no two samples should be removed from the same cross section (location) of a structural member.
- Locations of samples in continuous concrete construction should be separated by at least the development length of the reinforcement to avoid excessive weakening of the member.
- For single structural elements having a span of less than 25 ft (7.5 m) or a loaded area of less than 625 ft^2 (60 m^2), at least one sample should be taken from the main longitudinal reinforcement (not stirrups or ties).
- For longer spans or larger loaded areas, more samples should be taken from locations well distributed through the portion being investigated to determine whether the same strength of steel was used throughout the structure.
- Sampling of prestressed reinforcement, whether from bonded or unbonded systems, is a complex undertaking and beyond the scope of this report. Some discussion of extraction of unbonded single-strand tendons for testing can be found in ACI 423.4R.

3.2.3 *Additional considerations*—The strength evaluation of concrete structures can require consideration of several reinforcement-related factors in addition to the yield strength of the reinforcement, such as development length, anchorage, and reduction in cross section or bond due to corrosion.

Reinforcing bars manufactured before 1947 are sometimes smooth or have deformation patterns not meeting modern requirements and, as a result, the bond and development of these bars could be significantly different from those of modern reinforcement CRSI (2001). Similarly, changes to details and assumptions for standard hooks can affect the development of hooked bars in older structures. For structures with reinforcing bars manufactured before 1947, CRSI (2001) conservatively recommends assuming that the required development length is twice that based on current

American Concrete Institute Copyrighted Material—www.concrete.org

APPENDIX F

TEST REPORTS

ECS Mid-Atlantic, LLC
14026 Thunderbolt Place, Suite 100
Chantilly, VA 20151-3232
(703) 471-8400 [Phone]
(703) 834-5527 [Fax]

LETTER OF TRANSMITTAL

October 6, 2016

Johnson, Mirmiran & Thompson, Inc.
72 Loveton Circle
Sparks, MD 21152-0949

ATTN: Mr James Boisseau

RE: **Carter Barron Amphitheater - IDIQ Contract P14PC00241**

ECS Job # **46:2391**

Permits:
Location: **Rock Creek Park (ROCR)**
Washington, DC

We are enclosing:

X Materials Engineering Division Reports
X For your use
X As requested

ENCL:

Field Report # 3	10/06/2016	Results of comp. str

DISTRICT OF COLUMBIA
Michael J. Sladki
PE907605
CIVIL
PROFESSIONAL ENGINEER

OCT 6 2016

Michael J. Sladki
Facilities Principal Engineer

Alexis Herr
Senior Project Engineer

This report (and any included attachments) shall not be reproduced, except in full, without the prior written approval of ECS.

ECS Mid-Atlantic, LLC
14026 Thunderbolt Place, Suite 100
Chantilly, VA 20151-3232
(703) 471-8400 [Phone]
(703) 834-5527 [Fax]

FIELD REPORT

Project No.	46:2391
Report No.	3
Day & Date	Thursday 10/06/2016
Weather	
On-Site Time	0.00
Lab Time	0.25
Travel Time*	0.00
Total	0.25
Re Obs.Time	0.00

Project	Carter Barron Amphitheater - IDIQ Contract
Location	Washington, DC
Client	Johnson, Mirmiran & Thompson, Inc. - James Boisseau

Remarks: Results of comp. str

Trip Charges* Tolls/Parking* Mileage*

Chargeable Items

Time of	Arrival	Departure
	04:00P	04:00P

* Travel time and mileage will be billed in accordance with the contract.

Summary of Services Performed (field test data, locations, elevations & depths are estimates) & Individuals Contacted.

Please find attached the results of compressive strength testing for the above referenced project.

One set of 3-cores was obtained, by core drilling, per ASTM C42, on September 28, 2016. The cores were taken from the underside of the stage slab at locations provided by the SER.

Cores were returned to the ECS laboratory for compressive strength testing in accordance with ASTM C39. Results of the testing are attached to this report.

By **SUBCONTRACTOR** 1200

COMPRESSIVE STRENGTH TEST REPORT FOR DRILLED CORES (ASTM C42-13)

ECS PROJECT NO.: 46: 2391
ECS PROJECT NAME: Carter Barron Amphitheater
REPORT DATE: October 6, 2016

CORE LOCATION	SET I.D.	CORE I.D.	CORE DIAMETER DIA. #1 (in)	CORE DIAMETER DIA. #2. (in)	CORE DIAMETER AVG. DIA. (in)	CROSS-SECTIONAL AREA (sq-in)	CORE LENGTH (as received) (in)	CORE LENGTH (before capping) (in)	CORE LENGTH (after capping) (in)	MASS (before capping) (lbs)	CALC. DENSITY (pcf)	l/d RATIO	CORRECTION FACTOR	LOAD (lbf)	UNCORRECTED STRENGTH (psi)	CORRECTED STRENGTH (psi)	AVERAGE STRENGTH (psi)
Set 1	1	1	3.67	3.67	3.67	10.58	5.60	5.54	5.79	4.80	142	1.58	0.97	49940	4720	4560	4500
		2	3.67	3.67	3.67	10.58	5.77	5.69	5.94	5.00	144	1.62	0.97	54240	5130	4970	
		3	3.67	3.67	3.67	10.58	5.34	5.27	5.51	4.65	144	1.50	0.96	43950	4150	3980	

SUPPLEMENTARY INFORMATION:

Date of Concrete Placement:
Date of Field Coring: 9/28/2016
Date of Cores delivered to the lab: 9/28/2016
Date of Core Preparation (Ends/Capping): 9/29/2016
Date of Core Testing: 10/5/2016
Age of Concrete at Time of Coring Testing:
No. of Days Core Conditioned: 5
Avg. Strength and Age of standard Cylinders:
Design Strength of Concrete:

Core Drill Barrel diameter (outside): 4.0"
Testing Machine I.D. 8264
Deviations from ASTM C42 Test Requirements:
Nominal Size of Coarse Aggregate:
Apparent defects/flaws in Cores (Yes/No): No
Loading direction vs. placement direction:
Technician Name obtained cores: M. Mihranian & D. Dunfer
Technician Name prepared/tested cores: Miah Uzun
Technician Name tested cores: Nader A.

AMERICAN ENGINEERING TESTING, INC.

CONSULTANTS
- ENVIRONMENTAL
- GEOTECHNICAL
- MATERIALS
- FORENSICS

REPORT OF CONCRETE ANALYSIS

PROJECT:

CARTER BARRON AMPHITHEATER
ECS PROJECT NO. 46:2391

REPORTED TO:

ENGINEERING CONSULTING SERVICES
MID-ATLANTIC, LLC
14026 THUNDERBOLT PLACE, STE 100
CHANTILLY, VA 20151-3232

ATTN: ALEXIS HERR

AET PROJECT NO: 24-01883

DATE: OCTOBER 31, 2016

INTRODUCTION

This report presents the results of laboratory work performed by our firm on two concrete core samples, labeled P-1 and P-2, submitted by Ms. Alexis Herr of Engineering Consulting Services Mid-Atlantic, LLC., on October 4, 2016. We understand the cores were procured from the Carter Barron Amphitheater in Washington, DC which was constructed in the mid 1970's and is currently under investigation. The scope of our work was limited to performing petrographic evaluation upon the two cores to determine the condition and quality of the concrete.

CONCLUSIONS

Based on our observations and testing, we believe:

1. Both concretes were in good condition, but were of poor quality for exterior concrete due to the lack of an adequate air void system to offer resistance to cyclic freezing and thawing while in a saturated condition. No evidence of freeze-thaw related damage was observed in either concrete, an indication that the concretes were not (or were rarely) in a saturated condition when experiencing cycles of freezing and thawing. The American Concrete Institute (ACI) recommends an average air content of 5 to 6% (± 1.5%) for exterior concrete with 1" nominal sized aggregate in moderate to severe service conditions (from ACI 201.2R-08). The sample P-1 contained a total air void content of 1.8% and sample P-2 contained a total air content of 2.0%.

2. The coating system on the top surface of each concrete has protected the top surface concrete from exposure atmospheric carbon dioxide. When exposed to carbon dioxide and moisture, concrete undergoes a reaction known as 'carbonation' which lowers the pH of the concrete from the range of 12 to 13 of fresh concrete to near neutral. Very little carbonation was observed at the top surface of each sample; up to 3 mm (1/8") from the top surface of P -1 and up to 1 mm (1/32") from the top surface of P-2. Carbonation at the unprotected bottom surface of the cores proceeded up to 27 mm (1-1/16") and 32 mm (1-1/4") depth in cores P-1 and P-2, respectively. Carbonation depths documented were not deeper than would be expected of concrete of this age.

This document shall not be reproduced, except in full, without written approval from American Engineering Testing, Inc.

3. The coarse and fine aggregate in both samples was similar and generally appeared to be hard, sound and durable. The coarse aggregate was comprised of a natural siliceous gravel made up of quartzite and chert. The sand was comprised of a natural quartz, feldspar, and lithic sand. Each concrete was placed at a moderate water-to-cement ratio (w/cm) estimated to be between 0.45 and 0.50.

4. The concretes were coated by a translucent epoxy-like primer and an aged, gray, more resilient, and sanded polymer. The coating peeled from the perimeters of the cores during coring. The surfaces of the concrete were mortar-eroded/abraded or had been prepped prior to the application of the coating. Abundant, fine, sub-horizontal microcracking, 'micro-bruising', occurring just below the top surface of each sample was likely induced by abrasion/surface prep of the concretes. The concrete surfaces exhibited an estimated CSP (concrete surface profile) of 3.

SAMPLE IDENTIFICATION

Sample ID:	P-1	P-2
Sample Type:	95 mm (3-3/4") Diameter, Hardened Concrete Cores	
Sample Length:	143 mm (5-5/8")	146 mm (5-3/4")

TEST RESULTS

Our complete petrographic analysis documentation appears on the attached sheets entitled 24-LAB-001 "Petrographic Examination of Hardened Concrete, ASTM C856." A brief summary of the general physical characteristics of the concrete is as follows:

1. The coarse aggregate in each sample was similar and was comprised of 25 mm (1") nominal sized siliceous gravel made up of quartzite and chert. The coarse aggregate appeared well graded and exhibited good (P-2) to fair (P-1) overall distribution. The fine aggregate in both samples was a natural quartz, feldspar and lithic sand.

2. The overall paste color of both cores was similar to medium gray (Munsell® N5). The paste hardness of each sample was judged to be moderate overall with the paste/aggregate bond was considered to be fair (P-1) to poor (P-2).

3. The top surface condition of both samples was fairly rough and abraded. Carbonation proceeded up to 3 mm (1/8") maximum depth from the top surfaces and up to 32 mm (1-1/4") maximum depth from the bottom surfaces.

4. The w/cm was estimated to be between 0.40 and 0.45 with approximately 4 to 6% residual portland cement clinker particles.

Air Content Testing

Sample ID		
voids > 1mm (0.040")	0.4	0.6

TEST PROCEDURES

Laboratory testing was performed on October 5, 2016 and subsequent dates. Our procedures were as follows:

Petrographic Analysis

Petrographic analysis was performed in accordance with AET Standard Operating Procedure 24-LAB-001, "Petrographic Examination of Hardened Concrete," ASTM C856-latest revision. Each petrographic analysis consisted of reviewing the cement paste and aggregate qualities on a whole basis on sawcut and lapped, and fractured sections. Reflected light microscopy was performed under an Olympus SZX-12 binocular stereozoom microscope at magnifications up to 160x. The depth of carbonation was documented using a phenolphthalein pH indicator solution applied on freshly sawcut and lapped surfaces of the concrete sample. The paste-coarse aggregate bond quality was determined by fracturing a sound section of the concrete in the laboratory with a rock hammer.

The water/cementitious of the concretes were estimated by viewing a thin section of the concrete under a Nikon E600 polarizing light microscope at magnifications of up to 1000x. Thin section analysis was performed in accordance with Standard Operating Procedure 24-LAB-009, "Determining the Water/Cement of Portland Cement Concrete, AET Method." An additional, smaller, sawcut subdivision of each concrete sample was epoxy impregnated, highly polished, and then attached to a glass slide using an optically clear epoxy. Excess sample was sawcut from the glass and the thin slice remaining on the slide was lapped and polished until the concrete reaches 25 microns or less in thickness. Thin section analysis allows for the observation of portland cement morphology, including: phase identification, an estimate of the amount of residual material, and spatial relationships. Also, the presence and relative amounts of supplementary cementitious materials and pozzolans may be identified and estimated.

Air Content Testing

Air content testing was performed using Standard Operating Procedure 24-LAB-003, "Microscopical Determination of Air Void Content and Parameters of the Air Void System in Hardened Concrete, ASTM C457-latest revision." The linear traverse method was used. The concrete core was saw cut perpendicular with respect to the horizontal plane of the concrete as placed and then lapped prior to testing.

REMARKS

The test samples will be retained for a period of at least sixty days from the date of this report. Unless further instructions are received by that time, the samples may be discarded. Test results relate only to the items tested. No warranty, express or implied, is made.

Report Prepared By:
American Engineering Testing, Inc.

Christine A. Tillema
Senior Petrographer
Phone: 651-659-1353
ctillema@amengtest.com

Report Reviewed By:
American Engineering Testing, Inc.

Gerard Moulzolf, PG
Vice President/Principal Petrographer
MN License #30023
Phone: 651-659-1346
gmoulzolf@amengtest.com

24-LAB-001 Petrographic Examination of Hardened Concrete
ASTM C856

Project No.	24-01883	Date:	10-11-2016	Date reviewed:	10-26-2016
Sample ID:	P-1	Performed by:	S. Massignan	Reviewed by:	C. Tillema

I. General Observations

1. Sample Dimensions: Our analysis was performed on the 142 mm (5-9/16") thick concrete portion of two 143 mm (5-5/8") x 93 mm (3-11/16") x 45 mm (1-3/4") thick lapped profile sections and a 76 mm (3") x 52 mm (2") thin section that were sawcut and prepared from the original 95 mm (3-3/4") diameter x 143 mm (5-5/8") long core.

2. Surface Conditions:
   Top: Fairly rough, mortar eroded/abraded surface. Overlain by a coating.
   Bottom: Fairly smooth, planar, formed surface; placed in formwork.

3. Reinforcement: None observed.

4. General Physical Conditions: The concrete was overlain by an approximately 1 mm (1/32") thick coating system consisting of a thin layer of translucent yellow epoxy-like primer overlain by a medium light gray more resilient polymer material with fine sand broadcast into the top surface. Several of the fine sand particles were observed to have been "plucked out," leaving an impression in the coating. The coating was poorly to fairly bonded to the concrete. Approximately 20% of the coating was missing upon sample receipt, possibly from sample procurement. Approximately 20% of the remaining coating had peeled away or de-bonded from the concrete, along the cored perimeter of the sample. The surface of the concrete appears to have been abraded/prepped prior to the application of the coating; with abundant fine aggregate particles exposed at the top surface. We estimate the CSP (concrete surface profile) to be 3. Fine sub-horizontal microcracking, or "micro-bruising" produced by the abrasion, was observed within the top 0.5 mm of the concrete. A few sub-vertical microcracks proceeded from the top surface of the concrete up to 9 mm (3/8") depth. The microcracks proceeded primarily around aggregate particles. Several sub-vertical microcracks were observed proceeding from the bottom surface up to 5 mm (3/16") depth. The top at least 0.5 mm up to 3 mm (1/8") of the paste was darker than the paste in the body of the concrete, apparently due to a component of the coating or a related adhesive penetrating into the concrete paste. The depth of carbonation ranged from 1 mm (1/32") up to 2 mm (1/16") depth from the top surface of the concrete, and "spiked" up to 3 mm (1/8") along sub-vertical microcracking. Carbonation generally followed the darker paste but occasionally proceeded deeper. Carbonation ranged from 9 mm (3/8") up to 27 mm (1-1/16") depth from the bottom surface. Several entrained- and entrapped-sized air voids were observed on the formed bottom surface. White, acicular ettringite was observed lining many air voids and filling several of the smallest air voids throughout the non-carbonated paste. The concrete was air-entrained, with a total air content of 1.8% and entrained air content of 1.4%. The concrete exhibited a spacing factor of 0.019" and specific surface of 430 in^2/in^3. The air void system was not consistent with current American Concrete Institute (ACI) recommendations for freeze-thaw resistance. Darker, denser areas of paste with fewer air voids were observed in the recessed notches of a few coarse aggregate particles.

II. Aggregate

1. Coarse: 25 mm (1") nominal sized naturally occurring siliceous gravel consisting of chert and quartzite. The particles were mostly rounded to sub-angular in shape. The coarse aggregate appeared well graded and exhibited fair overall distribution. Few coarse aggregate particles greater than 10 mm (3/8") diameter were observed within the top 19 mm (3/4") of the sample.

2. Fine: Natural quartz, feldspar, and lithic sand (quartzite, meta-granite, chert, siltstone and shale particles). The grains were mostly sub-rounded to sub-angular with many smaller angular particles. The fine aggregate appeared fairly graded and exhibited good overall uniform distribution.

III. Cementitious Properties

1.	Air Content:	1.8% total
2.	Depth of carbonation:	Ranged from 1 mm (1/32") up to 2 mm (1/16") depth from the top surface of the concrete, and "spiked" up to 3 mm (1/8") along sub-vertical microcracking. Ranged from 9 mm (3/8") up to 27 mm (1-1/16") depth from the bottom surface of the concrete.
3.	Paste/aggregate bond:	Fair
4.	Paste color:	Similar to medium gray (Munsell® N5) overall, becoming medium dark gray within the top 3 mm (1/8"). Similar to light olive gray (Munsell® 5Y 6/1) on the formed bottom surface.
5.	Paste hardness:	Moderate (Mohs ≈3).

6.	Microcracking:	A few sub-vertical microcracks were observed proceeding from the top surface of the concrete up to 9 mm (3/8") depth. The microcracks proceeded primarily around aggregate particles. Several sub-vertical microcracks were observed proceeding from the bottom surface up to 5 mm (3/16") depth. Concentrated, fine sub-horizontal microcracking, or "micro-bruising" was observed within the top 0.5 mm of the concrete.
7.	Secondary deposits:	White, acicular ettringite was observed lining many air voids and filling several of the smallest air voids throughout the non-carbonated paste.
8.	w/cm:	Estimated at between 0.45 and 0.50 with approximately 4 to 6% residual portland cement clinker.
9.	Cement hydration:	Alites: Fully Belites: Well to fully

24-LAB-001 Petrographic Examination of Hardened Concrete
ASTM C856

Project No.	24-01883	Date:	10-14-2016	Date reviewed:	10-26-2016
Sample ID:	P-2	Performed by:	S. Massignan	Reviewed by:	C. Tillema

I. General Observations

1. Sample Dimensions: Our analysis was performed on the 145 mm (5-11/16") thick concrete portion of two 146 mm (5-3/4") x 93 mm (3-11/16") x 45 mm (1-3/4") thick lapped profile sections and a 76 mm (3") x 52 mm (2") thin section that were sawcut and prepared from the original 95 mm (3-3/4") diameter x 146 mm (5-3/4") long core.

2. Surface Conditions:
   Top: Fairly rough, mortar eroded/abraded surface; overlain by a coating.
   Bottom: Fairly smooth, planar, formed surface; placed in formwork.

3. Reinforcement: None observed.

4. General Physical Conditions: The concrete was overlain by an approximately 1 mm (1/32") thick, coating system consisting of a thin, discontinuous layer of translucent yellow, epoxy-like polymer overlain by a medium gray, more resilient polymer material with fine sand broadcast into the surface. Several of the fine sand particles were observed to have been "plucked out," leaving an impression in the coating. The coating system was poorly to fairly bonded to the concrete. Approximately 20% of the coating was missing upon sample receipt, possibly from sample procurement. Approximately 20% of the remaining coating was observed to have peeled away or de-bonded from the concrete, along the cored perimeter of the sample. The top surface of the concrete appeared to be abraded/prepped prior to the application of the coating; with abundant fine aggregate particles exposed at the top surface. We estimate the CSP (concrete surface profile) to be 3. Concentrated, fine sub-horizontal microcracking, or "micro-bruising", was observed within the top 1 mm (1/32") of the concrete. Several sub-vertical microcracks were observed proceeding from the top surface of the concrete up to 10 mm (3/8") depth. A single sub-vertical microcrack was observed proceeding from the top surface of the concrete up to 23 mm (7/8") maximum depth, proceeding through a couple of fine aggregate particles. A few sub-vertical microcrack were observed proceeding from the bottom surface up to 16 mm (5/8") depth. A 4 mm (3/16") long, sub-horizontal microcrack was observed within the bottom 1 mm (1/32") of the sample. The depth of carbonation ranged from negligible up to 1 mm (1/32") depth from the top surface of the concrete. Carbonation ranged from 4 mm (5/32") up to 32 mm (1-1/4") from the bottom surface. Several entrained- and entrapped-sized air voids were observed on the formed bottom surface. White, acicular ettringite was observed lining many air voids and filling several of the smallest air voids throughout the non-carbonate paste. The concrete was air-entrained, with a total air content of 2.0% and entrained air content of 1.4%. The concrete exhibited a spacing factor of 0.014" and specific surface of 490 in^2/in^3. The air void system was not consistent with current American Concrete Institute (ACI) recommendations for freeze-thaw resistance. Darker, denser areas of paste with fewer air voids were observed in the recessed notches of a few coarse aggregate particles.

II. Aggregate

1. Coarse: 25 mm (1") nominal sized naturally occurring siliceous gravel consisting of chert and quartzite. The particles were mostly rounded to sub-angular in shape. The coarse aggregate appeared well graded and exhibited good overall distribution.

2. Fine: Natural quartz, feldspar, and lithic sand (quartzite, meta-granite, chert, siltstone and shale particles). The grains were mostly sub-rounded to sub-angular with many smaller angular particles. The fine aggregate appeared fairly graded and exhibited good overall uniform distribution.

III. Cementitious Properties

1. Air Content: 2.0% total
2. Depth of carbonation: Ranged from negligible up to 1 mm (1/32") depth from the top surface of the concrete. Ranged from 4 mm (5/32") up to 32 mm (1-1/4") depth from the bottom surface of the concrete.
3. Paste/aggregate bond: Poor
4. Paste color: Similar to medium gray (Munsell® N5) overall. Similar to light olive gray (Munsell® 5Y 6/1) on the bottom surface.
5. Paste hardness: Moderate (Mohs ≈3).

6. Microcracking: Several sub-vertical microcracks were observed proceeding from the top surface of the concrete up to 10 mm (3/8") depths. A single sub-vertical microcrack was observed to proceed from the top surface of the concrete up to 23 mm (7/8") maximum depth, proceeding through a couple of fine aggregate particles. Concentrated, fine sub-horizontal microcracking, or "micro-bruising", was observed, in thin section, within the top 1 mm (1/32") of the concrete. Several sub-horizontal microcracks of varying lengths were observed in the top up to 2 mm (1/16") of the sample, proceeding primarily around aggregate particles. A few sub-vertical microcracks were observed proceeding from the bottom surface up to 16 mm (5/8") depths. A sub-horizontal microcrack was observed up to 1 mm (1/32") above the bottom surface of the sample, proceeding approximately 4 mm (5/32") in length.
7. Secondary deposits: White, acicular ettringite was observed lining many air voids and filling several of the smallest air voids throughout the sample.
8. w/cm: Estimated at between 0.45 and 0.50 with approximately 4 to 6% residual portland cement clinker particles.
9. Cement hydration: Alites: Fully
Belites: Well to fully

AMERICAN ENGINEERING TESTING, INC.

AIR VOID ANALYSIS

PROJECT:
CARTER BARRON AMPHITHEATER
ECS PROJECT NO.: 46:2391

REPORTED TO:
ENGINEERING CONSULTING SERVICES
MID-ATLANTIC, LLC
14026 THUNDERBOLT PLACE, SUITE 100
CHANTILLY, VA 20151-3232

ATTN: ALEXIS HERR

AET PROJECT NO: 24-01883

DATE: OCTOBER 31, 2016

Sample ID: P-1

Conformance: The concrete contains an air void system which is not consistent with current American Concrete Institute (ACI) recommendations for freeze-thaw resistance.

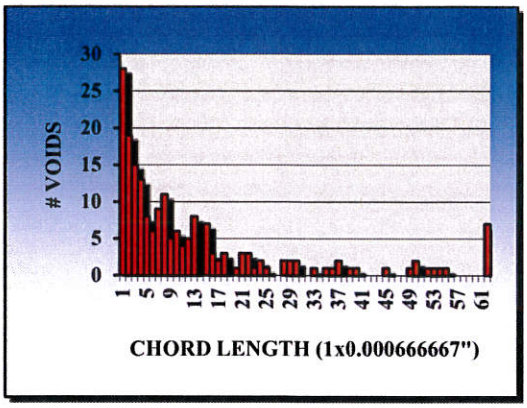

Sample Data

Description: Hardened Concrete Core
Dimensions: 95 mm (3-3/4") diameter by 146 mm (5-3/4") long

Test Data: By ASTM C457, Procedure A

Air Void Content %	1.8
Entrained, % < 0.040"(1mm)	1.4
Entrapped, %> 0.040"(1mm)	0.4
Air Voids/inch	2.0
Specific Surface, in^2/in^3	430
Spacing Factor, inches	0.019
Paste Content, % estimated	32
Magnification	75x
Traverse Length, inches	96
Test Date	10/10/2016
Test Performed By	S. Massignan

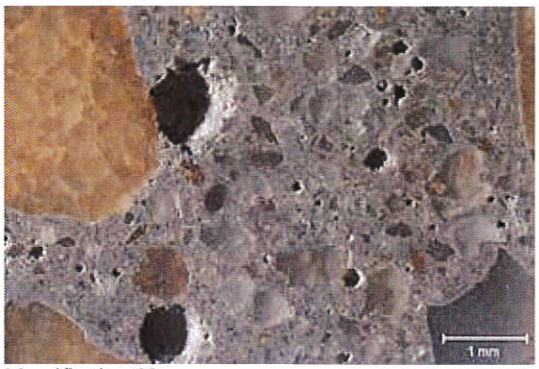

Magnification: 30x
Description: Hardened air void system.

This document shall not be reproduced, except in full, without written approval from American Engineering Testing, Inc.

AMERICAN ENGINEERING TESTING, INC.

AIR VOID ANALYSIS

PROJECT:
CARTER BARRON AMPHITHEATER
ECS PROJECT NO.: 46:2391

REPORTED TO:
ENGINEERING CONSULTING SERVICES
MID-ATLANTIC, LLC
14026 THUNDERBOLT PLACE, SUITE 100
CHANTILLY, VA 20151-3232

ATTN: ALEXIS HERR

AET PROJECT NO: 24-01883

DATE: OCTOBER 31, 2016

Sample ID: P-2

Conformance: The concrete contains an air void system which is not consistent with current American Concrete Institute (ACI) recommendations for freeze-thaw resistance.

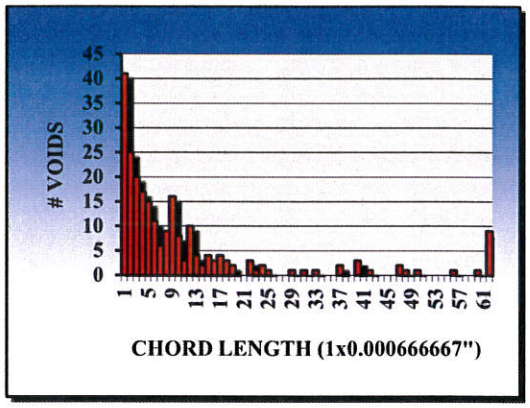

Sample Data

Description: Hardened Concrete Core
Dimensions: 95 mm (3-3/4") diameter by 146 mm (5-3/4") long

Test Data: By ASTM C457, Procedure A

Air Void Content %	2.0
Entrained, % < 0.040"(1mm)	1.4
Entrapped, %> 0.040"(1mm)	0.6
Air Voids/inch	2.4
Specific Surface, in^2/in^3	490
Spacing Factor, inches	0.014
Paste Content, % estimated	23
Magnification	75x
Traverse Length, inches	96
Test Date	10/12/2016
Test Performed By	S. Massignan

Magnification: 30x
Description: Hardened air void system.

This document shall not be reproduced, except in full, without written approval from American Engineering Testing, Inc.

AET PROJECT NO: 24-01883 **DATE:** OCTOBER 31, 2016

PROJECT: CARTER BARRON AMPHITHEATER
ECS PROJECT No: 46:2391

PHOTO: 1

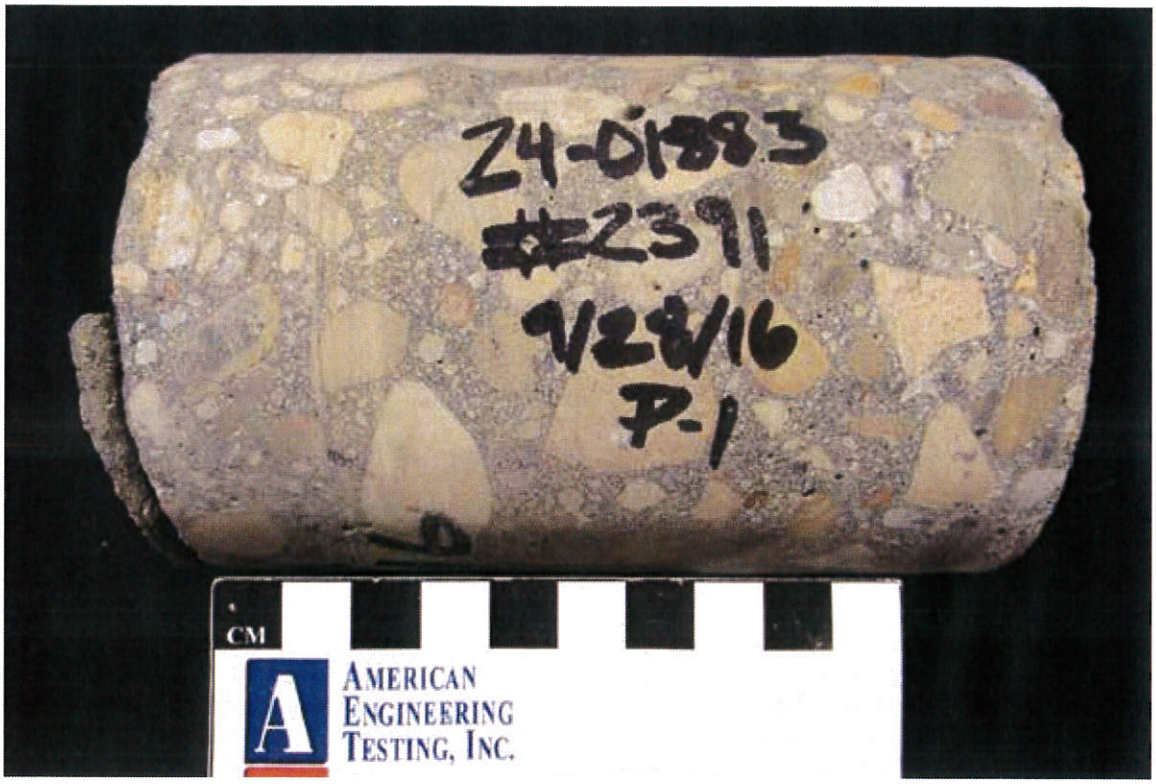

SAMPLE ID: P-1 **DESCRIPTION:** Profile view of the sample as received with the top surface to the left.

PHOTO: 2

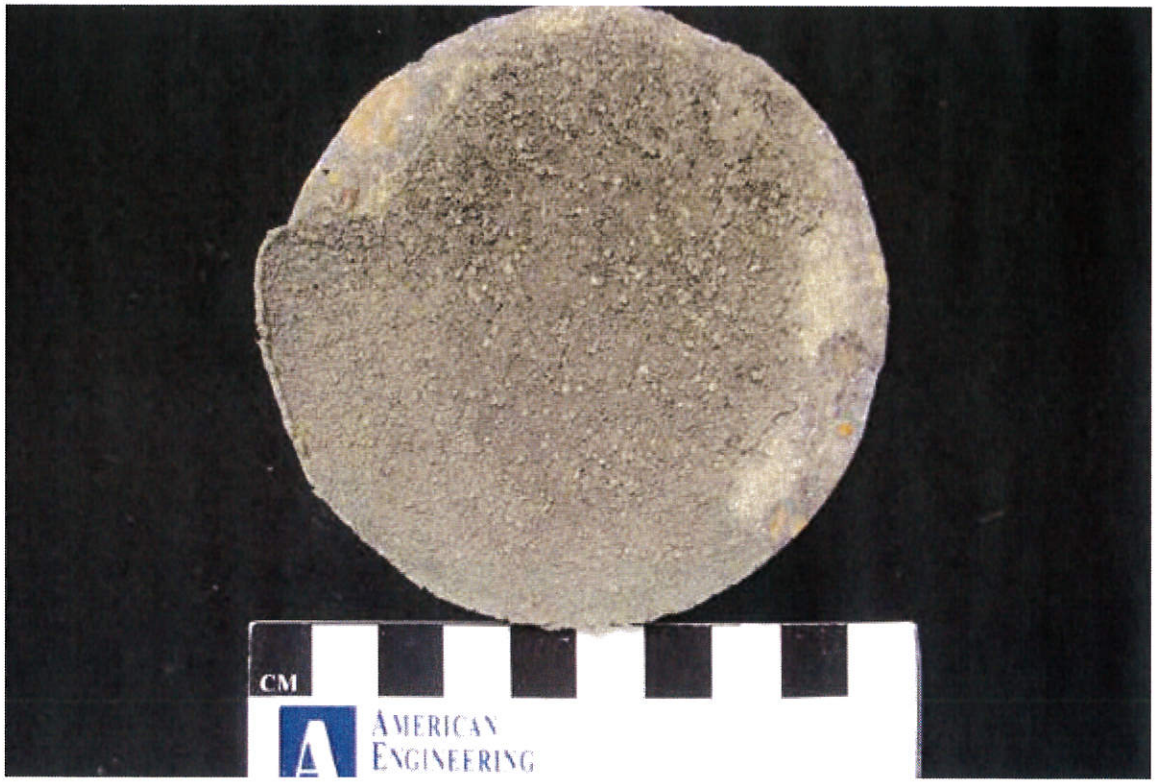

SAMPLE ID: P-1 **DESCRIPTION:** Coated top surface of the sample as received.

AET PROJECT NO: 24-01883 **DATE:** OCTOBER 31, 2016

PROJECT: CARTER BARRON AMPHITHEATER
ECS PROJECT No: 46:2391

PHOTO: 3

SAMPLE ID: P-2 **DESCRIPTION:** Profile view of the sample as received with the top surface to the left.

PHOTO: 4

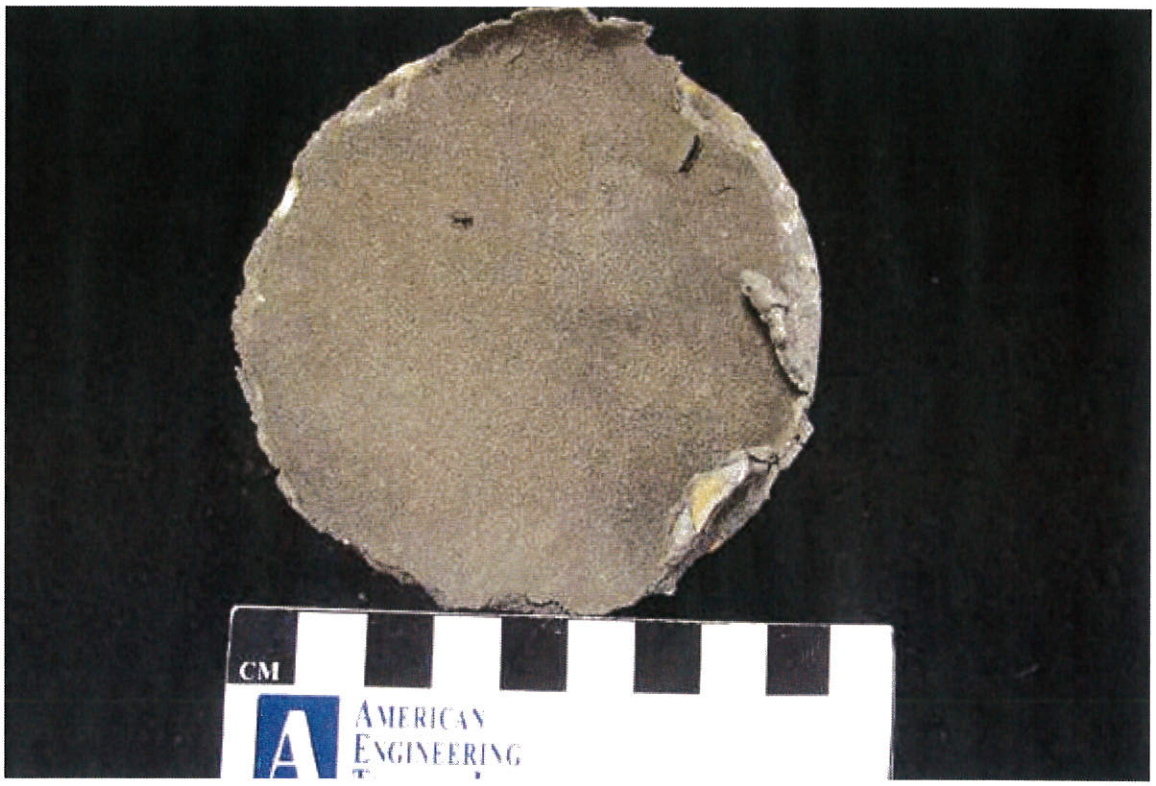

SAMPLE ID: P-2 **DESCRIPTION:** Coated top surface of the sample as received.

AET PROJECT NO: 24-01883 **DATE:** OCTOBER 31, 2016

PROJECT: CARTER BARRON AMPHITHEATER
ECS PROJECT No: 46:2391

PHOTO: 5

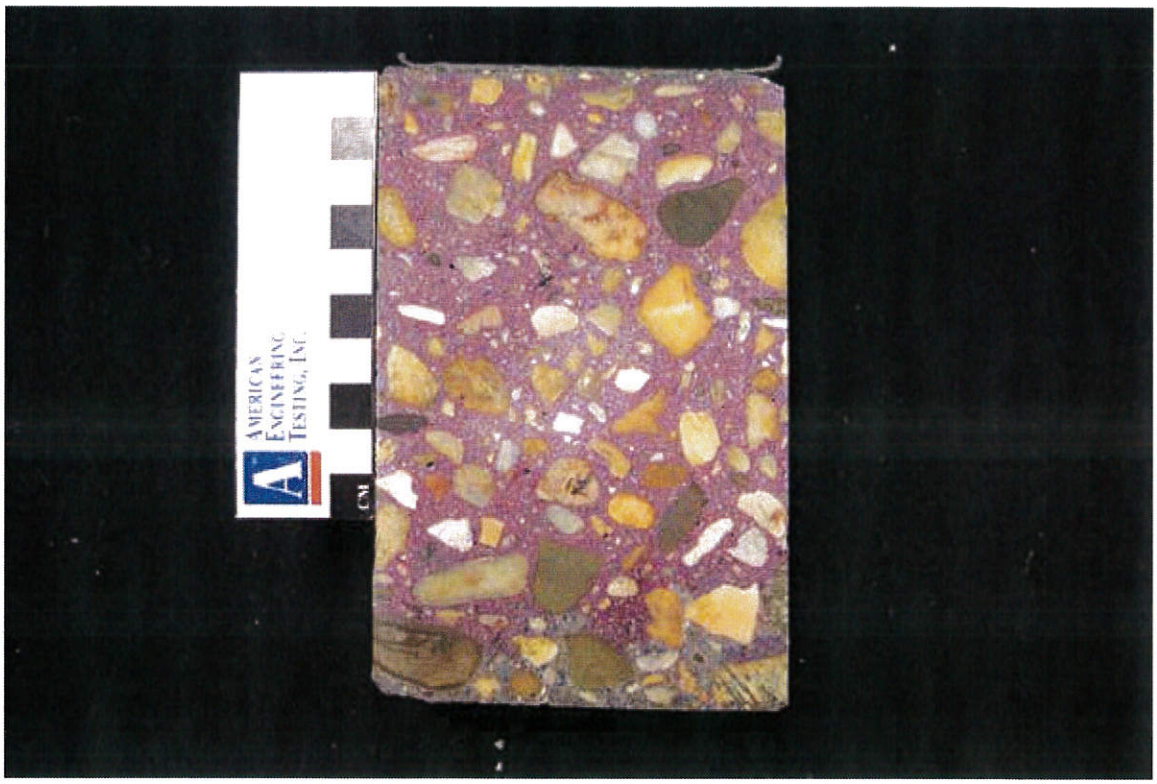

SAMPLE ID: P-1

DESCRIPTION: Carbonation (unstained paste) occurred thinly at the top surface (≤ 3 mm) and proceeded up to 27 mm (1-1/16") from the bottom surface of the sample. Observed on a freshly saw-cut and lapped profile of the core sample treated with the pH indicator phenolphthalein.

PHOTO: 6

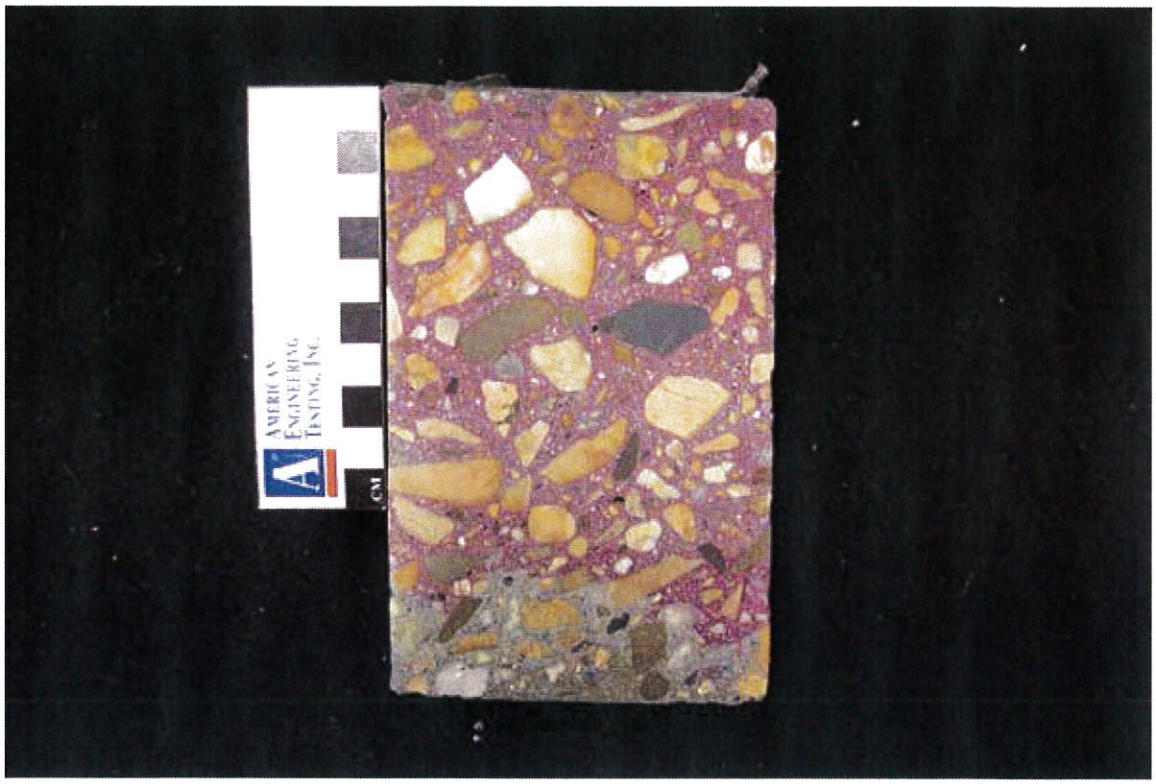

SAMPLE ID: P-2

DESCRIPTION: Carbonation (unstained paste) occurred thinly at the top surface (≤ 1 mm) and proceeded up to 32 mm (1-1/4") from the bottom surface of the sample. Observed on a freshly saw-cut and lapped profile of the core sample treated with the pH indicator phenolphthalein.

AET PROJECT NO: 24-01883 **DATE:** OCTOBER 31, 2016

PROJECT: CARTER BARRON AMPHITHEATER
ECS PROJECT No: 46:2391

PHOTO: 7

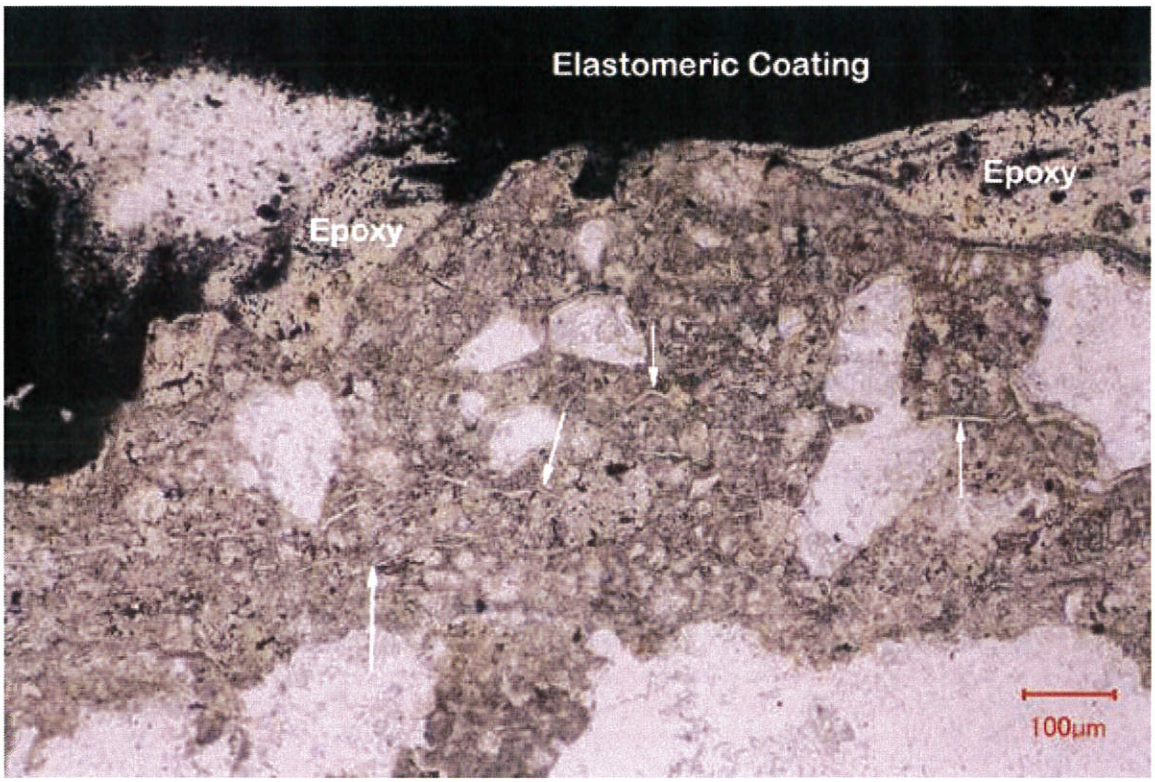

SAMPLE ID: P-1
MAG; 100x

DESCRIPTION: Thin section of a profile of the top surface of the sample viewed with plane polarized light. White arrows indicate a few of the fine microcracks (micro-bruising) likely induced in the top most concrete by abrasion (prep) of the top surface of the concrete.

PHOTO: 8

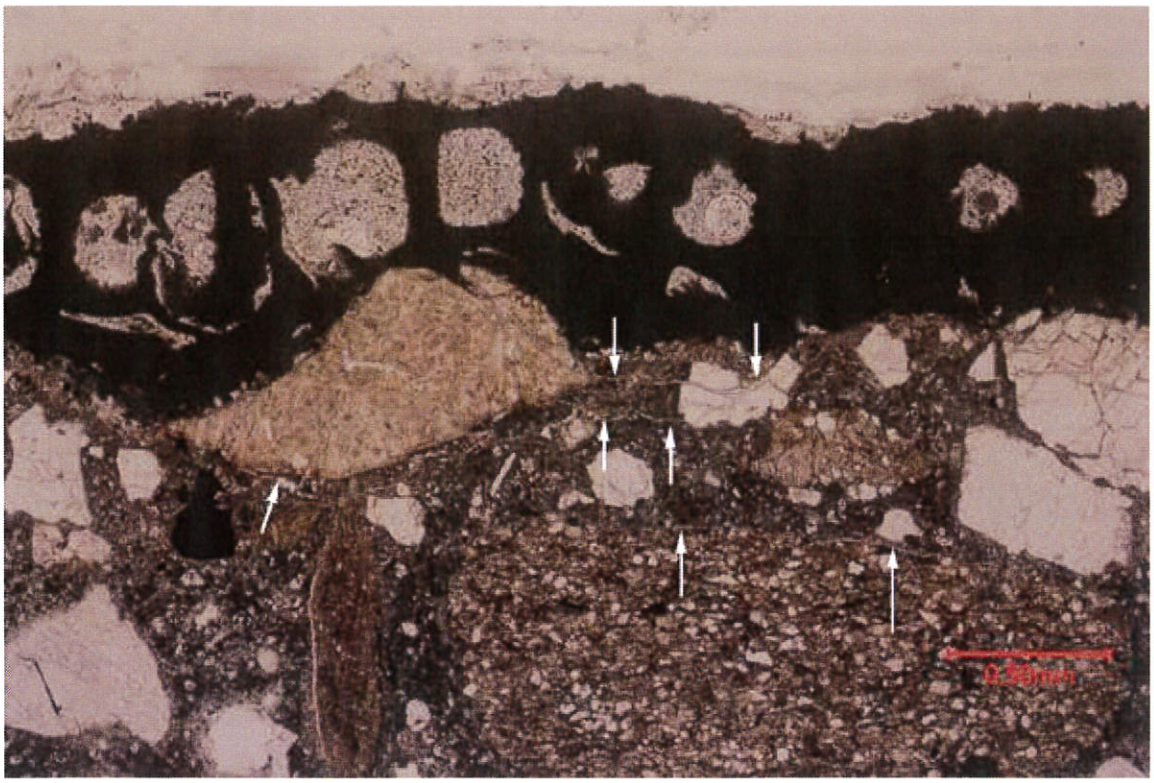

SAMPLE ID: P-2
MAG: 40x

DESCRIPTION: Micro-bruising induced by abrasion (prep) of the top surface is seen as fine microcracks proceeding through the paste and aggregate particles was observed proximate to the top surface of the concrete. Observed in thin section viewed with transmitted plane polarized light.

AET PROJECT NO: 24-01883 **DATE:** OCTOBER 31, 2016

PROJECT: CARTER BARRON AMPHITHEATER
ECS PROJECT No: 46:2391

PHOTO: 9

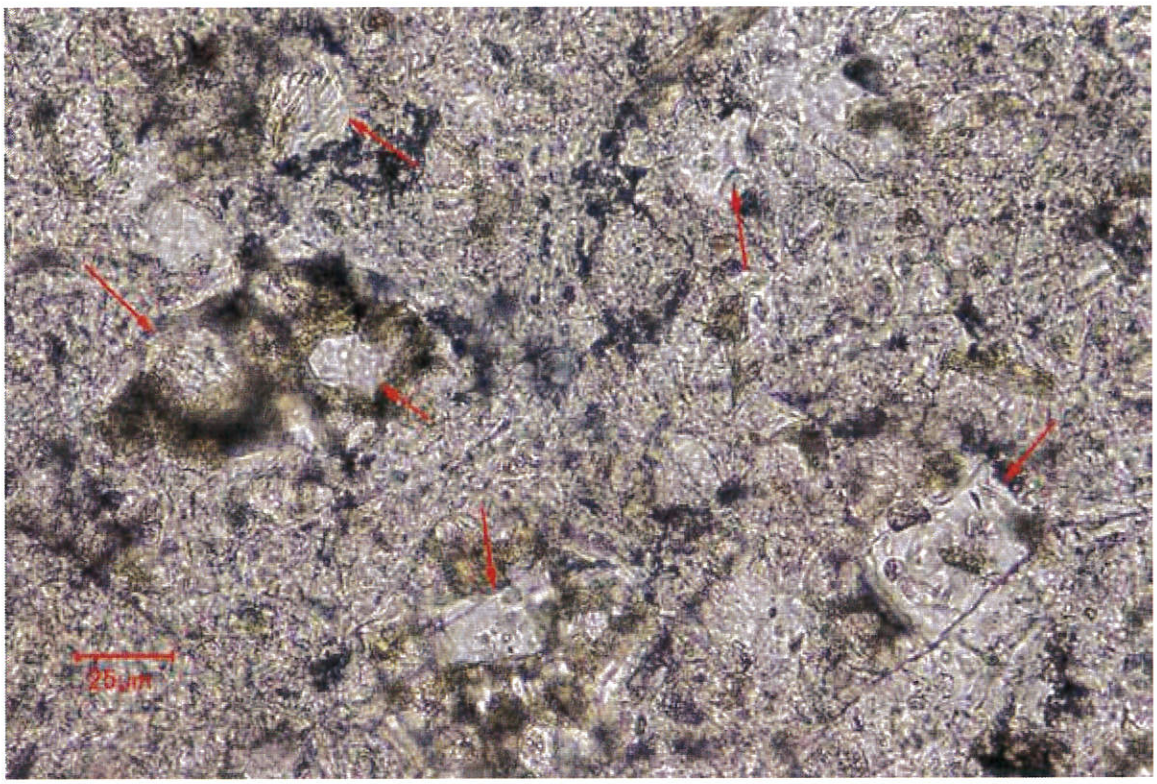

SAMPLE ID: P-1
MAG; 400x

DESCRIPTION: Clear, fully hydrated relict alite portland cement particles (clear) observed in thin section of concrete paste viewed with transmitted plane polarized light.

PHOTO: 10

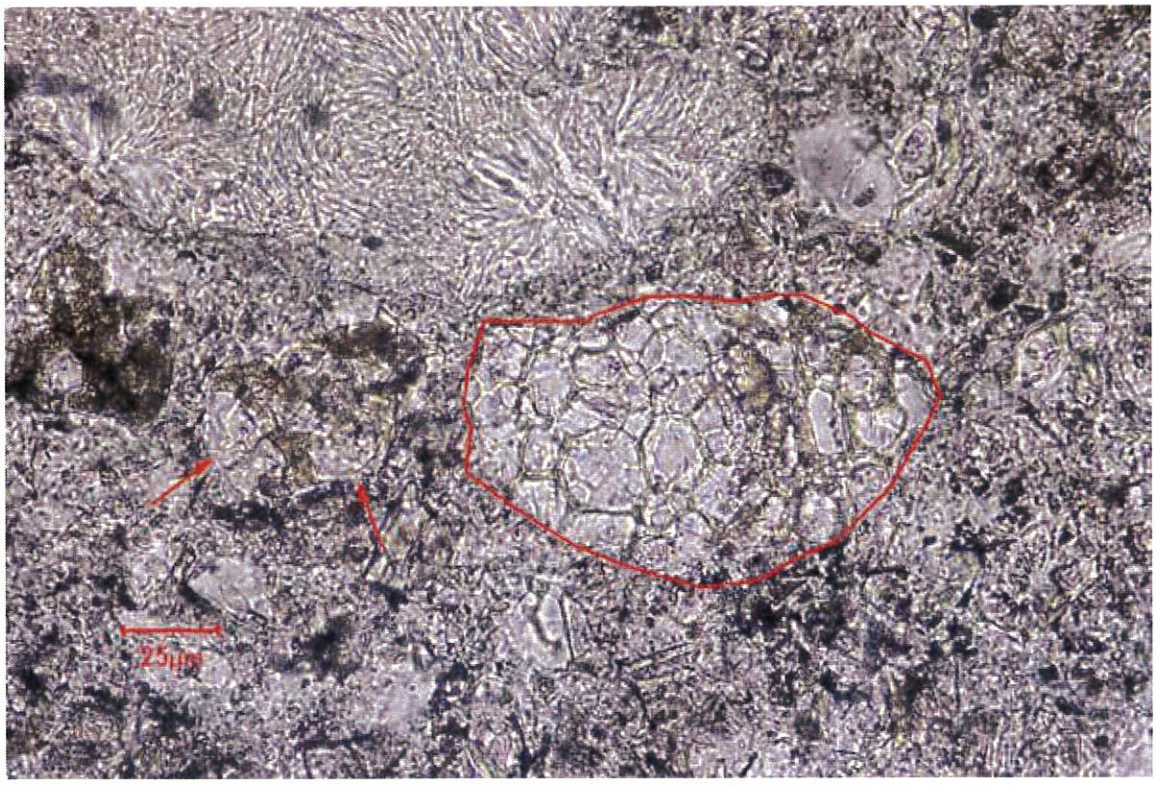

SAMPLE ID: P-2
MAG: 400x

DESCRIPTION: Fully hydrated relict alite portland cement particles (clear) observed in thin section of concrete paste viewed with transmitted plane polarized light. Acicular (needle-like) ettringite fills the void in the top left of the photo.