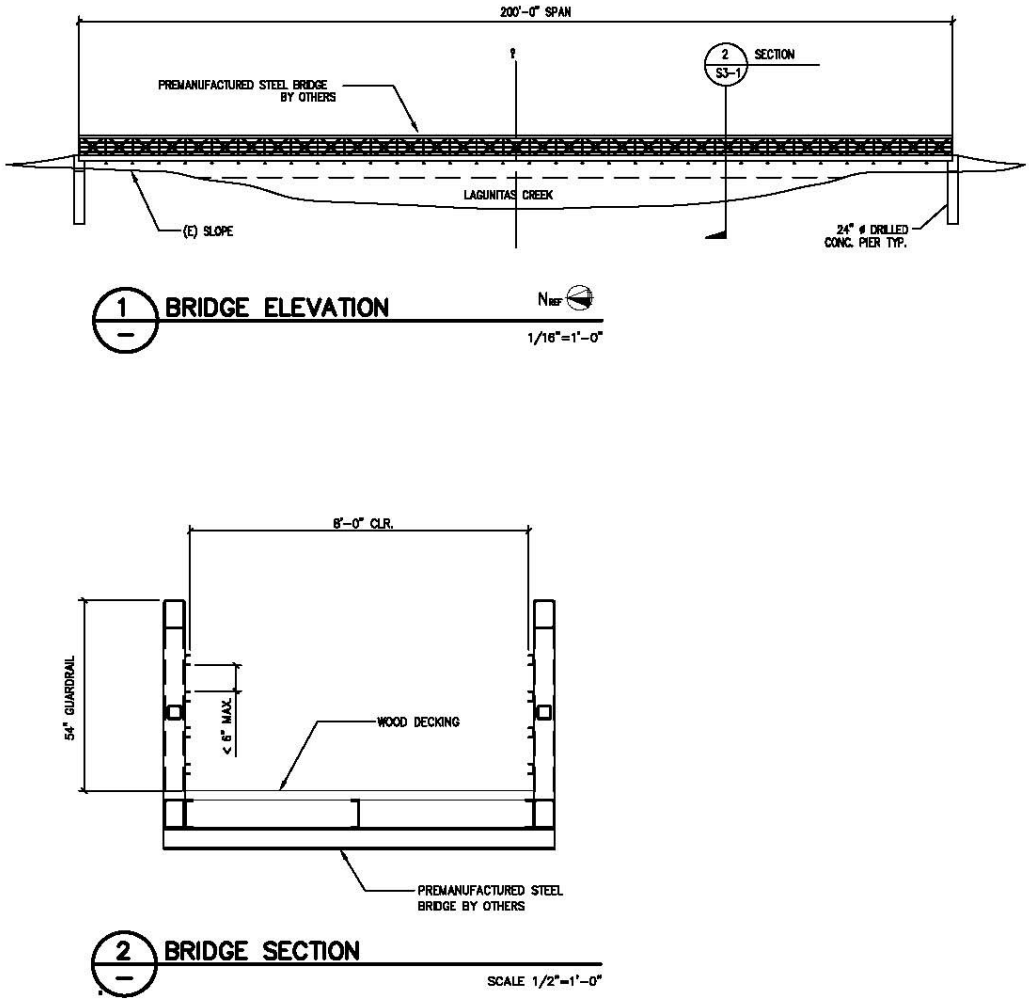Figure 10: 200' Steel Bridge Section/Elevation