RECEIVED 2280 301
APR 15 2016
Nat. Register of Historic Places
National Park Service

United States Department of the Interior
National Park Service

National Register of Historic Places Registration Form

This form is for use in nominating or requesting determinations for individual properties and districts. See instructions in National Register Bulletin, How to Complete the National Register of Historic Places Registration Form. If any item does not apply to the property being documented, enter "N/A" for "not applicable." For functions, architectural classification, materials, and areas of significance, enter only categories and subcategories from the instructions.

1. Name of Property

Historic Name: Lincoln, George, House
Other Names/Site Number: N/A
Name of related multiple property listing: N/A

2. Location

Street & Number: 30783 Parish Highway 11
City or town: Nairn State: Louisiana County: Plaquemines
Not for Publication: ☐ Vicinity: ☐

3. State/Federal Agency Certification

As the designated authority under the National Historic Preservation Act, as amended, I hereby certify that this ☒ nomination ☐ request for determination of eligibility meets, meets the documentation standards for registering properties in the National Register of Historic Places and meets the procedural and professional requirements set forth in 36 CFR Part 60. In my opinion, the property ☒ meets ☐ does not meet the National Register Criteria.

I recommend that this property be considered significant at the following level(s) of significance:
☐ national ☐ state ☒ local

Applicable National Register Criteria: ☐ A ☐ B ☒ C ☐ D

4-8-16

Signature of certifying official/Title: Phil Boggan, State Historic Preservation Officer **Date**

Louisiana Department of Culture, Recreation, and Tourism

State or Federal agency/bureau or Tribal Government

In my opinion, the property ☐ meets ☐ does not meet the National Register criteria.

Signature of commenting official: **Date**

Title: **State or Federal agency/bureau or Tribal Government**

4. National Park Certification

I hereby certify that the property is:

✓ entered in the National Register Automatic
___ determined eligible for the National Register
___ determined not eligible for the National Register
___ removed from the National Register
___ other, explain: _____

5.31.2016

Signature of the Keeper **Date of Action**

5. Classification

Ownership of Property (Check as many boxes as apply.)

x	Private
	Public – Local
	Public – State
	Public – Federal

Category of Property (Check only **one** box.)

x	Building(s)
	District
	Site
	Structure
	object

Number of Resources within Property (Do not include previously listed resources in the count)

Contributing	Non-contributing	
1		Buildings
		Sites
		Structures
		Objects
1	0	Total

Number of contributing resources previously listed in the National Register: 0

6. Function or Use

Historic Functions (Enter categories from instructions.): Domestic: Single Dwelling

Current Functions (Enter categories from instructions.): Domestic: Single Dwelling

7. Description

Architectural Classification (Enter categories from instructions.): Late 19th and Early 20th Century American Movements: Bungalow/Craftsman

Materials: (enter categories from instructions.)
Foundation: Piers
Walls: Cypress
Roof: Metal
Other:

Narrative Description
(Describe the historic and current physical appearance and condition of the property. Describe contributing and noncontributing resources if applicable. Begin with **a summary paragraph** that briefly describes the general characteristics of the property, such as its location, type, style, method of construction, setting, size, and significant features. Indicate whether the property has historic integrity.)

Summary Paragraph
The George Lincoln House, located in southern Plaquemines Parish, began construction in 1930 in the rural Mississippi River community of Nairn, Louisiana. The property was originally 27.7 acres with 95 feet of river front extending to the brackish water swamp of the Gulf of Mexico. The land featured about 15 acres of orange groves in front of and behind the house. George Lincoln was a third generation citrus farmer. The house was built during the Great Depression by local contractors John and Elmore Edgecombe for their childhood friends George and Marie Cognevich Lincoln. The house was damaged by Hurricane Katrina when it was floated off of its piers by 20 feet of water, but it stayed intact and was replaced on its original piers in its original place with relatively little damage done to the original historic features. One of the porch columns was rebuilt, but the exterior and interior retain many original Craftsman bungalow elements as well as integrity of location, setting, feeling, association, materials, design, and workmanship. For these reasons, it is eligible for listing on the National Register. Today, the area surrounding the house and property is still orange groves and some modern residences.

Narrative Description

In 1929, George and Marie Lincoln took all of their savings from their New Orleans bank to build a new home in their small orchard just off rural Louisiana Highway 23, a gravel road, in the Nairn community in Plaquemines Parish, Louisiana. A few days later, the Great Depression began with a run on the banks. George and Marie were fortunate that they had money when few did. George and Marie had talked to a childhood friend and local contractor, John Edgecombe, about building their new house. Edgecombe was a master builder, noted for his quality building techniques and the highly skilled craftsmen that worked for him. Edgecombe knew the cost of materials would decrease during the Depression, but jobs would also became scarce. Edgecombe was more concerned with keeping his men employed than making a large profit from the job. Lincoln and Edgecombe agreed that high quality materials would be used and Edgecombe's best craftsmen would be assigned to do the work, but the final completion time would drift to allow Edgecombe to maximize the other work available. It was a win-win for everyone. Construction was delayed until 1930 when Edgecombe's existing work load slowed. As a result, the house completed with high quality materials, greater

functionality, and ultimately would be one of the very few houses in lower Plaquemines Parish to survive Hurricane Katrina in 2005.

The George Lincoln house was built for a working middle-class farm family with three young children in a rural, infrequently flooded area with semi-tropical temperatures. For comfort, the house was built with large windows for cross ventilation from front to back and side to side, allowing air flow from all directions. There are high ceilings inside and wide, shaded porches across the front and back. The walls are built in such a way as to move the cool air from below the house through the walls, through the attic and out of the attic windows when the windows are opened. The gabled roof was originally covered with asbestos roofing tiles. Though those original tiles are still intact, now they are covered with a metal roof. There are three square concrete columns with wooden cornices supporting the overhanging attic which covers the front porch. The back porch was originally screened. The house was built on piers approximately 3 feet high to protect it from flooding. Its walls are durable cypress planks covered by sheetrock. There were two narrow fireplaces to burn coal rather than wood. The house is two rooms wide and four deep. The three bedrooms and bathroom extend along the warmer south side of the house. The north, or upriver side of the house, has a spacious living room which occupies about ¼ of the house. The dining room and living room are divided by a matching set of built-in book shelves. The Lincolns had a large extended family in the area so this would often be the meeting place for Sunday meals and family get-togethers. Behind the dining room was a comfortable kitchen with a large preparation/canning area and a small dining area. In addition to the built in book shelves, the house had cypress shoe molding, window and door trim. The total size of the house is approximately 2600 square feet.

The house was built facing east towards LA. Highway 23 and the railroad, but otherwise surrounded by lush green orange groves from the Mississippi River to the Gulf of Mexico swamp. A few more houses were either moved or built nearby, but Nairn remained a rural community. The dusty, gravel highway was paved in the 1940's and eventually it was moved and expanded to a four lane in the 1970's about ¼ mile west of the "old road." The "old road" was changed to LA Highway 11.

Façade (east elevation)

The façade features a set of three grouped three over two double hung wood windows and a front entry multi-lite door with matching multi-lite side lites and transom. The side lites and transoms retain their original screens. The entire building is clad in wood siding painted white and the roof is now a metal roof, replaced following Hurricane Katrina and installed directly on top of the original diamond shaped asbestos roof. The inset full width front porch is supported by three full height concrete columns. One of the three matching columns was broken and had to be replaced after Katrina when the house was floated off its pier foundation by 20 feet of water. Between the three columns is an eight inch wide by four inch thick "handrail" used by guests as benches as well as handrails. At the top of the columns is a small, compressed column of sorts. Above these features is a beam spanning the length of the porch. A band of 13 repeating wooden blocks is above the beam and is topped with the fascia of the front gabled roof. A two lite window with decorative framing is centrally located in the gable end. The overhanging front roof is supported by five triangular knee braces. (See Photo 1, Figures 1, 2, 3, 4, and 11)

South Elevation

This elevation features three sets of two grouped windows, matching those on the façade. A single double hung window is located in the third bay, between two of the sets of grouped windows. These double sets of windows are in the bedrooms and the single double hung window is the bathroom window. A gutter has been added on the two side elevations covering up parts of the exposed rafter

tails, but the tails themselves are still intact. At the rear is an inset back porch, formerly enclosed with screening with the framing still in place. (See Photo 2)

West Elevation

This elevation features the previously mentioned inset full width back porch with a centrally located entrance, which leads to the rear hallway. A narrow three-lite transom sits atop this door. To its right is a single double-hung three over two wood window. To its left is another window, paired with a second entrance, leading directly into the kitchen. This door has been replaced with a more modern door while the other entrance is an original multi-lite door. Original screen doors are intact on both entries. The gable end has a two-lite window matching the one on the façade. The gable also has 5 matching triangular knee braces. The ceiling of the porch is bead board. (See photos 3 and 4 and Figures 6 and 7)

North Elevation

This elevation has a centrally placed projection with a cross gable roof. The projection has two sets of grouped double hung wood windows – a set of three and a set of two. Above the windows is a band of repeating square wooden blocks just below the fascia. The gable end has another matching two-lite window like on the front and rear and five triangular knee braces in the eaves. To the rear of the projection, there is a smaller three over two double-hung wood window, which is the kitchen window. To the front of the projection is a set of three grouped double-hung wood windows. A wooden handicapped ramp was added to the front of the projection in 2008, providing access to the front porch. It runs parallel to the north elevation. (See Photos 5 and 6 and Figures 6 and 7).

Interior

The interior has received a few updates since construction, but overall, retains its original plan and details. The front entrance leads directly into the living room, which is divided from the dining area by typical Craftsman building in bookshelves (see Photos 5 and 6). Behind the living room is the dining room and behind the dining room is the kitchen – a typical floor plan for Craftsman bungalows. The left side of the house has the three bedrooms in a row with the original bathroom located closer to the rear bedroom. Currently, the second bedroom has been converted to a second larger bathroom. The interior woodwork was originally stained, but painted by residents living in the home just prior to Katrina as seen in Figures 13-24. The woodwork has been stripped to its original stained look. This includes window and door surrounds and the bookshelves and interior columns atop the bookshelves. All of the two panel wood interior doors are intact as well as the crystal door knobs and hardware. The only changes made to the interior include the loss of the fireplaces in the 1940s and after Hurricane Katrina, new wood flooring and tile (kitchen and bathroom) on top of the original wood floors (which were previously covered with linoleum), and the removal of a portion of a wall in the rear hallway to provide an opening into the kitchen. The original kitchen pantry has been incorporated into the kitchen as a new location for a sink (see Photo 8).

Integrity and Mitigation of Alterations

The George Lincoln house was not built with electricity. Electricity was added in the early 1940's and completely updated in 2008 when the house was restored to its foundations and renovated after Katrina. It originally had two fireplaces. The one in the kitchen was removed in the 1940's when they bought a modern stove. The double fireplace between the Family Room and middle bedroom had to be removed because the chimney bricks had gotten damaged when the house floated during Hurricane Katrina.

The house was built primarily of cypress and probably 90% of the original wood remains intact. Several areas where the cypress had to be removed were: (1) the front porch had to be rebuilt as a result of hurricane damage; (2) some of the interior trim work was replaced as it got damaged; and (3) a non-cypress plywood patch was installed on the roof, but all joists, etc. are original cypress. The original floor was pine, which was later covered with linoleum (see Figures 13-24).

When Hurricane Katrina hit, the house was not attached to its pilings, so it broke the piping and fireplace and floated in place until the water went down. It returned just a few feet from its original foundation. Because of difficulty getting workers at the time and complete destruction of virtually all housing in the area, the house remained off its foundation, lying at an angle for over two years. Despite being water soaked, structurally it was in excellent condition. In 2007, George Lincoln's grandson, Kerry Lincoln, began renovating the house. In 2008, it was put back onto its original piers in its original place. The sheetrock was replaced and some modifications made to make it livable, but care was given to maintain its structural integrity. After Katrina, the pine floor was heavily damaged by the water and it was covered with heavy oak.

Structurally it had mold and some damage but the main part of the house was in excellent condition. When the sheetrock was removed, he found solid walls of cypress planking. Everything was as tight as when it was built. When the roof was opened up, they found the all-cypress attic in perfect shape except for an apparent roof puncture in the distant past where a piece of plywood was nailed to the cypress beams. The plywood was replaced, but the cypress was as good as new.

Overall, the George Lincoln House retains a high degree of integrity. It has lost some of its integrity of materials through the loss of its original wall covering, flooring materials, and the new roof and gutters, but the majority of the original materials are intact in the wood work, exterior cladding, windows, and doors. It also retains integrity of location, setting, feeling, association, design, and workmanship. For these reasons, it is eligible for listing on the National Register.

8. Statement of Significance

Applicable National Register Criteria (Mark "x" in one or more boxes for the criteria qualifying the property for National Register listing.)

	A	Property is associated with events that have made a significant contribution to the broad patterns of our history.
	B	Property is associated with the lives of persons significant in our past.
x	**C**	Property embodies the distinctive characteristics of a type, period, or method of construction or represents the work of a master, or possesses high artistic values, or represents a significant and distinguishable entity whose components lack individual distinction.
	D	Property has yielded, or is likely to yield, information important in prehistory or history

Criteria Considerations:

	A	Owned by a religious institution or used for religious purposes
	B	Removed from its original location
	C	A birthplace or grave

	D	A cemetery
	E	A reconstructed building, object, or structure
	F	A commemorative property
	G	Less than 50 years old or achieving significance within the past 50 years

Areas of Significance (Enter categories from instructions.): Architecture

Period of Significance: 1930

Significant Dates: 1930

Significant Person (Complete only if Criterion B is marked above): N/A

Cultural Affiliation (only if criterion D is marked above): N/A

Architect/Builder (last name, first name): Edgecombe, John, and son Elmore, Sr.

Period of Significance (justification): The period of significance is 1930, the year the house was constructed.

Criteria Considerations (explanation, if necessary): N/A

Statement of Significance Summary Paragraph (Provide a summary paragraph that includes level of significance, applicable criteria, justification for the period of significance, and any applicable criteria considerations.)

The George Lincoln House is of local significance in the area of architecture as it embodies the characteristics of the Craftsman style within Plaquemines Parish. The parish has a handful of earlier homes in the French Creole, Greek Revival, and Italianate styles, but has very few early 20th century American styled homes. Due to the parish's location on the Gulf of Mexico and Mississippi River, its historic building stock has suffered tremendously over the years due to storms and flooding. The Lincoln House is a rare survivor of the Craftsman style and retains many original features such as eave brackets, exposed rafter tails, multi-lite original wood windows, built in cabinets as interior room dividers, and wood paneled interior doors with transoms. The period of significance for the house is 1930, the date of its construction.

Narrative Statement of Significance (Provide at least **one** paragraph for each area of significance.)

History of Nairn and Plaquemines Parish

Plaquemines Parish is located at the extreme southeastern end of Louisiana and is a 100 mile long peninsula that is split down the middle by the Mississippi River, surrounded by the Gulf of Mexico and dissected by many canals and bayous. Within the parish are a plethora of lakes and waterways, which serve as a migratory water fowl refuge and estuary for fish, oysters, shrimp, and other seafood. Its location along the lower Mississippi below New Orleans makes it one of the nation's most bountiful seafood, citrus, oil, and gas providers.[1] The legendary "River Road" begins, and ends

[1] *Plaquemines Parish Fair and Orange Festival Annual Fair Booklet*, Sendka Printing, Belle Chasse, Louisiana, 1949, pages 21-27.

in the parish at the mouth of the Mississippi River. According to the 2000 census, the parish had a total area of 2,429 miles, 845 miles of land and 1,584 miles of water. The total area was 65.22% water. The landmass is dwindling due to erosion, subsidence, dredging and the 2005 and 2008 Hurricane seasons.

Much of the nation's "Southern" history, such as LaSalle's claiming of the Mississippi for France in 1682, Iberville discovering the mouth of the Mississippi in 1699, the first fortification on the lower Mississippi, the first non-Indian place name on the lower Mississippi, the first Spanish capital of Louisiana, (and many more), occurred in Plaquemines Parish.[2] From a security standpoint, it has long been known as the Achilles heel to America's heartland. As a result there were nine fortifications, three naval bases, a blimp field, the first joint services naval air station, ten lighthouses, six quarantine stations, a lazaretto, four pilot stations, two wildlife refuges, and many remote towns most of which are now deserted, built on this lower delta.[3]

Plaquemines Parish is semitropical. The land, mostly topsoil washed down from the upper Mississippi River valley, has been ideal for farming. The parish initially was covered by large numbers of cypress and oak trees that were used for ship and home building among other things.

Due to its location on the Gulf of Mexico it has often been ravaged by hurricanes and flooding. They have had a catastrophic effect on historic buildings and artifacts, particularly on the west bank of Plaquemines. The parish was predominately rural farm land with a very metropolitan population because of the river. During the past 85 years, Plaquemines Parish has been severely affected by flooding, erosion, subsidence, hurricanes, depletion of natural resources, and the loss of fisheries, hunting, trapping, marine resources, much of the industry and small businesses, etc. It has also been ground zero for three of the largest hurricanes to strike the Gulf: Hurricanes Betsy (1965), Camille (1967), and Katrina (2005).[4]

Plaquemines had been a wealthy parish during much of the nineteenth century but a collapse in sugar cane prices, as well as several particularly destructive hurricanes and floods, took an economic toll. There were few paved roads, none within 50 miles, when the Lincoln house was built. Things changed in 1932 when Freeport Sulphur Company came into the parish and built a large sulfur mine and a storage facility five miles north of Nairn. After the depression, oil and gas companies accelerated their growth and the west side of the parish experienced a period of unprecedented growth. This growth, though seriously impeded by hurricanes, continued until 2005 when Hurricane Katrina destroyed most of the lower part of the parish.[5]

Transportation was an important part of living in such a long rural parish. From the earliest times until the mid-1950s, river transportation was popular, much like modern day busses. The river packets would make daily stops all along the river picking up people and materials. Their biggest competition was the railroad, which made regular stops along their route also.[6] The railroad went south from

---

[2] Janice P. Buras. *Way Down Yonder, Beginnings On the Mississippi Delta*, Down the Road Publishing, Belle Chasse Louisiana, 1993, Pages 1-27, 41.

[3] Powell A. Casey. *Encyclopedia of Forts, Posts, Named Camps and Other Military Installations in Louisiana*, 1700-1981, Claitor's Publishing Division, Baton Rouge, Louisiana, 1983, Index; and David L. Cipra. *Lighthouses, Lightships and the Gulf of Mexico*, Cypress Communications, Alexandria Virginia, 1997, Pages 131-153; and Buras, pages 3-4.

[4] Rick Jervis, *"Plaquemines Parish can't seem to catch a break,"* USA Today, September 19, 2012.

[5] Ben J. Meyer, Sr., *Plaquemines, The Empire Parish*: LaBorde Printing Co., 1981, Pages 84-87.

[6] Mississippi River Cultural resources Survey, a Comprehensive Study, Phase A, Thematic Historical Overview, U.S.

Algiers, Louisiana, to Buras every morning and returned to Algiers every night. In the early 1930s, LA Highway 23, was a dusty, bumpy gravel road from Venice to Belle Chasse, LA (about 70 miles long) and the only road down the west side of the Mississippi River in Plaquemines Parish.

The Citrus Industry & Family Connection

Plaquemines Parish's semi-tropical weather provided an ideal place to grow citrus. The industry grew slowly before the Civil War.[7] Some of the earliest citrus growers in the parish were Yugoslav immigrants that arrived in 1833, Stephani Cognevich and John Vidacovich. They began a citrus orchard in the rural area near the Nairn plantation, approximately 50 miles downriver from New Orleans. The nearest community at the time was about 15 miles downriver in Buras, Louisiana.[8]

Some families like the Cognevichs established family fruit businesses in New Orleans to market their citrus, but for the most part the industry was not commercialized until after the Civil War when a local wealthy land owner, Bradish Johnson, decided to create a farm with over 100,000 citrus trees just north of the Nairn plantation. To run this mammoth citrus farm, known as "Orange Farm," he hired George Wales Lincoln as its manager in 1871. G.W. Lincoln moved his family to "Orange Farm" and its operation became a family affair. When George W. Lincoln died in 1877, his son George O. Lincoln assumed the job of this highly profitable and well known farm.[9] He remained the manager of the farm until Bradish Johnson died in the 1890's.

George O. and his large family would remain in the area and continue to raise citrus and other crops on his own farm. His eldest son, George Joseph Lincoln married Marie Cognevich, granddaughter of Stephani Cognevich, one of the first citrus farmers in the parish in 1912. George J. and Marie Lincoln, both third generation citrus growers, settled on a section of the Cognevich orange grove, part of the former Nairn plantation, half way between Orange Farm and the original Cognevich citrus farm. This is approximately mile 34 on the river (above Head of Passes) and 50 miles south of New Orleans (60 river miles to the Canal Street Terminal). Marie's father had been elected the Plaquemines Parish Assessor so he let George and Marie operate his small country store and his orange grove. In 1916, Marie's parents sold her and George the orange grove and store. The farm was .5 arpent wide by 40 arpents deep from the river to the swamp. They saved their money to build a small farm house on the property until 1929 when they thought they would have enough to build it. A few days after they took all of their savings out of the bank in New Orleans, there was a run on the banks and the Great Depression had begun. They were fortunate that they had money when few did.

George and Marie had talked to their childhood friend and local contractor, John Edgecombe about building their house before the Depression. As mentioned previously Edgecombe was more concerned with keeping his men employed than making a large profit from the job. Edgecombe agreed to give Lincoln the best house he could for the money if he could work the job to maximize their other work. He assigned his son Elmore to lead the best craftsmen he had to complete the work; it was a win-win for everyone.

Army Corp of Engineers: by National Park Service, May 1984, Page 248.

[7] *Plaquemines Parish Fair and Orange Festival Annual Fair Booklet*: Sendka Printing, Belle Chasse, Louisiana, 1949, Pages 7-9.

[8] Rod Lincoln, "*The Cognevich/Kojnevic Family in America*," *The Deep Delta Genealogical Journal,* Volume III, Issue 10, page 130-146, May, 1985; Published in Buras, Louisiana

[9] *Louisiana Oranges: Orange Farm*, unknown source, article is archived at Tulane University in New Orleans, dated about 1893.

The house survived Prohibition in the early 1930's when smugglers controlled the roads and local political boss Judge Leander Perez controlled local government. It was a turbulent time for the Lincolns and Cognevichs. In the mid 1930's George rebuilt his country store in front but slightly down river from his home but on the same lot. During World War II, unlike most of the rest of the country, Plaquemines Parish suffered the fear of German attack with German submarines sinking ships in its waters. Injured and dead seamen rescued from their burning ships were transported along the roads and river. Blackouts were much more common than most other places in America so houses had to have blackout curtains, etc. About four miles from the Lincoln house was a German Prisoner of War camp. The German prisoners, mostly from the African campaign, were used to clean the levees and ditches across the entire area including those on the Lincoln property.

Post-WWII was a prosperous time for lower Plaquemines Parish. The population increased, the market for citrus increased, and work was abundant. After George J died in 1951, the store was closed and Marie decided she wanted to rent out part of the house just to have someone there in the event of an emergency. She closed off the back of the house adding a small bathroom to the back of the kitchen. Marie remained in the house until her death in 1957. George J. and Marie's youngest son, Hays Lincoln, had been managing the citrus business when his father died so he bought out his brother and sister. He owned the orange grove, the house, and outbuildings. He would rent the house out to long-term renters from 1957 to about 2000. The citrus industry prospered until 1960 when a major freeze wiped out most of the orange trees in the state. The trees were replanted but it takes about 5 years for the trees to bear a commercial crop. Before a good crop of oranges could be raised, Hurricane Betsy hit. Many trees had to be replanted. Then Hurricane Camille hit in 1969 and many growers had to start all over again. Many did, but some couldn't afford the gamble.
Each of these hurricanes caused major destruction across the Louisiana and Mississippi coasts. Most houses in lower Plaquemines were destroyed or significantly damaged by these storms but the George Lincoln house was unscathed. The Lincoln's replanted and actively stayed in the citrus business until Hurricane Katrina. They still have some trees on the Nairn property, but are not currently in retail sales. The old Lincoln store was torn down in the late 1990's.

The Craftsman and Bungalow Style and the George Lincoln House

The Lincoln House's materials of construction, powerful yet simple design, functionality and excellent craftsmanship make it an ideal specimen of the Craftsman Bungalow for South Louisiana during a very turbulent era in American history, the Great Depression and all that followed.

The term bungalow is often used with Craftsman styled houses, but it actually means simply, a small one story house that can be any architectural style. The Lincoln House is a bungalow as it is a one story home. At the time they were constructed, Craftsman bungalows were often referred to as California bungalows.[10] Bungalows originated in India and were simple, low, horizontal and informal houses. They developed as the British colonial government adapted native architectural huts into a series of houses for British travelers. The Hindu term "banglas" eventually became the English word "bungalow." The architectural style itself followed the British soldiers and diplomats home where it later made its way to the United States.[11]

Once in the United States, the bungalow form became popular as a new solution to the problems brought about by the industrial age. Reformers sought a cleaner, quieter, and more efficient mode of

[10] Virginia Savage McAlester. *A Field Guide to American Houses*. New York: Alfred A. Knopf, 2013. Pg. 578.
[11] Patricia L. Duncan. *Louisiana Architecture: A Handbook on Styles*. Lafayette: The Center for Louisiana Studies, 1998. Pg. 65.

housing and found it in the bungalow. The back to nature philosophy, which sought simple pleasures and the quietness of nature, the Arts and Crafts movement, which sought simplicity in home design, and the progressive housing campaign, which sought sanitary and efficient housing with open floor plans, all led to the proliferation of the bungalow as the house of choice for middle class families.[12]

Architects designing bungalows would often look to previous architectural styles to adapt to the smaller house size. While there are bungalows of many styles, the most popular style became Craftsman bungalows. The Greene brothers – Charles and Henry – began designing houses in what became known as the Craftsman style in the first decade of the 20th century. They started off designing large mansions with many intricate Craftsman details. These influential designs were then picked up for use on bungalows. The primary resources for these designs were popular magazines and pattern books. There were even some pattern books that offered precut packages of lumber for your Craftsman bungalow.[13]

This phenomenon eventually made its way to Louisiana and entire neighborhoods of Craftsman bungalows can be found in several cities including New Orleans, Baton Rouge, and Shreveport. Once the style and form arrived here, our vernacular building styles influenced the form even more. Many Louisiana Craftsman bungalows have full width porches to take advantage of as much air flow as possible. Also, the ubiquitous shotgun form found mainly in New Orleans, but in other cities as well, was adapted to the Craftsman style. The Craftsman details were integrated on the exteriors and interiors while maintaining the shotgun floorplan. Other various forms of Craftsman houses are the camelback and the raised basement form.[14] The bungalow form and Craftsman style remained popular through the 1930s. The Great Depression really helped to slow down construction and following World War II, the housing stock looked more towards other types and styles of residences.

A cursory survey via Google street view maps shows a few smaller homes that appear to be of similar age to the Lincoln House on the west bank (of the Mississippi River) of Plaquemines Parish. However, these few examples found are less detailed or have been extensively altered to where their main historic feature is their overall form. The Lincoln house has many more original Craftsman details than the houses seen on the west bank. Furthermore, on a recent windshield survey of the rural areas of the east bank of Plaquemines Parish, there were no other Craftsman bungalows observed other than the Lincoln House. If there were any others left, they were either not visible due to overgrowth or had been altered to a point where they were unrecognizable as a Craftsman bungalow.

Typical characteristics of the Craftsman and bungalow style include low pitched roofs, exposed rafter tails, a porch supported by square columns, columns that continue to ground level, triangular knee braces, grouped windows, and wood clapboard siding. Some Craftsman houses would feature clapboard siding with columns or porches of brick or decorative stone. The Craftsman style can be divided into four subtypes: front gabled roof, cross gabled roof, side gabled roof, and hipped roof. The Lincoln House can be classified as a cross gabled roof as it does have a side projection on the north elevation. It differs from other cross gabled roof Craftsman homes in that the cross gable is not integrated into the front porch structure. Nonetheless, it would still be a cross gable versus a pure front gable as it does have this projection. The Lincoln House has several original and typical feature of the Craftsman style such as a low pitched roof, exposed rafter tails, a porch supported by square

[12] Duncan, pg. 67.
[13] McAlester, pg. 578.
[14] Duncan, pg. 69.

columns that extend all the way to the ground, triangular knee braces in all gable eaves, grouped multi-lite windows, typical multi-lite Craftsman style doors, wood clapboard siding, and interior features such as the built in shelves and book cases with battered columns and typical Craftsman wood panel interior doors.

The Lincoln House stands alone in rural Plaquemines Parish as a well-executed example of a Craftsman bungalow. It retains many of its original, classic features that help it embody the distinctive characteristics of the Craftsman style and thus, remains eligible for listing on the National Register at the local level under Criterion C: Architecture.

Developmental History/Additional historic context information

See above

9. Major Bibliographical Resources

Bibliography (Cite the books, articles, and other sources used in preparing this form.)

Buras, Janice P., *Way Down Yonder, Beginnings on the Mississippi Delta*, Down the Road Publishing, Belle Chasse, Louisiana, 1993.

Casey, Powell A. Casey *Encyclopedia of Forts, Posts, Named Camps and Other Military Installations in Louisiana*, 1700-1981, Claitor's Publishing Division, Baton Rouge, Louisiana 1983.

Cipra, David L. *Lighthouses, Lightships and the Gulf of Mexico*, Cypress Communications, Alexandria Virginia, 1997.

Davis, Dave D. et al, *An Archaeological and Historic Survey of the Lowermost Mississippi River*, Department of Anthropology, Tulane University, New Orleans, Louisiana, 1979

Duncan, Patricia L. *Louisiana Architecture: A Handbook on Styles*. Lafayette: The Center for Louisiana Studies, 1998.

Jervis, Rick, *"Plaquemines Parish can't seem to catch a break,"* USA Today, September 19, 2012.

Lincoln, Rod, *The Lincoln Family Genealogy*. A large collection of materials, interviews and photos of the Lincoln and associated families with emphasis on the Lincoln & Cognevich families.1970-Present

Lincoln, Rod, "*The Cognevich/Kojnevic Family in America*," *The Deep Delta Genealogical Journal,* Volume III, Issue 10, page 130-146, May, 1985; Published in Buras, Louisiana

McAlester, Virginia Savage. *A Field Guide to American Houses*. New York: Alfred A. Knopf, 2013.

Meyer, J. Ben, Sr., *Plaquemines, The Empire Parish*, LaBorde Printing Co., 1981

Mississippi River Cultural resources Survey, a Comprehensive Study, Phase A, Thematic Historical Overview, U.S. Army Corp of Engineers: by National Park Service, May 1984, Page 248.

Plaquemines Parish Fair and Orange Festival Annual Fair Booklet: Sendka Printing, Belle Chasse, Louisiana, 1949,

Unknown author, *Louisiana Oranges: Orange Farm*, unknown source but article is archived at Tulane University in New Orleans, about 1993.

Vujnovich, Milos M., Yugoslavs in Louisiana, Pelican Publishing Company, Gretna, Louisiana, 1974

Much of the specific information on this house for this document came from personal interviews with Hays Lincoln, son of George J and Marie Cognevich Lincoln, and with Elmore Edgecombe, son of the major contractor and one of the initial craftsmen that built the house. Most of the interviews occurred during the period 2006-2008 while house was being renovated.

_____

Previous documentation on file (NPS):

____ preliminary determination of individual listing (36 CFR 67) has been requested
____ previously listed in the National Register
____previously determined eligible by the National Register
____designated a National Historic Landmark
____ recorded by Historic American Buildings Survey #_____
____recorded by Historic American Engineering Record # _____
____ recorded by Historic American Landscape Survey # _____

Primary location of additional data:

__x_ State Historic Preservation Office
____ Other State agency
____ Federal agency
____ Local government
____ University
____ Other
Name of repository: _____

Historic Resources Survey Number (if assigned): _____N/A_____

10. Geographical Data

Acreage of Property: Less than an acre

Latitude/Longitude Coordinates
Datum if other than WGS84:_____
(enter coordinates to 6 decimal places)

1. Latitude: 29.444741 Longitude: -89.616386
2. Latitude: 29.444488 Longitude: -89.616275
3. Latitude: 29.444145 Longitude: -89.616994
4. Latitude: 29.444407 Longitude: -89.617073

Verbal Boundary Description (Describe the boundaries of the property.) The property is in Plaquemines Parish, Louisiana in map T19S R28E, Section 41. The entirety of the lot associated with the house measures 195 feet along the Mississippi River extending approximately 2,060 feet to Parish Highway 11. This includes what is considered lots 36 and 37. At highway 11, only lot 37 continues, approximately 90 feet wide to the 40 arpent line[15] (from the river) or approximately 7,672 feet from the river to the back of the property. In acres, this is approximately 27.72 acres.

The submitted imagery map shows the nominated portion of the property, which is about 1 acre of the entire 27 acres. The nominated portion is the area directly surrounding the house site as shown on the submitted boundary map. The northeast border is Hwy 11, the southeast border is the property line, the southwest border is 100' from the rear elevation of the house, and the northwest border is the property line.

Boundary Justification
Rather than nominate the entire 27 acres of the original French measurement associated with the property, which includes land measuring almost 2 miles back from the Mississippi River, only the area directly surrounding the house site is being nominated. As this is an architectural nomination, it is not significant to include all of the agricultural land associated with the property.

11. Form Prepared By

Name/title: Rod Lincoln
Organization: N/A
Street & number: 103 Oakwood Lane
City or town: Picayune state: MS zip code: 39466
E-mail: rlinc@bellsouth.net
Telephone: 601-799-2594 or 601-916-8076
Date: January 6, 2016

Additional Documentation

Submit the following items with the completed form:

- **Maps:** A **USGS map** or equivalent (7.5 or 15 minute series) indicating the property's location.
- **Sketch map** for historic districts and properties having large acreage or numerous resources. Key all photographs to this map.

[15] This is the original French measurement of the land and the historic boundaries of the property. Virtually all land in Plaquemines was measured in arpents rather than acres and land transactions are still defined by arpents along the river usually with a depth of 40 arpents. However, the Lincoln Citrus grove is on a "building bank" of the river so the actual land is slightly larger due to a growing batture than it was when it was originally surveyed. Since the back 40 arpent line is fixed, the river's movement can either add or take-away property by the river batture. The Lincoln property has almost 3 acres of river batture.

- **Additional items:** (Check with the SHPO, TPO, or FPO for any additional items.)

Photographs

Submit clear and descriptive photographs. The size of each image must be 3000x2000 at 300 ppi (pixels per inch) or larger. Key all photographs to the sketch map. Each photograph must be numbered and that number must correspond to the photograph number on the photo log. For simplicity, the name of the photographer, photo date, etc. may be listed once on the photograph log and doesn't need to be labeled on every photograph.

Photo Log

Name of Property: Lincoln, George, House
City or Vicinity: Nairn
County: Plaquemines
State: Louisiana
Name of Photographer: Jessica Richardson
Date of Photographs: August 28, 2015

1 of 20: Façade; camera facing southwest.
2 of 20: Southeast elevation; camera facing west.
3 of 20: Rear and southeast elevation; camera facing northeast.
4 of 20: Rear elevation; camera facing northeast.
5 of 20: Northwest elevation; camera facing east.
6 of 20: Rear porch; camera facing southeast.
7 of 20: Close-up of northernmost porch column; camera facing north.
8 of 20: Close-up of southernmost porch column; camera facing southeast.
9 of 20: View looking towards the living room from the dining room; camera facing east.
10 of 20: View from the living room, front bedroom is on the left, dining room is straight ahead, and rear hallway and bedroom are visible through the far doorway; camera facing south.
11 of 20: View of the inside of the front door showing original door, transoms, and sidelights; camera facing northeast.
12 of 20: View from dining room looking towards rear hallway and bedroom; camera facing southwest.
13 of 20: View in kitchen looking towards rear door, former pantry to the right and new cutout to the rear hallway to the left; camera facing southwest.
14 of 20: View from kitchen looking towards dining room; camera facing northeast.
15 of 20: Rear bedroom; camera facing south.
16 of 20: Close-up detail of original hardware on bathroom door.
17 of 20: Detail of transom over bathroom door.
18 of 20: View of closet in front bedroom; camera facing southwest.
19 of 20: View from front bedroom (closet to left) into the middle bedroom, door to living room at right; camera facing southwest.
20 of 20: View of triple windows in front bedroom along the façade; camera facing northeast.

FIGURES

Figure 1. Lincoln House in December 1959 (right). In the middle is the George Lincoln General Store and the building to the far left is the barn for Louisa Farm (located next door). Highway 23, an orange tree, and railroad track in the fore ground. The highway and the George Lincoln House are all that remains. Image courtesy of Rod Lincoln.

Figure 2. George J. Lincoln sitting on his front porch in 1949. The large porch handrails were popular benches for family and visitors. Image courtesy of Hays Lincoln.

Figure 3. The Lincoln House in 1993. Image courtesy of Rod Lincoln.

Figure 4. The Lincoln House in 1985. Image courtesy of Rod Lincoln.

Figure 5. Photo from 1942 facing the northeast corner. Notice the large windows with screens. The screens are no longer extant and a simple wooden handicapped ramp has been added in this location. The Lincoln General Store can be seen in front of the house. Image courtesy of Rod Lincoln.

Figure 6. 1931 photograph, the earliest known photo of the house. This shows the original configuration before the back porch was screened in (the screening has since been removed but the framing for the screens remains). Image courtesy of Rod Lincoln.

Figure 7. 1932 photograph of the rear and side elevation showing the rear porch once the screening had been installed. The screening has since been removed, but the original framing and door remain in place. Image courtesy of Rod Lincoln.

Figure 8. The Lincoln House in 2006. Notice the concrete structure on the right corner of the house. This was the cistern support. To the right of that are the steps that went onto the back porch. The house was still off its piers when this photo was taken. Image courtesy of Rod Lincoln.

Figure 9. 2015 image of the Lincoln House. The original forest green accent paint color was changed to light blue. Image courtesy of Rod Lincoln.

Figure 10. 1990 photograph of the original fireplace located between the living room and the middle bedroom. It was destroyed when the house was lifted off its piers during Hurricane Katrina. Image courtesy of Rod Lincoln.

Figure 11. More than a year after Hurricane Katrina the George Lincoln house was still off its piers waiting for workers to help set it back. Two of its three columns on the front were intact. Surprisingly the porch overhang maintained its integrity. Image courtesy of Rod Lincoln.

Figure 12. 2006 photo from the front (east) of the house showing the original piers and how much the house floated from its original location. Image courtesy of Rod Lincoln.

Figure 13. 2009 photograph taken from inside the front door facing slightly south towards bedroom door (far left). A built in book shelf is noticeable in the center. The door in back right of photo goes into the hall where two bedrooms and a bath connect to a small hall to back door. The sheet rock had been peeled off exposing solid cypress walls. Image courtesy of Kerry Lincoln.

Figure 14. 2009 photograph Shot from front door looking northwest. The two built-in book shelves are in the foreground. In the back left corner the rear entrance is visible down the hall. The door in the back right is the door to the kitchen/dining room. Image courtesy of Kerry Lincoln.

Figure 15. 2009 photograph of the Lincoln House. To the left is the back of a built in book shelf and to the right is the door into the hall from the Living Room. This hole was previously where a fireplace was located between the Living Room and the middle bedroom. The chimney was damaged when the house floated during hurricane Katrina and had to be removed. Image courtesy of Kerry Lincoln.

Figure 16. 2009 photograph taken from the kitchen door into the Living Room towards the front door (just left of center in background). The green “boxes” are the backs of the two built-in book shelves. Notice that even the ceiling is made of cypress planks. Image courtesy of Kerry Lincoln.

Figure 17. 2009 photograph in the kitchen facing east where the second fireplace was located. The light colored wood was used to fix the walls in the 1940's when this fireplace was removed and a modern stove was installed in the space. Image courtesy of Kerry Lincoln.

Figure 18. 2009 photo showing the back bedroom. This room was used for staging much of the cypress and hardware during renovation. To the left are two doors. The closest to the window was a closet. The more distant from the window was the entry door from the back hall. The west facing wall has a window looking onto the back porch. The wall behind the photographer is just a long blank wall running parallel with the hall. Image courtesy of Kerry Lincoln.

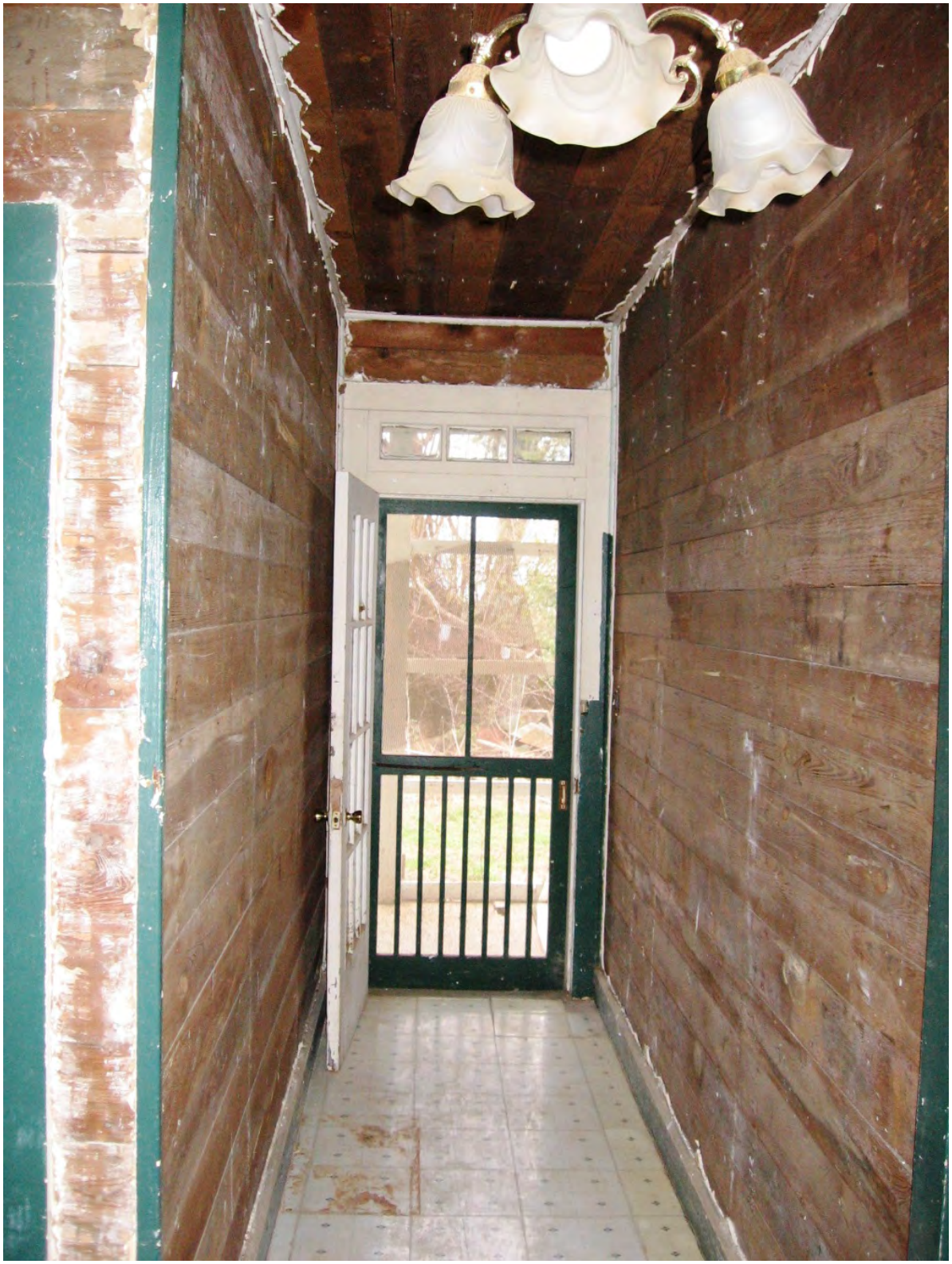

Figure 19. 2009 photo showing the back hall to the outside porch. The kitchen is to the right and bedroom 3 is to the left. Image courtesy of Kerry Lincoln.

Figure 20, 2009 photo facing east from back hall looking through the middle and front bedrooms. The white open door is a closet. Each bedroom has one closet. Image courtesy of Kerry Lincoln.

Figure 21. 2009 photo of front bedroom facing east. Door to left goes into Family room. Front porch is just beyond windows. Image courtesy of Kerry Lincoln.

Figure 22. 2009 photo showing the center bedroom facing southwest. Door to the right goes into hall. Image courtesy of Kerry Lincoln.

Figure 23. 2009 photo showing the attic opening in the back hall. Image courtesy of Kerry Lincoln.

Figure 24. 2009 photo showing the inside of the front door. Image courtesy of Rod Lincoln.

Lincoln, George, House - Plaquemines Parish, LA

Latitude: 29.444449 Longitude: -89.616697

Lincoln, George, House - Plaquemines Parish, LA

Latitude: 29.444449 Longitude: -89.616697

The full extent of the 27 acre property goes from the river all the way back into the bayou. Only the immediate acreage, less than an acre, surrounding the house is being nominated. See imagery map for width of the property.

Lincoln, George, House
Plaquemines Parish, LA
Boundary and Exterior Sketch Map
Boundary
1
2
3
4
5
6
Hwy 11
1. Latitude: 29.444741 Longitude: -89.616386
2. Latitude: 29.444488 Longitude: -89.616275
3. Latitude: 29.444145 Longitude: -89.616994
4. Latitude: 29.444407 Longitude: -89.617073
Google earth
© 2016 Google
N
300 ft

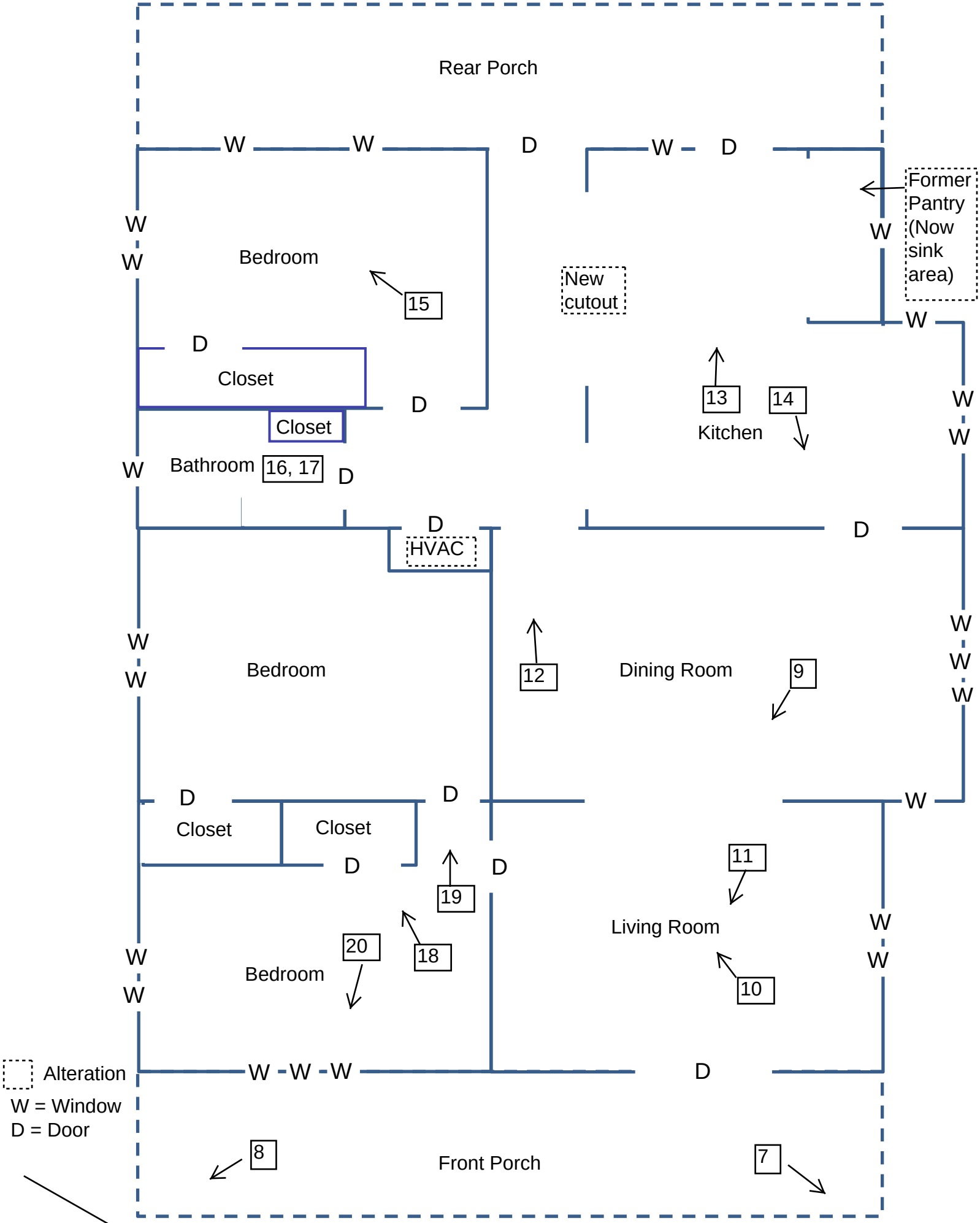

Lincoln, George, House - Plaquemines Parish, LA
Interior Sketch Map

30784

STERLING

Louisiana Creole
TOMATOES

Trash Bags
Crisco