United States Department of Interior
National Park Service

Otter Point Restoration/ Environmental Assessment

Lewis and Clark National Historical Park, Astoria, Oregon

This Otter Point Restoration Environmental Assessment analyzes two alternatives, the No Action alternative (Alternative 1) and Active Restoration of Tidal Wetlands (Alternative 2). Alternative 1 would not change the existing approach to wetland restoration planning and implementation. In contrast, to address degraded tidal wetlands, Alternative 2 proposes appropriate active restoration methods to adhere to the goals set by the June 1995 General Management Plan, as well as the 2008 Biological Opinion for the Federal Columbia River Power System. This proposed alternative will provide the Lewis and Clark National Historical Park staff with an appropriate active approach to addressing tidal wetland restoration at Otter Point.

Public Comment: If you wish to comment on the proposed Otter Point Restoration, you may mail comments to Otter Point Restoration, Lewis and Clark National Park, 92343 Fort Clatsop Road, Astoria, Oregon 97103. You may also hand deliver comments to Lewis and Clark National Park, 92343 Fort Clatsop Road, Astoria, Oregon 97103.

Before including your address, phone number, e-mail address, or other personal information in your comments, please be aware that your entire comment, including your personal identifying information, may be made publicly available at any time.

Once public comments are received and considered, it is anticipated that a Finding of No Significant Impact would be produced that addresses substantive public comments and identifies the alternative selected, and mitigations which would be included.

TABLE OF CONTENTS

COVER SHEET..... i

INTRODUCTION..... **1**

Purpose..... 3
Need..... 3
Other Project Goals..... 3
Project Background..... 4
Cultural Resources Restoration..... 4
Biological Opinion..... 6
Restoration Efforts..... 7
Wetland Statement of Findings..... 8
Section 408 Process..... 8
Impact Topics..... 9
Issues and Impact Topics Included for Analysis..... 9
Issues Eliminated from Further Analysis..... 10
Scoping..... 11
Planning Issues and Concerns..... 11

RESTORATION ALTERNATIVES..... **13**

Descriptions of Reasonable Alternatives..... 13
Screening Criteria and Included Restoration Actions..... 13
Technical Feasibility..... 13
Alternative 1: No Action..... 14
Alternative 2: Active Restoration of Tidal Wetlands at Otter Point..... 15
Other Alternatives Considered but Eliminated..... 20
NPS Preferred Alternative..... 20
Environmentally Preferred Alternative..... 21
Mitigation..... 23

AFFECTED ENVIRONMENT..... **24**

Physical Environment..... 24
Geology..... 24
Water Quality..... 25
Hydrology..... 25
Vegetation..... 25
Soils..... 26
Fish and Wildlife..... 26

Threatened and Endangered Species....27
Historic and Cultural Resources.... 31
Visitor Use and Experience.... 32
Land Use....32

ENVIRONMENTAL CONSEQUENCES....34

Analysis Approach.... 34
Approach for Evaluating Alternatives....34
Impacts and Effects.... 35
Impairments.... 36
Geology.... 36
Alternative 1- No Action....37
Alternative 2: Active Restoration of Tidal Wetlands at Otter Point....37
Water Quality....39
Alternative 1- No Action.... 39
Alternative 2: Active Restoration of Tidal Wetlands at Otter Point....39
Hydrology....41
Alternative 1- No Action....41
Alternative 2: Active Restoration of Tidal Wetlands at Otter Point....41
Vegetation....42
Alternative 1- No Action.... 42
Alternative 2: Active Restoration of Tidal Wetlands at Otter Point....43
Soils....44
Alternative 1- No Action....45
Alternative 2: Active Restoration of Tidal Wetlands at Otter Point....45
Fish and Wildlife....45
Alternative 1- No Action.... 46
Alternative 2: Active Restoration of Tidal Wetlands at Otter Point....46
Threatened and Endangered Species.... 47
Alternative 1- No Action....48
Alternative 2: Active Restoration of Tidal Wetlands at Otter Point.... 48
Historic and Cultural Resources.... 48
Alternative 1- No Action.... 49
Alternative 2: Active Restoration of Tidal Wetlands at Otter Point.... 50
Visitor Use and Experience....50
Alternative 1- No Action.... 51
Alternative 2: Active Restoration of Tidal Wetlands at Otter Point.... 51
Land Use.... 52
Alternative 1- No Action.... 52
Alternative 2: Active Restoration of Tidal Wetlands at Otter Point.... 52

CONSULTATION AND COORDINATION.....54

The Scoping Process..... 54
Agency and Tribal Consultation and Coordination..... 54
U.S Fish and Wildlife Service and Coordination..... 54
Army Corps of Engineers..... 54
Oregon Department of State Lands……..... 54
Youngs Bay Watershed Council.....54
Region State and Tribal Historic Preservation Officers.....55
City of Warrenton, Oregon.....55
Supporting Compliance….....55
Distribution List..... 56
List of Preparers and Contributors..... 57

REFERENCES.....58

LIST OF TABLES

Table 2-1. Restoration Actions Evaluation Table..... 14
Table 2-2. Comparison of Impacts to the Alternatives.....22
Table 2- 3. Summary of Alternatives Considered..... 23

LIST OF FIGURES

Figure 1-1. Otter Point Project Location..... 1
Figure 1-2. Aerial View of Otter Point Project Site.....2
Figure 1-3. Restoration Projects on the Lewis and Clark River.....7
Figure 2-1. Existing Otter Point Conditions Map..... 15
Figure 2-2. Otter Point Alternative 2 Conceptual Map.....16
Figure 2-3. Proposed Topographic Diversity at Otter Point Restoration Site.....18
Figure 2-4. Proposed Planting Plan for Otter Point Restoration Site..... 19
Figure 4-1. Project Design for Excavated Channels and Large Wood Placement at Otter Point Restoration Site..... 38
Figure 4-2. Project Design for Constructed Enhanced Levee and Bioswale at Otter Point Restoration Site.....40
Figure 4-3. Project Design for Revegetation of the Otter Point Restoration Site.....44

LIST OF APPENDICES

Appendix A. Otter Point Project Designs
Appendix B. Scoping Meeting Invitation Letters

INTRODUCTION

Lewis and Clark National Historical Park is comprised of 12 sites along 40 miles of the Pacific Coast in Oregon and Washington. Otter Point is located within the Fort Clatsop site along the Lewis and Clark River.

This site was added to the National Park System in 2002, under the authority of the 2002 Fort Clatsop Memorial Expansion Act. The purpose of this acquisition was to implement the park's 1995 General Management Plan/Environmental Impact Statement (EIS).

Figure 1-1. Otter Point Project Location

Figure 1-2. Aerial View of Otter Point Project Site

Purpose

The National Park Service (NPS) proposes to work with Clatsop Diking District 11 (District), the Bonneville Power Administration, the US Army Corps of Engineers (USACE) and other partners to restore salmon habitat, freshwater wetlands, and the historic landscape at a location known as Otter Point within Lewis and Clark National Historical Park.

At the time of the Lewis and Clark Expedition, the site of Fort Clatsop was a hill above the river surrounded by tidal marsh on both the north and south. These tidelands were diked in the 19th and early 20th centuries and converted from wetland to pastureland. In 1995, the park worked with partners and the public to complete a General Management Plan/Environmental Impact Statement. This plan recommends restoring diked pasturelands to tidal wetland by modifying dikes, where feasible. The area south of the Fort Clatsop hill, called South Clatsop Slough, was restored to tidal slough and wetland in 2007. Otter Point, the subject of this project, is north of the fort hill. Completing this project would re-create the historic riverine setting of Fort Clatsop.

A second purpose of this project is to restore historic salmon habitat in the Columbia River estuary. The Otter Point Restoration Project will not only improve salmonid habitat within the wetland site itself, it will also have cumulative benefits as part of a larger-scale effort to improve the habitat value and overall function of the Lewis and Clark River basin. Several projects have already been completed on the Lewis and Clark River including 2 dike breaches further upstream on City of Seaside property, and the South Clatsop Slough wetland restoration located within the Lewis and Clark National Historical Park immediately upstream from Otter Point. The South Clatsop Slough restoration project showed that juvenile salmon return to wetlands in the Lewis and Clark basin immediately after tidal barriers are removed. Together these projects create more contiguous salmonid habitat and help improve the overall water quality of the river.

Need

This project is needed now to help the Federal government satisfy its legal responsibility to restore anadromous fish in the Columbia River Basin. The 2008 Biological Opinion for the Federal Columbia River Power System (2008 Bi-Op) requires the federal government to take actions to restore salmon throughout the Columbia River basin, when feasible.

Though this project has been contemplated since 1995, federal funds were not available for design and compliance until the completion of 2008 Bi-Op and a corresponding legal obligation.

Other Project Goals

In addition to restoring the historic conditions of Fort Clatsop and anadromous fish habitat, flood protection is a major objective of this project. Restoring Otter Point would require realigning the levees within the national park. These levees are part of a flood control system built by the US Army Corps of Engineers and operated and maintained by Clatsop

Diking District 11. USACE requires that the realigned diking system provides the same flood protection for which it was designed.

Improved drainage is also an important factor that was taken into consideration when developing the Otter Point project. This project will allow NPS and Diking District 11 to work together to replace and improve drains and tide gates in the project area and to solve longstanding drainage problems on lands served by the drainage works.

No undue burden to local communities was another major objective NPS included in the development of the Otter Point project design. The Federal Emergency Management Agency (FEMA) plans to issue new floodplain maps and designation in the coming months. These maps might redefine the areas protected by federal flood insurance, leaving many properties without protection. Solving this problem might require improvements to the regional levee system, of which the park is a part. It is our goal to put in place mechanisms, such as legal agreements and commitments, to assure that levees within the national park are not the reason for changes to floodplain maps or flood insurance requirements.

Project Background

The park desires to complete the Otter Point Restoration project in order to meet the goals of the General Management Plan/ EIS, as well as the 2008 Bi-Op. In doing so, the park will achieve common goals for cultural restoration, salmon recovery and preservation of watershed health.

Cultural Resources Restoration

Fort Clatsop National Memorial, the precursor to today's Lewis and Clark National Historical Park was originally created by congress to "commemorate the culmination, and the winter encampment of the Lewis and Clark expedition" (Deur 2008:1). This mandate helps to define the park's natural and cultural resource planning objectives. As a historically zoned park, the park's landscape has been defined as a "cultural landscape" under NPS Management Policies. These policies call, among many other things, for the management of the landscape to reflect the scene that prevailed during the historic period. In the case of Lewis and Clark National Historical Park, that "historic period" is principally defined as the time of the Lewis and Clark Expedition, in the winter of 1805-06. Park managers are thus compelled to recreate, to the extent possible, landscape features, and plant and animal communities comparable to those found there in 1805-06 as they undertake major restoration projects of the sort now considered at Otter Point (NPS 1995). With landscapes restored to their original condition, visitors are able to envision the experiences of the Corps of Discovery more clearly. Moreover, the landscape, itself, becomes an interpretive medium in this context, with park staff using key landmarks and habitats as part of their ongoing retelling of the Lewis and Clark story to park visitors (Deur 2008:1).

The journals of the Lewis and Clark Expedition refer to "extensive marshes" at the place chosen to build Fort Clatsop, encompassing a high point that projected into the estuary. Clark noted that the Fort was built on

> "the first point of high land on the West side…this situation is on a rise about 30 feet higher than the high tides…this is certainly the most eligeable Situation for our purposes of any in its neighborhood" (Clark in Moulton 1990: 114).

Maps in the journals clearly show the fort in a point protruding into the Lewis and Clark River between two broad wetland areas sitting just north and south of the point, sited adjacent to the small spring-fed stream emptying between Otter Point and the fort site. Visiting the site a few years after Lewis and Clark's departure, Astorian Robert Stuart complained that Fort Clatsop was "very disagreeably situated, being surrounded with swamps and quagmires" (Spaulding 1953: 28). The prevalence of shallow salt marshes immediately north and south of Fort Clatsop contributed to that site being rejected in favor of the modern-day site of Astoria by Stuart and his fellow fur traders, who envisioned a day when big ships would regularly visit their tradition post (Deur 2008:3).

The site originally chosen for the construction of Fort Clatsop, then, can be thought of as a promontory – almost a peninsula – jutting out into tidal wetlands extending north and south, with open water to its east. For the Lewis and Clark Expedition, this point would have been defensible, accessible by water, and characterized by commanding views of waterborne traffic along Lewis and Clark River as well as of landmarks like Saddle Mountain. Available U.S. Coast Survey maps from the 1870s suggest that this marsh was probably almost impassable by foot, being dissected by meandering, dendritic tidal channel networks, with expanses of mud flats and patchy, salt-tolerant scrub-shrub margins (U.S. Coast Survey 1876). During extreme high water events, the visual appearance of this point as a "peninsula" jutting out into the tidelands would have been especially pronounced. The sharp upland-wetland interface would have been a clearly discernible shoreline during high tide events, and opened to a salt marsh meadow during moderate to low tides (Deur 2008:3).

This location was chosen for a variety of reasons that are fundamental to aspects of the Lewis and Clark story that are interpreted to the public today, such as its defensibility and its access to water. Yet, the look of the cultural landscape has been largely lost due to diking of the marshes and the establishment of shrubs, trees, and other vegetation along the diked shoreline. The shoreline now appears relatively straight and uniform, rather than being a deeply indented series of points and tidal marshes. Moreover, the distinct natural shoreline, along the upland-wetland interface, has been dramatically impacted by the historical construction of the county road along the tidewater edge. The landscape reveals little to park visitors as to the historical condition of the shoreline, or of the attributes of the site that made it appealing to the Lewis and Clark Expedition (Deur 2008:3).

A review of the relevant planning documents at the park demonstrates this consistent attention to the restoration of historic vegetation and scenic conditions. The look of the landscape is key, and "viewsheds" from visitor facilities are identified as some of the "primary features contributing to the cultural landscape" (NPS 1995: 75). For these reasons, dike removal and wetland restoration has been supported by the park. "Water and wetland

resources are a significant part of the historic scene at the encampment site" (NPS 1995: 75). Park planners thus have recommended protecting or enhancing wetlands in the park, as much to maintain the "historic scene," as to meet the park's other compliance mandates. Planners have consistently noted that most of the wetlands in Fort Clatsop have been altered by diking, however, and so wetland restoration in the park would often require more than simple hydrological fixes – instead, this restoration would require the reconstruction of entire wetland landscapes, perhaps to their early 19th century condition (Deur 2008: 3).

Based on the Preliminary Cultural and Historical Assessment conducted in 2008, project designers were recommended to:

1) Restore, to the extent possible, the open salt marsh landscape and associated channel morphology that will, in turn, accentuate the promontory of the Fort Clatsop site from the vantage point of current or proposed visitor access (Deur 2008: 5).
2) Restore, to the extent possible, the historical shoreline along the upland-wetland interface through such actions as road decommissioning and contouring at the conclusion of restoration earthwork (Deur 2008: 5).
3) Retain, where possible, visual barriers from points of current or proposed visitor access, so that the development north and northeast of the park is shielded from view, but landmarks from Saddle Mountain southward are equally or more visible than today (Deur 2008: 5).

In addition to historic vegetation and scenic conditions, NPS management policies also call park managers to preserve and restore animal communities comparable to those found during the 1805- 1806 Corps of Discovery encampment of Fort Clatsop. Upon arrival at the Pacific Coast, Lewis and Clark chose to camp at the Fort Clatsop site, in part, because of the abundant supply of elk found in the region. Resident elk herds sustained the Corps of Discovery throughout their winter encampment, and allowed them to replenish their depleted supplies.

Currently, 2 herds of Roosevelt elk utilize the Otter Point wetland as seasonal habitat. Preserving the native willow and upland spruce habitat of this historically important species, is considered part of maintaining the historic conditions of the park.

2008 Biological Opinion

In 2008, The Bonneville Power Administration was required by law to enter into an agreement with the Army Corps of Engineers, Department of the Interior, several tribes, and other government agencies to partner together to implement projects that benefit Columbia River Basin salmon over a ten year period. The Biological Opinion includes an Implementation Plan that outlines a comprehensive program of habitat improvements, hatchery reforms and hydrosystem operations and improvements to protect Columbia and Snake River fish. The plan outlines a broad array of projects to improve spawning and rearing habitat to boost the survival rates of fish listed under the Endangered Species Act. One of the key methods recommended for improving rearing habitat within the document is dike breaching. The Biological Opinion also states that Federal agencies are required to

comply with the recommendations of the document unless there is valid evidence as to why restoration efforts cannot be executed.

Restoration Efforts

Restoring the Otter Point wetland will not only improve the cultural landscape of the park and help to restore salmon populations in the Columbia River Basin, it will also have cumulative benefits as part of a larger-scale effort to improve the habitat value and overall function of the Lewis and Clark River. Several projects have already been completed on the Lewis and Clark River including a wetland restoration immediately upstream from Otter Point, also within the park (See Figure 1-3). This restoration project, entitled the South Clatsop Slough Restoration, was completed in 2007 and entailed reconnecting 45 acres of historic pasture with the Lewis and Clark River by replacing a failing tide gate with a bridge to reestablish tidal connection. Post-project fish presence surveys at the South Clatsop Slough site have indicated a 10-fold increase of juvenile salmonids utilizing the wetland habitat.

Further upstream on the Lewis and Clark River, in 2006, the City of Seaside breached 2 dikes on their property, effectively reconnecting 25 acres of wetland with the mainstem of the river. Together, these projects increase the habitat benefit for Lower Columbia River salmonids by providing contiguous off-channel refugia within the same river basin.

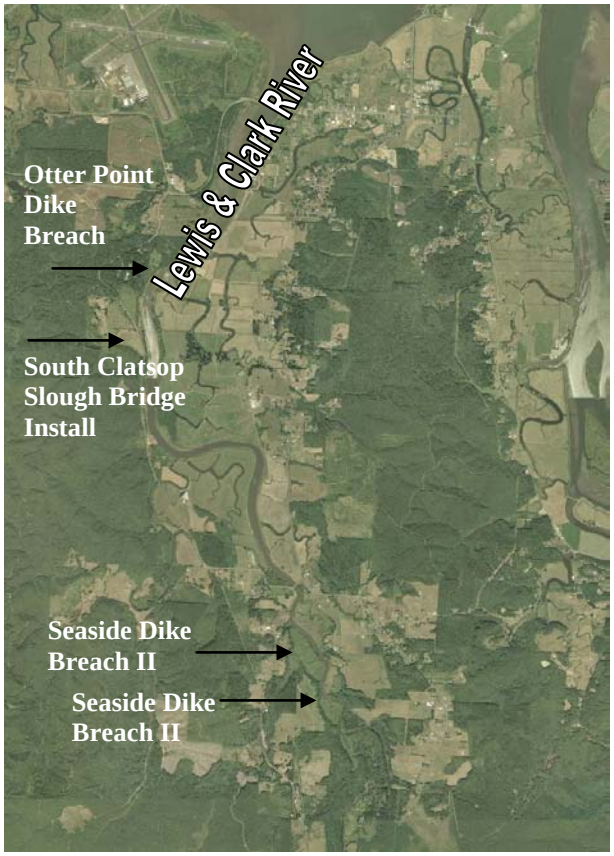

Figure 1-3. Restoration Projects on the Lewis and Clark River

In addition, to the cumulative restoration efforts within the Lewis and Clark River Basin, these individual restoration projects are part of an even larger scale effort to restore salmon habitat and floodplain function within the Youngs Bay Watershed, and greater yet the Columbia River Estuary. Numerous projects have been accomplished over the past decade to improve fish passage to upstream spawning and rearing habitat, restore off-channel refugia, and improve the quality of instream habitat and riparian condition.

Examples of projects recently completed within the Youngs Bay Watershed include a 2006 project on the Walluski River that restored 4,800 feet of stream by placing 295 pieces of large woody debris within the river for in-stream habitat complexity. Also, during the 2008-2009 planting seasons, the Youngs Bay Watershed Council utilized grant funding to replant over 6 acres of riparian area on the North Fork Klaskanine River.

Examples of recently implemented projects within the Columbia River Estuary include a 2002 project on Blind Slough to reopen fish passage by replacing 2 undersized culverts with 5 60- inch culverts; as well as a 2008 project on the Alderbrook Slough to remove invasive plants and revegetate the slough with native wetland plants.

Wetland Statement of Findings

According to National Park Service Procedural Manual #77 – 1: Wetland Protection, the Otter Point Restoration project is an "exception" to the required Wetland Statement of Findings. Defined in the Procedural Manual actions designed specifically for the purpose of restoring degraded natural wetland, stream, riparian, or other aquatic habitats or ecological processes are exceptions and therefore exempt.

Section 408 Process

Section 408 regulation authorizes the Secretary of the Army to permit alterations/ modifications to existing U.S. Army Corps of Engineers (USACE) projects in certain circumstances. The types of projects that require approval by the Chief of Engineers include degradations, raisings, and realignments, such as the proposed Otter Point Restoration. The Section 408 process involves risk analysis to determine whether the project will result in "adverse impacts" that will increase risk to public safety. Variables in a risk analysis include geotechnical and structural analysis, as well as evaluation of hydraulic and hydrologic parameters. USACE has provided technical guidance for this process in the EM 1110-2-1619 document, but has yet to fully develop the guidance needed to analyze risk and uncertainty for the geotechnical and structural performance of a system. Until such guidance is developed, deterministic procedures are appropriate for demonstrating geotechnical and structural integrity under full range loading conditions (U.S. Army Corps of Engineers 2008).

Required documents for the Section 408 review include a geotechnical evaluation, structural analysis, hydraulic and hydrologic analysis, operations and maintenance requirements, real estate analysis, discussion of residual risk, administrative record for key decisions, discussion

of Executive Order 11988 Considerations which include justification to construct in a floodplain, and environmental protection compliance. After a complete application is submitted, it is subject to an Agency Technical Review, as well as a Type II Independent External Peer Review for Safety Assurance (U.S. Army Corps of Engineers 2008).

Impact Topics

In addition to the impact topics analyzed in this document, other project components were discussed during the external scoping process for the Otter Point Restoration Project. Topics discussed during the project scoping meetings included post-construction effectiveness monitoring, acknowledgment of existing easements and maintenance responsibilities of realigned enhanced levee.

Questions and concerns related to these topics were addressed by NPS staff during the scoping meetings. The active restoration alternative (Alternative 2) incorporates extensive post-construction effectiveness monitoring into the restoration plan. Long-term monitoring would be a collaborative effort between NPS, the Columbia River Estuary Study Taskforce and Astoria High School students. The monitoring plan would include fish presence surveys, plant community surveys, water quality analysis, and topographic surveys to track channel morphology. Post-project monitoring data would be compared to data recorded prior to completion of active restoration methods to determine long-term impacts at the site.

All existing easements located within the Otter Point project site will be upheld under both Alternative 1 and Alternative 2. Existing easements include the Diking District 11 management easement and the Power and Light maintenance easement for the utility poles that transect the Otter Point site. Under the active restoration alternative, the diking district easement on the levee proposed for breaching would be nullified by the alteration activities. However, the easement would be transferred to the realigned enhanced levee, and the enhanced levee will become part of Diking District 11.

Maintenance of the realigned levee will remain under the jurisdiction of Diking District 11. However, NPS will actively partner with the diking district to maintain the levee as specified in the NPS- Diking District 11 Memorandum of Understanding.

Issues and Impact Topics Included for Analysis

The impact topics that have been included in this assessment are:

Physical Environment (geology, water quality, hydrology, vegetation and soils)—The park's physical resources are key components of the its environment, and are essential to the health of the Otter Point wetland system. Changes to the physical environment could potentially affect biological and physical components of the wetland, and the organisms that inhabit it. The alternatives and restoration methods analyzed in this environmental assessment may affect the physical environment of the wetland ecosystems, specifically geology, water quality, hydrology, vegetation and soils. The analysis described in this assessment considers the impacts of both of the alternatives on these physical components of the wetland system.

Fish and Wildlife (Roosevelt Elk) — Native wildlife species are an integral part of the park's environment. It is the park's purpose to protect these resources, and therefore important to identify and analyze any potential impacts (adverse or beneficial) that could affect these resources. The alternatives and restoration methods analyzed in this environmental assessment may affect the biological and natural resources of the wetland system, specifically the Roosevelt Elk herd that seasonally inhabits Otter Point. The analysis described in this assessment considers the impacts of each of the alternatives on fish and wildlife species within the Lewis and Clark National Historical Park.

Threatened or Endangered (T&E) Species (coho salmon, Chinook salmon, chum salmon, and steelhead trout)—The NPS Management Policies require that potential effects of agency actions on federal, state, or locally listed species be considered. NPS is required to control access to important habitat for such species and to perpetuate the natural distribution and abundance of these species and the ecosystems upon which they depend. The analysis described in this assessment considers the impacts of each of the alternatives on T&E habitat and species within the Lewis and Clark National Historical Park.

Historical and Cultural Resources—Through legislation, the NPS is charged with the protection and management of historical and cultural resources in its custody. Impacts to these resources therefore are identified and analyzed in this document.

Recreation and Visitor Experience—The NPS Management Policies state that the "enjoyment of park resources and values by the people of the United States is part of the fundamental purpose of all parks" (NPS 2006). Aesthetics is considered part of the visitor experience. Maintaining scenery of great natural beauty is a key component in enhancing visitor experience. Analysis of all potential impacts to recreation and visitor experience, including aesthetics, is provided in this document.

Land Use— The NPS DO-12 Handbook requires an analysis of impacts due to land-use conflicts between the proposed action and land-use plans in the affected area. The project area is entirely within the boundaries of the Lewis and Clark National Historical Park; however, it does have the potential to impact non-NPS lands. Since the proposed action could create a land-use conflict, it was analyzed in this assessment.

Issues Eliminated from Further Analysis

NEPA and the CEQ regulations direct agencies to "avoid useless bulk and concentrate effort and attention on important issues" (40 CFR 1502.15). Resource issues judged irrelevant to the proposed actions or the alternatives considered in this environmental assessment are listed below along with the reasons they were eliminated.

Socioeconomics— NEPA requires an analysis of impacts to the "human environment," which includes economic, social, and demographic elements in the affected area. Because many Clatsop County residents use the park for recreational purposes, they would directly benefit from the restoration of park habitats to their historic natural condition. The cost of the restoration actions would not be enough to create a significant number of jobs for Clatsop County residents. The alternatives would not significantly impact fishing practices

on the Lewis and Clark River. Furthermore, the proposed restoration activities would not affect socially or economically disadvantaged populations. As a result, this issue is not included for further analysis in this environmental assessment.

Environmental Justice— Executive Order (EO) 12898, Federal Actions to Address Environmental Justice in Minority Populations and Low Income Populations, requires all federal agencies to identify and address disproportionately high and adverse human health or environmental effects of their programs and policies on minorities and low-income populations and communities. Wetland restoration projects at the Lewis and Clark National Historical Park are expected to have no direct or indirect impacts on minority or low-income populations or communities. Environmental justice considerations, therefore, were not included for further analysis in this environmental assessment.

Scoping

Internal and external scoping occurred prior to preparation of this environmental assessment. Internal scoping involved an interdisciplinary process to identify issues, alternatives, and data needs. The project planning team held several internal scoping meetings at the park in 2010.

External scoping included coordination with interested federal and state agencies along with associated Indian tribes. Scoping letters were sent to associated Indian tribes, resource and regulatory agencies, interest groups, and the public (See Appendix B).

The public was also given the opportunity to comment and provide feedback throughout development of the environmental assessment. Scoping letters were sent in June 2010 to local, state, and federal regulatory and resource agencies; interested citizens; tribes; and other organizations. A press release was issued in June 2010 describing the project and announcing the June 24, 2010 public meetings.

Planning Issues and Concerns

Additional issues related to land use planning, drainage and flooding were considered throughout the design phase of this project. Management actions taken by NPS are expected to be conducted in such a manner as to create no negative impact on the land use and value of adjacent properties. These issues were analyzed in this assessment and were incorporated within the selection of an alternative and finding of no significant impact. All of the alternatives analyzed that involve alteration of the existing dike structure are subject to the Army Corps of Engineers Section 408 process. By adhering to the regulations set by the Army Corps of Engineers in partnership with FEMA, NPS is ensuring that all flood protection structures that are altered in this process will provide flood protection that equals that which currently exists at the Otter Point wetland site.

Several additional questions regarding the existing and proposed conditions of the Otter Point wetland were discussed at the scoping meetings held on June 24, 2010. Results of the meetings determined that the existing management easement with Diking District 11 on NPS property will be honored following a levee realignment. However, NPS will draft a

Memorandum of Understanding with Diking District 11 pledging maintenance assistance of the levee and tide gates on their property. In addition to the Diking District easement, there is also a Pacific Power and Light maintenance easement for the utility poles that transect the wetland site. The conditions of this easement will not change due to implementation of restoration actions at the Otter Point site.

Scoping meeting attendees also discussed questions regarding aspects of the proposed restoration project design. For example, restoration at the project site will involve installing a new culvert and tide gate in the northwestern corner of the property under the realigned levee, in addition to replacing the existing culvert and tide gate in the northeastern corner of the property. The addition of another culvert and tide gate is to ensure that the goal of no negative impacts to adjacent property is met by providing additional drainage to the neighboring pasture. Also, the proposed restoration designs specify excavating two separate stream channels instead of connecting the channels into a single network. Designs were created in this manner because NPS desires to recreate the historic conditions of the wetland site. LiDAR data as well as ground surveys revealed that the channels proposed for tidal channel creation previously existed prior to disturbance of the site. Finally, the native plants that will be used to revegetate the Otter Point wetland will come from a variety of sources including NPS grown stock, salvaged plant material from local sources, and local nurseries.

RESTORATION ALTERNATIVES

Descriptions of Reasonable Alternatives

Reasonable alternatives, including the No Action alternative were evaluated during the NEPA process. Possible alternatives include active restoration at Otter Point (Alternative 2); and a No Action alternative as required under NEPA (Alternative 1).

Screening Criteria and Included Restoration Actions

The project alternatives proposed were evaluated by NPS, and the Otter Point interdisciplinary team. The team developed criteria to evaluate whether the restoration actions were suitable for the project site. The evaluation criteria ensure that the selected restoration actions not only comply with laws, policies, and regulations pertinent to NPS, but also are technically feasible and consistent with the restoration goals of the park.

The interdisciplinary team and NPS evaluated each restoration alternative against screening criteria to determine whether they met the minimum level of acceptability required to merit further consideration. Evaluations ascertained whether the alternative is consistent with NPS restoration goals. Evaluation criteria also included public health and safety criteria which ensured that the alternative poses no threat to the health or safety of the public or agency staff, and it complies with applicable health or safety requirements and guidelines. Furthermore, the alternative was screened to certify that it complies with the policies and procedures of NPS and confirm that the action can be implemented in a manner consistent with established policies and procedures applicable to the park. Finally, the alternative was screened to affirm that the proposed restoration action complies with all applicable federal, state, and county laws and regulations. The evaluation of each action against each of the screening criteria resulted in either a "yes" or "no" response, for meeting or not meeting the criteria, respectively (See Table 2-1).

Technical Feasibility

One of the primary screening factors in determining technical feasibility of restoration alternatives is whether it would meet the cultural resource restoration goals of NPS. In order to recreate the historic landscape conditions of Fort Clatsop, NPS desires to restore historic channels transecting the Otter Point wetland that will hydrologically reconnect the wetland with the Lewis and Clark River.

During the 2 phased design process to develop potential active restoration alternatives for the Otter Point site, the project engineers reviewed the LiDAR data provided by NPS and conducted ground surveys within the wetland complex. Both LiDAR and field survey data were then integrated into a baseline data set that established boundaries and topographic conditions for the entire project area. LiDAR, confirmed by field surveys of the Otter Point ground surface, revealed 2 historical estuarine channels that formerly traversed the project site (Henderson Land Services 2010: 5). Knowledge of the location and extent of historic channels allowed engineers to perform a hydraulic and hydrologic analysis of the site to determine the extent of tidal inundation if the historic channels at Otter Point were restored. The extensive modeling and analysis performed enabled the interdisciplinary team to evaluate whether the proposed action alternative would achieve the desired goal of

hydrologic reconnection of the Otter Point wetland with the Lewis and Clark River to recreate conditions experienced during the winter of 1805- 1806.

Natural resource restoration goals were also important screening factors in determining the technical feasibility of the restoration alternatives at Otter Point. As per the 2008 Biological Opinion, federal agencies, such as NPS, have a legal responsibility to implement projects that benefit Columbia River Basin salmon. The interdisciplinary team evaluated proposed alternatives based on their ability to meet the cooperative goal of restoring critical habitat for salmonids.

Public health and safety related to flood protection was another chief consideration in screening potential restoration alternatives at Otter Point. In order to ensure that the selected alternative produces no undue burden to the local community, the hydraulic and hydrologic analysis was utilized to determine the extent of tidal inundation expected for the proposed restoration alternatives. A geotechnical analysis of soils at the project site was conducted to determine whether the soil composition was suitable to build a structurally sound realigned levee structure if the historic tidal channels were restored.

Table 2-1 presents an assessment of all reasonable wetland restoration actions against the evaluation criteria, which are described above.

Table 2-1. Restoration Actions Evaluation Table

	Screening Criteria				
Restoration Actions	**Technically Feasible**	**Complies with NPS Policies and Procedures**	**Complies with Laws and Regulations**	**Consistent with NPS Restoration Goal**	**No Threat to Public Health and Safety**
No Active Restoration	Yes	Yes	Yes	No	No
Partial Levee Removal	Yes	Yes	Yes	Yes	Yes
Full Levee Removal	No	No	Yes	Yes	No

Alternative 1: No Action

The first alternative considered for the Otter Point Restoration is the No Action alternative. As implied, under this alternative NPS would not implement the proposed active restoration methods described under Alternative 2. However, the park would continue managing the site through existing methods as part of the General Management Plan.

Current management actions performed at the Otter Point site include wildlife monitoring and invasive vegetation control. Wildlife presence is monitored through elk surveys and wildlife cameras posted within the wetland complex. The Otter Point site is also treated for non-native plants such as Himalayan blackberry and reed canary grass. These existing

management activities are considered part of the No Action alternative for the evaluation process.

Figure 2-1. Existing Otter Point Conditions Map

Alternative 2: Active Restoration of Tidal Wetlands at Otter Point

The second alternative involves active restoration methods to restore historic tidal connection between the Lewis and Clark River and the Otter Point wetland. Preliminary designs for this project were completed in 2008. This initial design phase included ground surveys, soil surveys, hydraulic and hydrologic analysis, geotechnical analysis, a wetland delineation, a preliminary cultural analysis, and an engineering feasibility study to develop a restoration design with the goal of improving estuarine habitat connectivity with the greatest ecological benefit possible while at the same time ensuring that there will be no negative impacts to adjacent landowners.

The project engineer reviewed LiDAR data provided by NPS, while concurrently conducting ground surveys of the site. Both LiDAR and field survey data were then integrated into a

baseline data set that established boundaries and topographic conditions for the entire project area (Henderson Land Services 2010: 5). Examination of LiDAR imaging, as well as ground surveys indicated that 2 historic channel networks transect the Otter Point wetland. Design engineers determined that by removing dredge material within the historic channel networks, and breaching the dike at the 2 locations, the park could effectively restore tidal connectivity to the Otter Point wetland (See Figure 2-2). In order to ensure that the neighboring pasture would not also be inundated, design engineers proposed utilizing the excavated dredge materials from the historic tidal channels to construct a realigned section of the dike along the northern border of the wetland. Along with the constructed enhanced levee, an additional culvert and tide gate would be installed below the levee in the northwestern corner of the property in order to provide additional drainage to the adjacent pasture. The existing culvert and tide gate in the northeastern corner would be replaced with a new culvert and tide gate in the existing location to ensure that current drainage patterns are not negatively altered. Furthermore, a bioswale would be constructed on the northern side of the enhanced levee to provide adequate water storage capacity for surface water drainage during high water events.

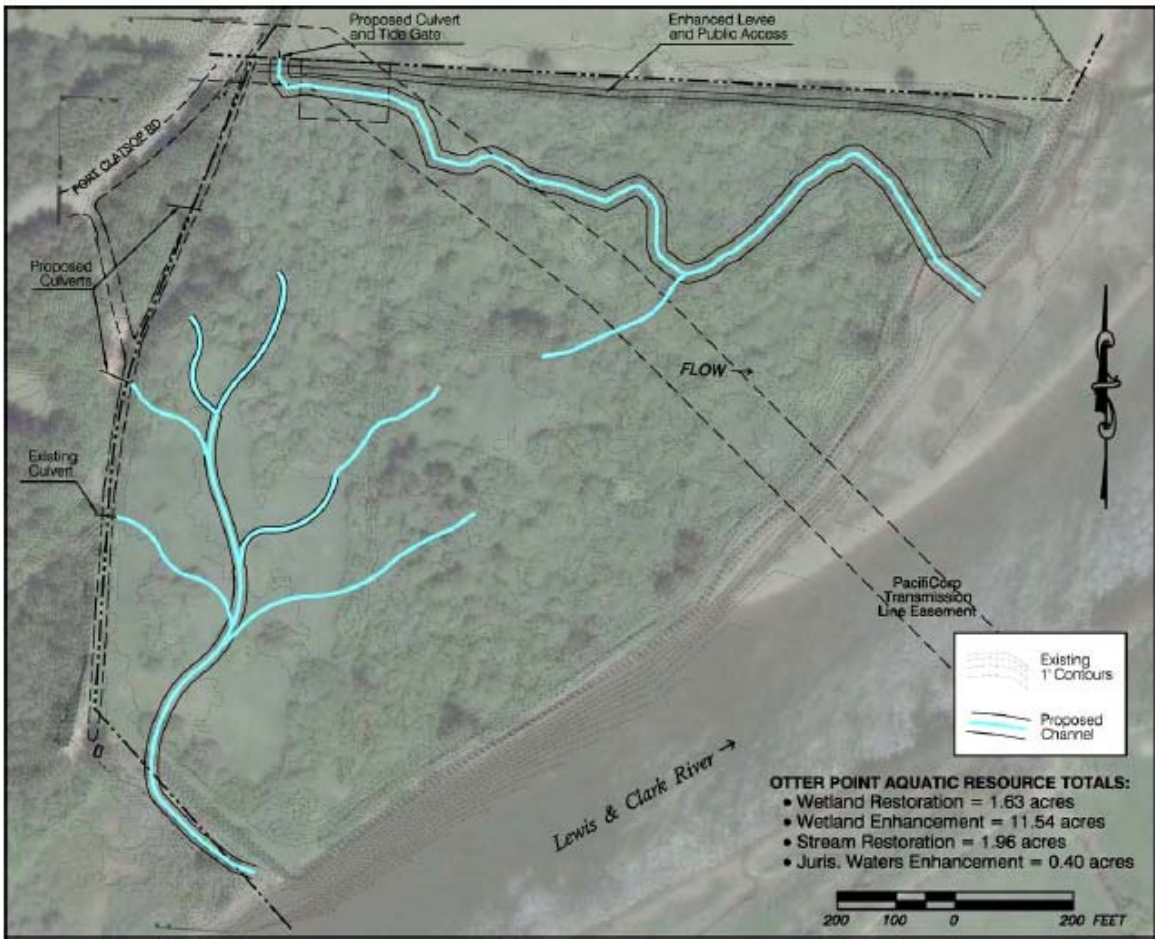

Figure 2-2. Otter Point Alternative 2 Conceptual Map

Selecting the partial dike removal method satisfies the park's General Management Plan by restoring the cultural landscape of Otter Point back to the tidal marsh environment that existed during the 1805-1806 occupation by the Corps of Discovery. This design also complies with the 2008 Biological Opinion by restoring 13 acres of off-channel juvenile salmonids forage and rearing habitat within the Columbia River Basin.

The preliminary design work enabled the park, along with its partners to determine the most practical alternative, and to seek additional funding for advanced design work. Full project designs were completed in March 2010. The refined designs further developed the ideas and models presented in the preliminary project designs, and clarified specifications for construction of the realigned northern levee.

Alternative 2, the enhanced partial levee removal, balances excavation and fill activities on the Otter Point Restoration site. This preferred design restores tidal influence within Otter Point and provides a surface hydrologic connection to the Lewis & Clark River. Restored dendritic tidal channels (totaling 4,952 lineal feet) transecting the site provide tidally-influenced habitat with diverse salinity profiles for salmonid refugia and rearing. Freshwater input from upslope seeps, springs, and intermittent streams is directed into these channels to increase diversity and seasonal productivity of this estuarine habitat. Establishment of small-scale channels and alcoves off of the larger restored channels will provide a diversity of refugia for juvenile salmonids. With reestablished surface connectivity with upslope seeps, springs and intermittent streams, coupled with the anticipated intersection of channel excavation with ground water *in situ*, juvenile salmonids will be presented with a diversity of salinities throughout the project site; this will allow these fish to undergo osmotic regulation and transition while occupying the restored project site. The juxtaposition of small channels and alcoves with upland margin vegetation on portions of the site will enhance opportunities for macroinvertebrate recruitment – an essential component of juvenile salmonid use of historical estuarine channels that has been lost throughout large portions of the Columbia River estuary (Henderson Land Services 2010: 13).

This alternative will also restore topographical diversity found in similar salt marshes by placing and shaping excavated native material adjacent to portions of the levee where spruce trees have become established (typically above the 11-feet NAV88 elevation). These restored and/or enhanced 'islands' will add to the habitat diversity of the Otter Point site, providing such functions as shading and macroinvertebrate recruitment over salmonid-bearing channels, nesting and roosting areas for passerines and waterfowl, and the like (See Figure 2-3). Enhancement of these islands will provide for placement of excess excavated material over that required for enhancement of the northern levee. Slopes of these shaped upland islands are very gradual (minimum 3:1) providing for establishment of a diversity of native plantings. At the toe of each slope, a broad, shallow swale provides for introduction of freshwater and saline-tolerant native herbaceous species as well as provides opportunities for surface drainage back into the Lewis & Clark River (Henderson Land Services 2010: 16).

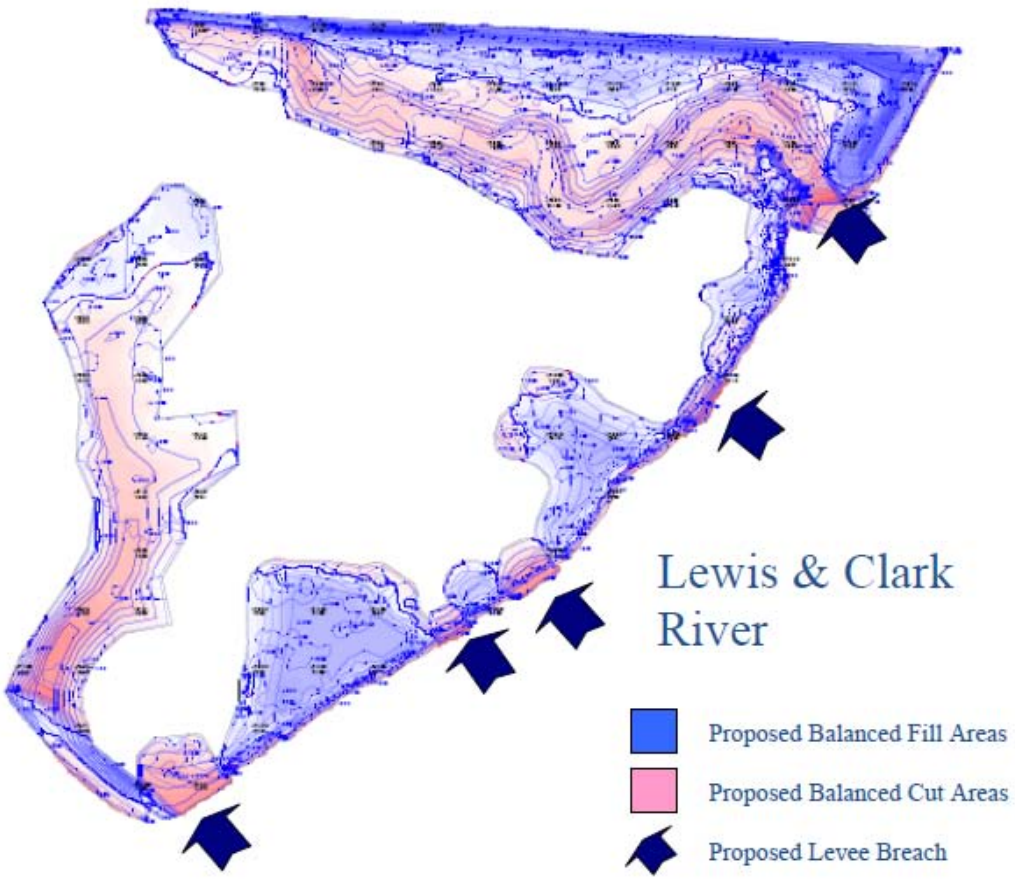

Figure 2-3. Proposed Topographic Diversity at Otter Point Restoration Site

To mitigate the risk of flooding private properties downstream (north) of the project site, the levee along the northern site boundary will be structurally enhanced. This enhancement will involve using dredge spoils obtained adjacent to the existing levee on the riverbank as well as material generated from levee breaching on the eastern edge of the Otter Point site (Henderson Land Services 2010: 16).

Organic material is present in the root zone throughout the restoration portions of Otter Point dominated by reed canary grass. Organic strippings can be blended into proposed structural fill such that the final product contains no more than 10 percent organic content by dry weight. It may be feasible to bury soils with a higher organic content below a depth of 5 feet in the enhanced levee soil matrix, but confirmation of this point will require future analysis. The project design therefore proposes that organic materials are to be excavated and used to fill the existing ditch located on the north of the site; the proposed enhanced levee will extend over and above this buried material.

As designed, the enhanced northern levee will be approximately 1,400 feet long, with a height of 15 feet. The sides of the levee will be constructed with a 2-feet horizontal to 1-foot vertical (2H: lV) slope on the riverward side, and 3-feet horizontal to 1-foot vertical (3H: lV)

on the landward side. Proposed borrow material will be from dredge spoils and the existing Lewis & Clark River levee on the eastern edge of the project site. Segregation of organic rich material and large fragments of wood and plant matter will require visual inspection and a high level of quality control. It is not anticipated that all organic material can be screened from the berm fill; therefore a small amount of organic material is acceptable. Based on site soil sampling, it appears than this material generally consists of fine sand with a varying fraction of particles finer than the U.S. Standard No. 200 Sieve (fines). Some material generated from breaching the existing levee will also be used; this material consists primarily of fines with a varying sand fraction. USACE states that almost any soil is suitable for construction of levees, except very wet, fine-grained soils and highly organic soils (Henderson Land Services 2010: 17).

In addition to breaching the dike and regrading historic tidal channels, NPS elected to further enhance the wetland by removing invasive reed canary grass, and replanting over 15 acres of the wetland with native plant varieties (See Figure 2-4). Although project designs indicate that restoration and diversification of Otter Point's native vegetation communities will be achieved, in part, through the reintroduction of site hydrology and salinity, as well as the physical removal of significant areas of reed canary grass, planting of native species will significantly increase riparian and estuarine wetland habitat diversity – including critical 'edge' habitat – for native mammals and birds (Henderson Land Services 2010: 24).

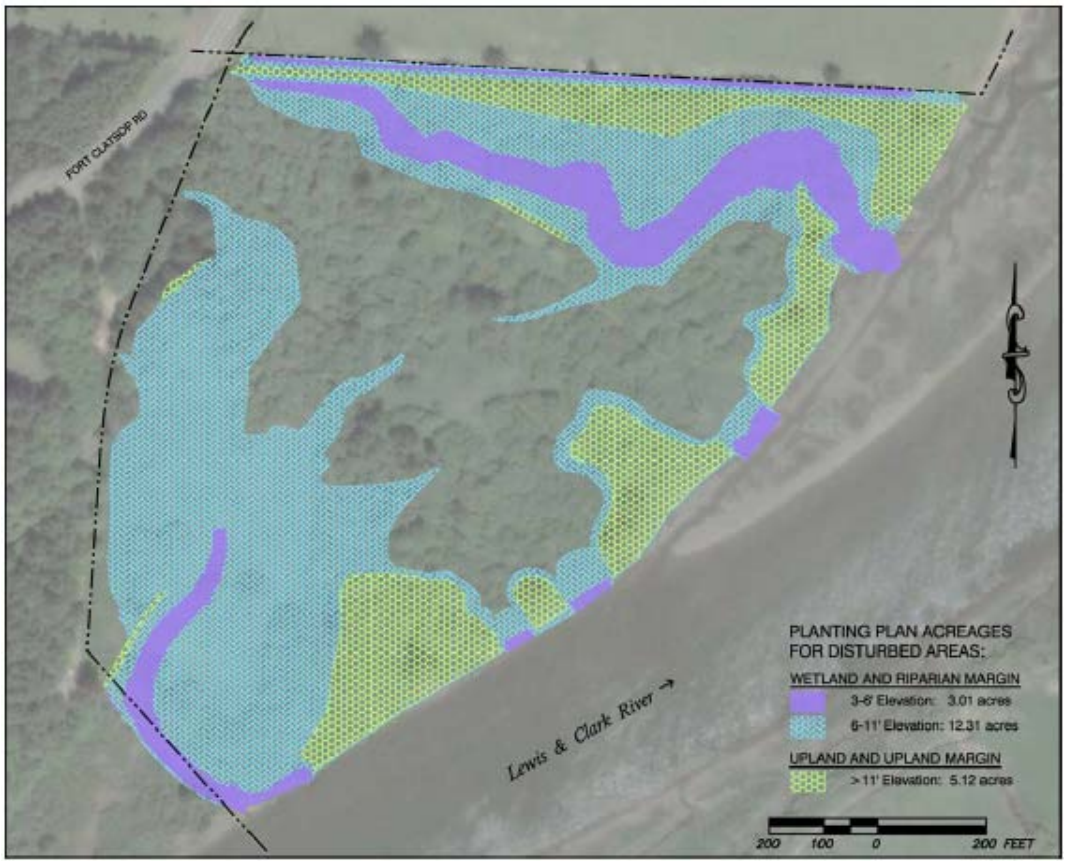

Figure 2-4. Proposed Planting Plan for Otter Point Restoration Site

Tidal wetland acreage restored, in terms of habitat utilization, includes 1.63 acres of uplands that were historically filled with dredge material or diked off and 11.5 acres of low quality fresh water wetlands. Another 8.5 acres of low quality fresh water wetlands would be rendered off-channel habitat for fish usage and salmon refugia. Similar dike breach projects on the Lewis and Clark River have demonstrated increased water quality (e.g. higher oxygen and lower temperatures) after restoration (Henderson Land Services 2010: 24).

Other Alternatives Considered but Eliminated

During the development of this project, several technical restoration actions were considered. The most notable alternative was the design alternative known as the "Full Levee Removal". This alternative involved removing the entire levee, as opposed to portions in specific areas. Ultimately this alternative was not chosen for the following reasons:

1.) Pacific Power and Light has a high voltage transmission line, known as the "Warrenton Spur" that bi-sects the project site. It is the main electrical connection between Astoria and Tillamook. Full removal of the levee could mean complete flooding of the property during extreme flood events. Recent extreme flooding events and severe windstorms in December, 2007 resulted in many downed power lines that crews were not able to access because of flooding and left many customers without power for an extended period of time. This poses a health and public safety concern. Pacific Power and Light must have access to this transmission line in order to repair or protect the transmission line when necessary; if this line goes down, Warrenton and Tillamook are without power. Pacific Power and Light possesses an easement within the project site that allows them access for maintenance, repair and construction. Full removal of the existing levee would compromise the right of access granted in the easement, and would result in potentially intrusive methods of alternate access to the power poles that would nullify portions of the restoration benefits.

2.) The preliminary estimate for grading for full levee removal would have required approximately 50,000 cubic yards of excavation. Construction of the northern levee would 'use' 30,000 cubic yards. The remaining 20,000 cubic yards would have to be disposed of off-site at considerable expense as well as the difficulty in finding a legal location to take the material.

3.) Maintaining or preserving winter habitat for the resident Roosevelt elk in the park is a priority for the NPS. Full levee removal would allow flooding of the Otter Point site, even though it may be an uncommon event; it may prevent higher elevation vegetation communities from transitioning to a spruce/hemlock forest that provides habitat and cover for the resident elk.

NPS Preferred Alternative

The preferred alternative was determined through evaluation by NPS and project stakeholders based on its ability to meet restoration objectives, as well as its potential impact on the environment and surrounding properties. Alternative 2 is the NPS preferred alternative based on its ability to satisfy the requirements of both the NPS General Management Plan/ EIS and the 2008 Biological Opinion, while also meeting other project goals such as having no foreseeable adverse impacts on adjacent properties.

Environmentally Preferred Alternative

The environmentally preferred alternative is the alternative that would promote the national environmental policy expressed in the National Environmental Policy Act.

Section 101(b) of the National Environmental Policy Act identifies six criteria to help determine the environmentally preferred alternative. The act directs that federal plans should:

- Fulfill the responsibilities of each generation as trustee of the environment for succeeding generations.
- Ensure for all Americans safe, healthful, productive, and aesthetically and culturally pleasing surroundings.
- Attain the widest range of beneficial uses of the environment without degradation, risk of health or safety, or other undesirable and unintended consequences.
- Preserve important historic, cultural, and natural aspects of our national heritage and maintain, wherever possible, an environment that supports diversity and variety of individual choice.
- Achieve a balance between population and resource use that will permit high standards of living and wide sharing of life's amenities.
- Enhance the quality of renewable resources and approach the maximum attainable recycling of depletable resources.

Generally this means the alternative that causes the least damage to the biological and physical environment. It also means the alternative that best protects, preserves, and enhances historic, cultural, and natural resources (CEQ, 1981). Continuing the current conditions under Alternative 1, the No Action Alternative, NPS would fail to enhance the quality of renewable resources. The Otter Point wetlands system would continue to exist in its degraded condition that provides minimal habitat value to native fish and wildlife. The wetland site would also continue to exist in a condition that does not reflect the historic conditions that were experienced by Lewis and Clark's Corps of Discovery during the 1805-1806 occupation of Fort Clatsop.

Table 2-2. Comparison of Impacts to the Alternatives

	Alternative 1	Alternative 2
	No Action	**Active Restoration**
Physical Environment	The continued isolation from natural nutrient cycling and hydrologic floodplain connectivity would result in minor long-term adverse impacts.	This alternative will actively enhance approximately 21 acres of tidal wetland through removal of invasive vegetation, combined with revegetation of 18 acres with native plants. Reestablishing 4,952 feet of historic tidal wetland will result in minor long-term benefits in flood storage and nutrient deposits within lower portion of the Lewis and Clark River, and major long-term benefits for overall conditions of the Otter Point site itself.
Fish and Wildlife	The continued existence of degraded wetland with limited wildlife habitat value would result in minor long-term adverse impacts. However, elk currently utilize this wetland and seasonal habitat, and would therefore not be negatively impacted.	This alternative would increase the diversity of habitats within the Otter Point wetland system, and therefore would result in major long-term beneficial effects. However, there is a potential for minor short-term adverse effects on elk due to displacement during construction.
Threatened and Endangered Species	The continued isolation from riverine flows and exclusion of juvenile salmonids from off-channel habitat would result in minor long-term adverse impacts.	This alternative would increase off-channel salmonid refugia and provide rearing habitat for juvenile salmon. The end effect would result in major long-term benefits for endangered species.
Historical and Cultural Resources	This alternative would have negligible long-term adverse impacts on historical and cultural resources.	This alternative would help to meet the goals set in the park's General Management Plan to restore diked pasturelands to recreate the historic setting of Fort Clatsop, thereby creating moderate long-term beneficial effects.
Recreation and Visitor Experience	The No Action alternative would not enhance visitor experience; therefore would result in negligible long-term adverse impacts.	This alternative would create the opportunity to use the restored wetland as an educational tool, as well as provide the potential for an expanded trail system and improved viewshed. The end effect would result in moderate long-term beneficial effects.
Land Use	This alternative would not create land use conflicts with adjacent properties, but also would not improve existing conditions. Therefore, the result would be negligible long-term adverse effects.	This alternative would provide increased drainage to the neighboring pasture, thereby creating minor long-term beneficial impacts. However, there is also potential for minor short- term adverse effects due to construction activities.

Table 2-3. Summary of Alternatives Considered

Alternative	Result/ Considerations
Alternative 1: No Action	• Further degradation of the wetland system may occur due to continued spread of invasive vegetation. • Wildlife and endangered species would not benefit from restored off-channel salmonid habitat and diversified estuarine wetland habitat. • Action would not meet Park management goals to restore diked pasturelands to estuarine wetlands, and to recreate the historic riverine setting of Fort Clatsop.
Alternative 2: Restoration Using Active Restoration Approach	• Restoration actions have the potential to improve current wetland conditions by reducing invasive vegetation and restoring tidal flow. • Alternative provides potential for off-channel habitat for endangered species of salmonids as well as a more diverse wetland ecosystem. • Action is consistent with Park management goals to restore diked pastureland and recreate historic setting. • Provided that all regulatory standards are met, action will not adversely affect adjacent land uses.

Mitigation

The action alternative for this project would primarily result in beneficial effects. In areas where there is the potential for either short- term or long-term adverse effects, mitigation measures will be used to minimize negative impacts. Mitigation measures include best management practices (BMPs). BMPs proposed include but are not limited to the following:

- Clearing/grading will be limited to minimum practicable extent.
- There will be no tree cutting or vegetation removal outside of the project area.
- Sediment fencing will be installed along the ordinary high water line to prevent siltation from any adjacent upland work.
- All completed bank sloping & stream channel work will be covered with biodegradable coconut jute mesh netting and re-vegetated.
- All disturbed areas of the project will be seeded with native grass seed and covered with straw after construction is complete to prevent erosion and sedimentation out to Lewis and Clark River.

AFFECTED ENVIRONMENT

This section describes the environment expected to be affected by the Otter Point restoration alternatives proposed in this assessment. The environments/issues discussed include the physical environment, the biological and natural resources, critical habitat, historical and cultural resources, recreation and visitor experience, human health and safety, aesthetics, and Park operations.

Physical Environment

The Otter Point restoration site is located in the Youngs Bay Watershed near the mouth of the Columbia River in Northwest Oregon. The Young's Bay Watershed is the largest watershed in the Columbia River Estuary. The Columbia River Estuary supports some of the largest anadromous fish runs in the world and provides unique habitat for several sensitive and endangered species. Past research shows that the Young's Bay Estuary is one of the Lower Columbia's most bio-diverse areas. The lower Young's Bay Watershed, including the Lewis & Clark River has undergone considerable modification from its former forested, wetland and estuarine habitats. The lower Lewis & Clark River once contained significant Sitka spruce swamp habitat as well as extensive estuarine marshes, freshwater tidal wetlands and bottomland riparian vegetation. Historical logging, grazing and hydrologic manipulation of the river through construction of levees and river channel dredging as well as more recent rural development prevent the natural tidal interactions between the river and adjacent lands. It is estimated that 95% of all bottomlands within the watershed have been lost to diking. Much of the former tidal, estuarine wetlands are now owned by private landowners who actively manage it for agriculture. Due to active land-use of the watershed, very few restoration opportunities are currently available (Young's Bay Watershed Assessment, 2001).

Geology

During the winter of 1805- 1806, the presidentially appointed Corps of Discovery led by Lewis and Clark encamped at Fort Clatsop, named for the Clatsop Indians who inhabited this area. A modern replica of Fort Clatsop sits in the approximate location of the historical fort, and is located a short distance south of the Otter Point Restoration Project site. In the years following the Corps of Discovery's departure, the Clatsop Indians briefly occupied the site, but soon the Fort fell into ruin. By the mid-19th century, the site was being used by newly arrived agricultural settlers, who grazed livestock and grew modest crops along the banks of the Lewis & Clark River (Henderson Land Services 2010: 1).

In the intervening years, Otter Point's landscape was altered from tidally-influenced wetland and estuarine habitat into pastureland. Protective levees were constructed along the site's river frontage to reduce the influence of tides from Young's Bay as well as Lewis & Clark River flows. Materials dredged from the bed of Young's Bay and Young's River to improve shipping access and commerce were pumped into the Otter Point site as fill. With these changes to site elevation and hydrology, the Otter Point Restoration site no longer sustained a native vegetation community as experienced by the Lewis & Clark Expedition and early explorers to the Pacific (Henderson Land Services 2010: 1).

Water Quality

Currently, the Otter Point site consists of degraded freshwater wetland that is fed by freshwater input from upslope seeps, springs and intermittent streams. However, Otter Point is adjacent to the Lewis and Clark River within the tidal zone of the Columbia Estuary. NOAA Fisheries have placed a conservation emphasis on the oligohaline and brackish aquatic transition zones because of their role in acclimatizing sub-yearling salmon to salt water. Loss of these habitats is a major concern in the lower Columbia River Estuary where more than half of historic tidal floodplains and wetland complex have been altered. In addition to reduced habitat complexity, the Lewis & Clark River is listed for fecal coliform on the state's 303(d) inventory of impaired water bodies (Young's Bay Watershed Assessment, 2001).

A culvert and tide gate at the northeastern corner of the Otter Point wetland drains the neighboring pasture through a hand-dug ditch. This ditch provides very little filtration of nutrients and bacteria from livestock carried through surface water runoff. Lack of filtration of flow from the neighboring property likely contributes to the degraded water quality of the Lewis and Clark River. Furthermore, due to a topographical crown in the neighboring pasture, surface water flow on the western portion of the field is unable to drain to the culvert and tide gate, and therefore ponds in the corner of the property.

Hydrology

The Otter Point site is a 33.5 acre wetland that supports a freshwater dominated habitat, which provides little of its historic value to salmonids. The water levels in the estuarine portion of the Lewis & Clark River are influenced by the semi-diurnal tide in the Columbia River. The mean tide range in Astoria, Oregon is more than 6 feet. The FEMA Flood Insurance Rate Map for the project area provides a 100-year flood elevation of 9 feet NAVD88 (Anchor Environmental, 2008: 3).

In its current state, the Otter Point wetland is hydrologically disconnected from tidal and riverine influence. Water sources for this site are primarily seeps, springs, and seasonal flows from upslope sources that are impounded by the existing Lewis & Clark River levee. A tide gate at the river terminus of the northern excavated drainage allows for limited outflow of these impounded surface waters (Henderson Land Services 2010: 10).

Vegetation

Vegetation on the Otter Point site has been influenced by the historic disturbances mentioned elsewhere in this document. The Lewis & Clark River levee prevents tide waters or river flows (typically below 6 feet in elevation, NAV88) from entering the site, therefore, the majority of the plants identified on site were fresh water wetland species. Reed canary grass is the most widespread invasive plant found throughout the site and inhabited much of the PEM wetland habitat (characterized between 6-feet and 11-feet in elevation). Hooker willow forms almost impenetrable thickets of PSS wetland and stands of Sitka spruce are found on old dredge material piles which accounted for the limited upland vegetation communities within the wetland. The vegetative boundary between upland vegetation stands and wet willow thickets occurs at the drip line of the larger spruce trees, and generally at an elevation above 11-feet, NAV88 (Henderson Land Services 2010: 8).

Reed Canary Grass

Reed canary grass is a rhizomatous perennial grass that can grow up to 6 feet in height. Reed canary grass prefers wetland environments in soils that are saturated or nearly saturated most of the growing season, but does not have standing water that persists for extended periods. Due its highly productive nature, this grass species poses a major threat to many wetland ecosystems. Reed canary grass grows so vigorously that it is able to inhibit and eliminate native wetland species that compete for sunlight and nutrients. Unlike native wetland vegetation, dense stands of reed canary grass have little value for wildlife. Few species eat the grass, and the stems grow too densely to provide adequate cover for small mammals and waterfowl. The species is considered a problem weed along irrigation banks and ditches because infestations can increase siltation. When in flower, the species produces abundant pollen and chaff, which aggravate hay fever and allergies (Pojar, MacKinnon 2004: 370).

Soils

The sectional township of the Otter Point area is 17, and this unit consists of soils in tidal areas along the Columbia River and major streams draining into the river. A pedon is comprised of Coquille-Clatsop complex, protected behind the dike, and having 0 to 1 percent slopes. Protected areas of this unit that are protected and drained are used for hay and pasture. Areas that are not protected are used for wetland and wildlife habitat, and soils consist of very deep, very poorly drained silt, loam and muck on flood plains influenced by tides, these soils formed in alluvium (United States Department of Agriculture 1984: 144-145).

Mean annual soil temperature ranges from 49 to 52 degrees Fahrenheit. The difference in mean soil summer and mean winter temperature is less than 9 degrees. The soil is usually saturated and is inundated by high tides unless protected by dikes or levees (United States Department of Agriculture 1984: 144-145).

Soils in the Otter Point area, where diked and drained, are generally extremely acid to very strongly acid, but in some areas soils are strongly acid or moderately acid below depth of 40 in. Where not diked and drained, the soil is medium acid to neutral (United States Department of Agriculture 1984: 144-145).

Soil surveys of the Otter Point site have found large amounts of dredge material throughout the wetland. Dredge material on the site ranges from sand to silt and is 35 to 64 inches deep. A thin layer of partially decomposed organic material was found below the dredge material signifying the historic ground surface. In general, the dredge material was deepest in the southwest corner of the wetland, and shallowest in the northeastern corner (Henderson Land Services 2010: 9).

Fish and Wildlife

In its current state, the Otter Point wetland provides marginal habitat for wildlife including Roosevelt elk, amphibians and a variety of bird species. As part of the Columbia Estuary, the adjacent Lewis and Clark River is habitat for a variety of fish species including cutthroat trout, starry flounder, banded killifish, three-spined stickleback, peamouth chub, Pacific staghorn sculpin, largemouth bass, largescale sucker, norther pikeminno, American shad,

black crappie, pumpkinseed sunfish, shiner perch, carp, goby (Invasive), green sturgeon and southern DPS Eulachon (Of Concern), as well as several species of anadromous fish that are listed as threatened or endangered, and will be described in detail in the next section.

Roosevelt Elk

The Roosevelt elk were an important source of food for the Lewis and Clark Expedition at Fort Clatsop. Elk populations in western Oregon were severely depleted by 1900. Hunting seasons were closed and the state began an active restoration and protection program. Populations in western Oregon increased and hunting was reestablished in 1938. Oregon Department of Fish and Wildlife data indicate that elk populations in Clatsop County are stable in number. Forest management and agricultural practices enhance habitat for elk on lands surrounding the Memorial. Wetland areas also provide important elk habitat (NPS 2010).

Threatened and Endangered Species

The ESA directs federal and state agencies to protect and conserve listed T&E animals and plants. The habitat of T&E species takes on special importance because of these laws, and conservation of these species requires careful management. Federally listed T&E species that may be present at the Otter Point site, or could be potentially affected by the proposed action are described below.

Lower Columbia River ESU Coho salmon (Endangered)

Oregon Coast ESU Coho salmon

The Coho salmon is a species of anadromous fish in the salmon family. coho spawning habitat is small streams with stable gravel substrates. The eggs hatch in the late winter or early spring after 6 to 7 weeks in the redd. Once hatched, they remain mostly immobile in the redd as the alevin life-stage, which lasts for 1 – 2 weeks. Alevin no longer have the protective egg shell, or chorion, and rely on their yolk sac for nourishment during growth. The alevin life stage is very sensitive to aquatic and sedimental contaminants. When the yolk sac is completely reabsorbed, the alevin leaves the redd. Young coho spend one to two years in their freshwater natal streams, often spending the first winter in off-channel sloughs, before transforming to the smolt life-stage. In their freshwater stages, coho feed on plankton and insects, and switch to a diet of small fishes as adults in the ocean (NOAA 2005).

Smolts migrate to the ocean from late March through July. Some fish leave fresh water in the spring, spend summer in brackish estuarine ponds and then return to fresh water in the fall. Coho salmon live in salt water for one to three years before returning to spawn. Some precocious males known as "jacks" return as two-year-old spawners (Dawley et al. 1983).

This species is a game fish and provides fine sport in fresh and salt water from July to December, especially with light fishing tackle. It is one of the most popular sport fish in the Pacific Northwest of the United States. Its popularity is due in part to the reckless abandon which it frequently displays chasing bait and lure while in salt water, and the large number of coastal streams it ascends during its spawning runs. Its habit of schooling in relatively

shallow water, and often near beaches, makes it accessible to anglers on the banks as well as in boats (National Research Council 1996).

Historically, the coho, along with other species, has been a staple in the diet of several Indigenous Peoples, who would also use it to trade with other tribes farther inland. The coho salmon is also a symbol of several tribes, representing life and sustenance (National Research Council 1996).

The traditional range of the coho salmon runs from both sides of the North Pacific Ocean. Salmonid species on the west coast of the United States have experienced dramatic declines in abundance during the past several decades as a result of human-induced and natural factors. The U.S. National Marine Fisheries Service has identified seven populations, called Evolutionary Significant Units, of coho salmon in Washington, Oregon and California. Four of these ESUs are listed under the U.S. Endangered Species Act. These are the Lower Columbia River (threatened), Oregon Coast (threatened), Southern Oregon and Northern California Coasts (threatened), and Central California Coast (endangered). The long-term trend for the listed populations is still downward, though there was one recent good year with an increasing trend in 2001 (Lamb and Edgell 1986: 36).

More than 680,000 coho returned to Oregon in 2009, double that of 2007. The Oregon Department of Fish & Wildlife required volunteers to herd fish into hatchery pens. There were reports of creeks with so many fish that "you could literally walk across on the backs of Coho," said Grant McOmie, outdoors correspondent for a Portland television station. Lower temperatures in 2008 North Pacific waters brought in fatter plankton which, along with greater outflows of Columbia River water, feeding the resurgent populations. The 2009 run was so large that food banks were able to freeze 40 tonnes for later use (NOAA 2010).

Snake River ESU, fall run Chinook salmon (Threatened)
Snake River ESU, spring/summer run Chinook salmon (Threatened)
Mid-Columbia River ESU summer run Chinook salmon
Lower Columbia River ESU, fall run Chinook salmon (Threatened)
Upper Willamette River ESU, spring run Chinook salmon (Threatened)
The Chinook salmon is an anadromous fish that is the largest species in the salmon family. It is a Pacific Ocean salmon that is typically divided into "races" with "spring chinook", "summer chinook", and "fall chinook" being most common. Races are determined by the timing of adult entry into fresh water. Chinook salmon are highly valued due in part to their relative scarcity versus other salmon along most of the Pacific coast (NOAA 2005).

Chinook salmon may spend 1 to 8 years in the ocean (averaging from 3 to 4 years) before returning to their home rivers to spawn. Chinook spawn in larger and deeper waters than other salmon species and can be found on the spawning redds (nests) from September through to December. After laying eggs, females guard the redd from 4 to 25 days before dying, while males seek additional mates. Chinook salmon eggs hatch, depending upon water temperature, 90 to 150 days after deposition. Egg deposits are timed to ensure that young salmon fry emerge during an appropriate season for survival and growth. Fry and parr (young fish) usually stay in freshwater 12 to 18 months before traveling downstream to estuaries, where they remain as smolts for several months (Dawley et al. 1983).

Chinook salmon range from San Francisco Bay in California to north of the Bering Strait in Alaska, and the arctic waters of Canada and Russia (the Chukchi Sea). Populations occur in Asia as far south as the islands of Japan. In Russia, they are found in Kamchatka and the Kuril Islands. Their populations have disappeared from large areas where they used to flourish, shrinking by as much as 40 percent (Lamb and Edgell 1986: 35).

Chinook salmon need food, spawning habitat, ocean habitat, cold, clean, oxygenated water and other salmon to survive. As with all salmonid species, chinook feed on insects, amphipods, and other crustaceans while young, and primarily on other fish when older. Young salmon feed in streambeds for a short period until they are strong enough to journey out into the ocean and acquire more food. Chinook juveniles are divided into two types: ocean type and stream type. Ocean type Chinook migrate to saltwater in their first year. Stream type Chinook spend one full year in fresh water before migrating to the ocean. After a couple of years in the ocean, adult salmon, then large enough to escape most predators, return to their natal streambeds to spawn. Chinook salmon can have an extended lifespan, where some fish spend one to five years in the ocean reaching age eight. More northerly populations tend to have longer lives (Johnson and O'Neil 2001).

Salmon need adequate spawning habitat. Clean, cool, oxygenated sediment-free freshwater is essential for egg development. Chinook prefer larger sediment sizes for spawning than other pacific salmon. Riparian vegetation and woody debris help juvenile salmon by providing cover and maintaining low water temperatures (Johnson and O'Neil 2001).

Juvenile salmon grow in clean, productive estuarine environments and gain the energy for migration. Later they change physiologically to live in saltwater. They rely on eelgrass and other seaweeds for camouflage (protection from predators), shelter, and foraging habitat as they make their way to the open ocean. Adult fish need a rich, open ocean habitat to acquire the strength that is needed to travel back upstream, escape predators, and reproduce before dying (Johnson and O'Neil 2001).

Nine populations of Chinook salmon are listed under the U.S. Endangered Species Act as either threatened or endangered. Fisheries in the U.S. and Canada are limited by impacts to weak and endangered salmon runs. The fall and late-fall run in the Central Valley population in California is a U.S. National Marine Fisheries Service Species of Concern. Species of Concern are those species about which the U.S. Government's National Oceanic and Atmospheric Administration, National Marine Fisheries Service, has some concerns regarding status and threats, but for which insufficient information is available to indicate a need to list the species under the U.S. Endangered Species Act (NOAA 2005).

Described and enthusiastically eaten by members of the Lewis and Clark Expedition, the Chinook salmon is spiritually and culturally prized among certain Native American tribes. Many tribes celebrate the first spring chinook caught each year with "First Salmon Ceremonies". While salmon fishing is still important economically for many tribal communities, the chinook harvest is typically the most valuable (National Research Council 1996).

Juvenile fall Chinook salmon have been documented in the shallow near-shore areas throughout the Columbia River estuary. They generally move through the estuary rapidly on their way to sea. Juvenile subyearling fall Chinook move into the estuary between January and September, and display bimodal temporal distribution, with peaks in May/June and July/August. There seems to be a trend towards later migration. Declines in the number of subyearling fall Chinook outmigrants typical of June may be associated with high river flows that generally occurs during this period (Dawley et al. 1983).

Yearling fall Chinook migration timing through the estuary is similar to sub yearlings, with one peak in May/June. Like fall chinook salmon, juvenile summer chinook salmon stocks from upriver (e.g. mid-Columbia River) also migrate downstream as sub-yearlings and therefore can not be differentiated from fall chinook salmon by size. The number of summer run Chinook that reach the estuary is smaller than the number of fall Chinook salmon by comparison (Dawley et al. 1983).

Columbia River ESU Chum salmon (Endangered)
Pacific Coast ESU Chum salmon
The chum salmon is also species of anadromous fish in the salmon family. It is a Pacific salmon, and may also be known as dog salmon or Keta salmon, and is often marketed under the name Silverbrite salmon (Lamb and Edgell 1986: 33)

Most Chum spawn in small streams and intertidal zones. Chum fry migrate out to sea from March through July, almost immediately after becoming free swimmers. They spend one to three years traveling very long distances in the ocean. These are the last salmon to spawn (November to January). They die about two weeks after they return to spawn. They utilize the lower tributaries of the watershed and tend to build redds in shallow edges of the watercourse and at the tail end of deep pools. Juvenile chum eat zooplankton and insects. Chum migrate to sea as subyearlings in the 40 to 50 mm range, spending some time rearing and taking refuge in the tributaries, before heading out in January and February. There are few healthy groups of chum remaining in North America outside of Alaska. This is partially because of dams, which block free flow of water and migration of fish (NOAA 2005).

Two populations of Chum have been listed under the U.S. Endangered Species Act, as threatened species. These are the Hood Canal Summer Run population and the Lower Columbia River Population (NOAA 2005).

Lower Columbia River, summer run Steelhead (Threatened)
Lower Columbia River ESU, winter run Steelhead (Threatened)
Middle Columbia River ESU, winter run Steelhead (Threatened)
Upper Willamette River ESU, winter run Steelhead
Oregon Coast ESU, winter run Steelhead (Species of Concern)
Southwest Washington ESU, winter run Steelhead
Snake River Basin ESU Steelhead (Threatened)
The rainbow trout is a species of salmonid native to tributaries of the Pacific Ocean in Asia and North America as well as much of the central, western, eastern, and especially the northern portions of the United States. The (Anadromous rainbow) salmon are known as steelhead (Behnke 1992:65).

Like salmon, steelhead trout return to their original hatching ground to spawn. Similar to Atlantic salmon, but unlike their Pacific Oncorhynchus salmonid kin, steelhead are iteroparous and may make several spawning trips between fresh and salt water. Steelhead smolts remain in freshwater for about a year before heading to sea, whereas salmon typically return to the seas as smolts. Different steelhead populations migrate upriver at different times of the year. Summer-run steelhead migrate between May and October, before their reproductive organs are fully mature. They mature in freshwater before spawning in the spring. Most Columbia River steelhead trout are summer-run. Winter-run steelhead trout mature fully in the ocean before migrating, between November and April, and spawn shortly after returning. The maximum recorded life-span for a rainbow trout is 11 years (Behnke 1992:65).

Steelhead runs migrate through the estuary with similar timing and peak abundance as sockeye and coho salmon; between March/April through August/September with peak migration period during May/June. Steelhead stocks from upriver generally rear upstream and migrate to the estuary as yearlings (Behnke 1992:65).

Rainbow trout are predators with a varied diet, and will eat nearly anything they can grab. Rainbows are not quite as aggressive as brown trout or lake trout (char). Young rainbows survive on insects, fish eggs, smaller fish (up to 1/3 of their length), along with crayfish and other crustaceans. As they grow, though, the proportion of fish increases in most all populations. Some lake dwelling lines may become planktonic feeders. While in flowing waters populated with salmon, trout eat varied fish eggs, including salmon, cutthroat trout, as well as the eggs of other rainbow trout, alevin, fry, smolt and even salmon carcasses. As rainbow trout grow, they lengthen and increase in weight. Unlike other salmonids, the relationship between length and weight is not linear (Behnke 1992:65).

Steelhead trout populations have declined due to human and natural causes. Two West Coast Evolutionarily Significant Units (ESUs) are endangered under the Federal Endangered Species Act (Southern California and Upper Columbia River) and eight ESUs are threatened. The U.S. National Marine Fisheries Service has a detailed description of threats including habitat loss due to dams, confinement of streams in concrete channels, water pollution, groundwater pumping, urban heat island effects, and other byproducts of urbanization. The U.S. National Marine Fisheries Service has identified 15 populations, called Distinct Population Segments (DPSs), in Washington, Oregon and California. Eleven of these DPSs are listed under the U.S. Endangered Species Act (ESA). One DPS on the Oregon Coast is designated a U.S. Species of Concern. Species of Concern are those species that lack sufficient data to determine whether to list the species under the ESA (NOAA 2005).

Historic and Cultural Resources

The Lewis and Clark National Historical Park is a historically zoned park, and therefore, the park's landscape has been defined as a "cultural landscape" under the NPS Management Policies. The cultural landscape at Fort Clatsop is comprised of approximately 125 acres surrounding the fort replica and associated with the historic use and occupation of the site between 1805 and 1806. As a historic site, the primary cultural landscape resource is the reconstructed physical setting which provides an overall interpretive environment for the site. Primary features contributing to the cultural landscape include the clearing immediately

around the fort, the spring site, Canoe Landing, view sheds from the fort site and the Canoe Landing, the trails linking these resources, and the forest defining/surrounding the development. All of these areas have been physically impacted and highly modified since the historic period. To address these impacts, NPS Management Policies call for the management of the landscape to reflect the scene that prevailed during the historic period. Park managers are thus compelled to recreate, to the extent possible, landscape features, and plant and animal communities comparable to those found there in 1805-06 as they undertake major restoration projects of the sort now considered at Otter Point (Deur 2008: 2). The Otter Point property was not part of the original Fort Clatsop Monument, but was donated to the park by the Fort Clatsop Historical Association. As with all boundary modifications undertaken during and after the General Management Plan process, Otter Point was obtained to protect and enhance the natural and cultural resources at the site, and to present visitors with scenery comparable to that encountered by the Corps of Discovery.

Visitor Use and Experience

Lands and waters within the Fort Clatsop Unit of the Lewis and Clark National Historical Park are utilized mainly for preservation, recreation, education and scientific research. Fort Clatsop is open to the public year-round. Due to the nature of the park and its resources, visitors can experience the park by land or by water. Common activities available within the park include walking, biking, historical reenactments and exhibits, kayaking and canoeing.

Just upstream from the Otter Point wetland on the Lewis and Clark River, Netul Landing serves as a launch for non-motorized boats. The launch is part of the Lewis and Clark Columbia River Water Trail, a 146 mile stretch of water that follows the route taken by the Corps of Discovery on the Lower Columbia River. Guided kayak and canoe tours are also available through the park.

The visitor center at Fort Clatsop marks the trailhead for the Fort to Sea Trail, a 6.5 mile trail that runs from the park to Sunset Beach and Seaside. This trail travels along the coastal streams, lakes and dunes that were once traversed by Lewis and Clark.

Enhancing the natural viewshed of Park property creates indirect benefits for Park visitors. The action alternative considered for this project was also designed as such to include the future potential for extended trails that would link this site with the Fort to Sea Trail. Extended trail systems would allow for interpretive signs and guided tours to educate Park visitors about estuarine wetland habitats. This site and the re-designed levee are included in the Warrenton Trails Master Plan, a 26-mile loop connecting state parks, the national park, and other locations. Incorporating the Otter Point site will help to finalize the Warrenton Trail system, which is currently 80% complete.

Land Use

Past land use practices have determined the patterns of development and landscape at the Lewis and Clark National Historical Park. The Otter Point wetland has undergone significant modification since its historic tidal marsh condition due to a variety of land uses. Past land uses have included logging, grazing, agricultural production and disposal for dredge material. Early logging cleared the area now encompassed in the park of first growth forests and opened up fields for agriculture. Through much of the area's past, the predominant land

use in the Fort Clatsop area was agriculture. The land was cleared and used for pastures and the cultivation of moderate crops such as potatoes. Most of the original park lands reverted to forests following a brief agricultural period. The general pattern of development has resulted in second and third growth forests mixed with marginal wetlands (Henderson Land Services 2010: 1).

Today, land use within the park has transitioned from active agriculture and logging to recreational and educational activities. However, the private property immediately to the north of the park is still actively utilized for grazing cattle. In order to protect the interests of the adjoining land owner and maintain conditions suitable for agricultural use, all analyzed alternatives accounted for continued flood protection and drainage of the neighboring property. The active restoration alternative includes construction of an enhanced levee built to specifications that will increase protection from Lewis and Clark River floods. This alternative also includes the installation of a biological treatment swale on the north side of the enhanced levee to treat and carry surface flows from pasturelands into the head of the northern restored channel through a 36 inch culvert with a self-regulating tide gate, as well as through a culvert and tide gate that currently exists in the northeastern corner of the Otter Point site. This design is intended to increase the drainage capacity of the adjacent pastureland by providing increased surface flow outlets.

Environmental Consequences

This section describes the impacts that the proposed restoration alternatives are expected to have on the affected resources at the Otter Point site. The two alternatives were evaluated, No Action Alternative (Alternative 1) and active restoration approach (Alternative 2). This chapter is organized by resource and presents the potential impacts by alternative. This organizational structure was chosen primarily to evaluate in a systematic manner the many resource topics. This structure was also chosen to facilitate interagency consultations and the review of the impact analysis by various stakeholders and other interested parties. Implementing this style of analysis helps to assure that impacts are thoroughly and comprehensively evaluated, but it does lend itself to some overlap and repetition between similar injury types and resource topics.

Three categories of effects, or impacts, are considered and analyzed: (1) direct effects, which occur at the same time and in the same place as the action; (2) indirect effects, which occur later or at a location away from the action; and (3) cumulative effects, which are additive and include those that occur in the past, present, and foreseeable future. Direct, indirect, and cumulative effects are addressed for each affected resource under the proposed alternatives. The following resources described in Chapter 3, Affected Environment, were evaluated for potential effects.

1. Geology
2. Water Quality
3. Hydrology
4. Vegetation
5. Soils
6. Fish and Wildlife
7. Threatened and Endangered Species
8. Historic and Cultural Resources
9. Visitor Use and Experience
10. Land Use

Analysis Approach

The potential direct, indirect, and cumulative impacts of the alternatives were analyzed for the restoration methods. The resources expected to be affected by the proposed restoration alternatives are described in Chapter 3. Restoration actions and methods discussed in this environmental assessment are those currently approved and utilized by the Lewis and Clark National Historical Park.

Approach for Evaluating Alternatives

The impact analysis involved the following steps:

- Identifying the resource that could be affected.
- Identifying the cumulative effect, duration of impact (long-term or short-term), and intensity of impact (negligible, minor, moderate, or major).
- Identifying whether effects would be beneficial or adverse.

- Identifying mitigation measures that may be employed to offset or minimize potential adverse impacts.

The impact analyses were based on professional judgment using information provided by project designs, NPS staff, relevant references and technical literature citations, and subject matter experts.

Impacts and Effects

Under CEQ regulations the terms "effects" and "impacts" are used synonymously (40 CFR 1508.8). Impacts or effects of an action can be beneficial or adverse. Impacts, or effects, also consider spatial and temporal components. For this assessment, "place" is defined as the Otter Point site, but the meaning of "time" varies. When evaluating direct impacts from restoration actions and specific methods, "time" is defined as the period of time when the restoration activity is occurring.

Cumulative Impacts: The CEQ regulations to implement NEPA require an assessment of cumulative impacts. Under CEQ regulations a "cumulative impact is the impact on the environment which results from the incremental impact of the action when added to other past, present, and reasonably foreseeable future actions regardless of what agency (Federal or non-Federal) or person undertakes such other actions. Cumulative impacts can result from individually minor but collectively significant actions taking place over a period of time." For the purposes of this environmental assessment, cumulative impacts include other ongoing or reasonably foreseeable future projects and plans at the Fort Clatsop Unit of the Lewis and Clark National Historical Park and the contribution of the action on cumulative effects to the resource.

Duration of Impacts

Effects can be characterized by the duration of the effect. Short-term effects include actions that temporarily affect, or have the potential to affect, a resource for 12 months or less, such as disturbance during restoration of areas that are later reclaimed. Long-term effects include actions that affect a resource for greater than 12 months, and may or may not be permanent.

Intensity of Impacts

For all adverse impacts, the intensity of the impact on a given impact topic is described as negligible, minor, moderate, or major. For each impact topic, a distinct set of impact thresholds is used to provide definition of what constitutes an impact of a given intensity. The impact thresholds are aligned to relevant standards based on regulations, scientific literature and research, or best professional judgment. The intensity of an impact on a given topic is determined by comparing the effect to the impact threshold definitions for that topic. Impact thresholds are used for adverse impacts only.

Regulations and Policies—The Organic Act of 1916, NPS Management Policies (NPS 2006b), and NPS Reference Manual 77: National Resource Management Guidelines (NPS 1991) direct NPS managers to provide for the protection of Park resources. These regulations and policies require the NPS to protect and preserve geologic resources and processes.

Impairments

According to the 1916 Organic Act, which established the National Park Service, impairment is an impact that, in the professional judgment of the responsible NPS manager, would harm the integrity of park resources or values. An impact to any park resource or value may, but does not necessarily, constitute an impairment. An impact would be more likely to constitute impairment to the extent that it

- affected a resource or value whose conservation was necessary to fulfill specific purposes identified in the establishing legislation or proclamation of the park, or
- was key to the natural or cultural integrity of the park or to opportunities for enjoyment of the park, or
- was identified in the park's general management plan or other relevant NPS planning documents as being of significance.

Implementation of either restoration alternative considered in this environmental assessment would not result in impairment to park resources. An impairment determination is made for each potentially affected resource for the No Action alternative (Alternative 1), the Active Restoration of Tidal Wetlands at Otter Point (Alternative 2), and the restoration actions overall. Impairment evaluation is only applicable to natural and cultural resources within the park boundaries. Therefore, impairment determinations were not made for visitor use and experience and land use resource evaluations.

Geology

Methodology

Recent field surveys conducted by the hired project engineer, and historical data of the geology and landscape morphology of the proposed project area were used in this analysis. Findings of these assessments and professional knowledge of landscape morphology were used to estimate the effects on the geology of the area.

Thresholds for Intensity, Duration, and Type of Effect:

• **Negligible**—Geologic resources would not be affected or effects would be below or at the lower levels of detection. Any effects to the geology or geomorphology of the site would be slight and no long-term effects would occur.

• **Minor—**The effects to geologic resources would be detectable. Changes in grade would be measurable through photographic documentation or channel cross-sections. If mitigation were needed to offset adverse effects, it would be relatively simple to implement and would likely be successful.

• **Moderate—**The effect on landscape morphology would be readily apparent and likely long-term. The resulting change to the geology would cover a relatively wide area (1-5 ac). Mitigation measures would probably be necessary to offset adverse effects and would likely be successful.

• **Major—**The effect on landscape morphology would be readily apparent, long-term, and substantially change the character of the wetland over a large area (> 5 ac). Mitigation measures to offset adverse effects would be needed, extensive, and their success could not be guaranteed.

Duration:
• **Short-Term—**Lasting only during the construction period or no longer than the first growing season thereafter.
• **Long-Term**—A permanent post-construction impact.

Alternative 1- No Action

Impact Analysis: The No Action Alternative does not entail any changes to the current structures and natural functions of the Otter Point wetland. This alternative would not affect the existing geology at the site from ongoing recreation activities. The Otter Point location would remain isolated from tidal action, and therefore there would be no risk of altered landscape morphology. However, the No Action alternative would perpetuate the artificial geology of diked tideland and filled tidal slough that currently exists at the Otter Point site, and therefore would not meet the NPS cultural and natural resources restoration goals.

Cumulative Impacts: The No Action alternative would not create conditions that would alter the current geological conditions or landscape morphology.

Conclusion: The No Action alternative would have negligible negative long-term effects on geology.

Impairment: There would be no impairment of geology under this alternative.

Alternative 2- Active Restoration of Tidal Wetlands at Otter Point

Impact Analysis: This alternative involves removing 25,546 cubic yards of historic dredge material from 4,952 linear feet of historic tidal channels and existing levee in order to reestablish tidal connectivity between the Lewis and Clark River and the Otter Point wetland. Excavation will expose the Otter Point site to riverine and tidal flows, creating the potential dynamic alteration of design grades throughout the restored wetland. In most cases, minor changes in grade are no a cause of concern, and may even be beneficial. The potential for adverse landscape morphology effects would be reduced through methods to stabilize the excavated channels such as strategically placing large woody debris in areas with increased tidal action, and vegetating stream banks to stabilize the soils (See Figure 4-1). Short-term adverse affects during construction would be minor or negligible and would be mitigated by installing erosion control methods, and excavating the tidal channels 1 year prior to breaching the existing levee to allow the channel time to harden before tidal inundation.

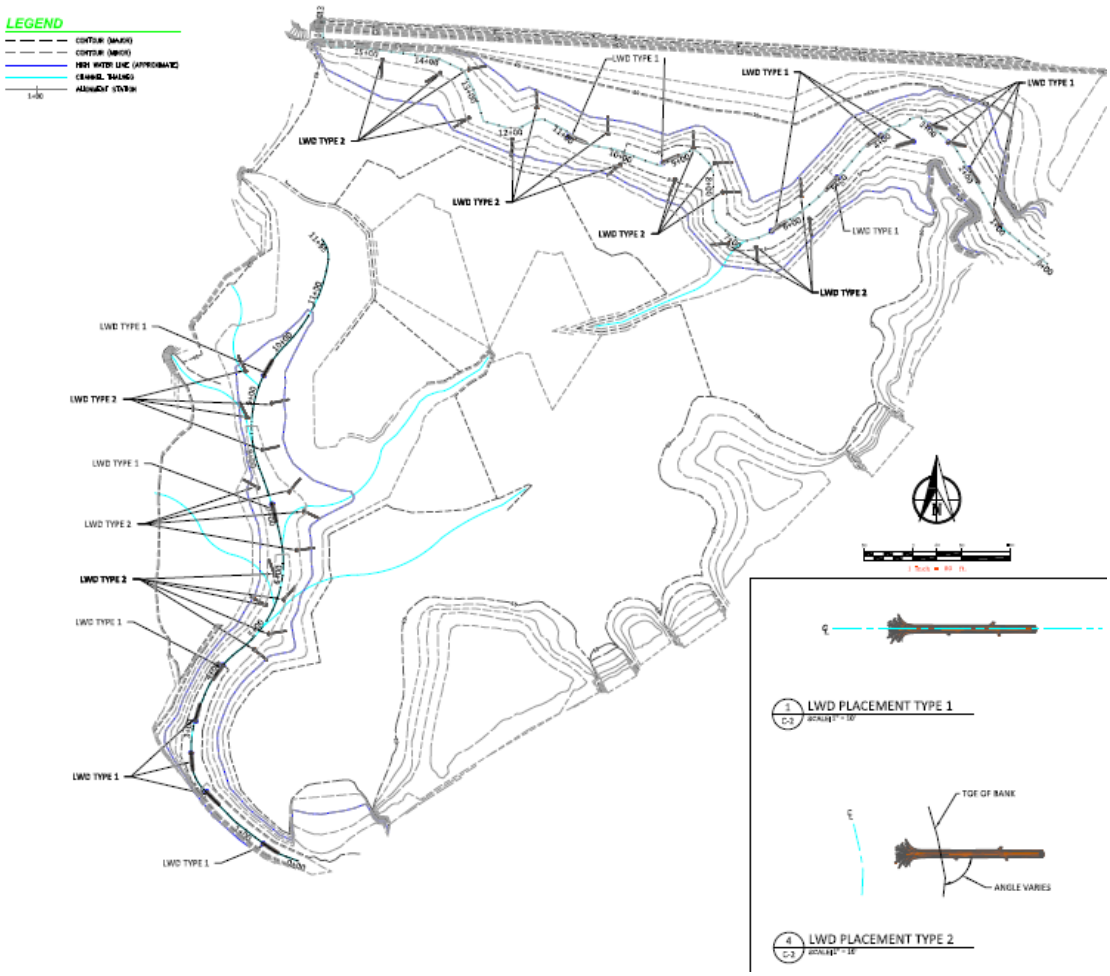

Figure 4-1. Project Design for Excavated Channels and Large Wood Placement at Otter Point Restoration Site

Cumulative Impacts: Alternative 2 would expose the Otter Point site to tidal inundation which will result in long-term beneficial alterations of the site's current landscape morphology by reestablishing historic conditions that were found on site prior to diking and filling activities.

Conclusion: Alternative 2 would have moderate long-term positive effects on geology and landscape morphology. Potential long-term adverse effects would be mitigated by placement of large wood and bank revegetation. Short-term adverse affects during construction would be minor or negligible and would be mitigated through erosion control methods.

Impairment: There would be no impairment of geology under this alternative.

Water Quality

Methodology

On-site visits and surface water quality datasets were utilized to estimate the effects of the proposed alternatives on surface water quality.

Thresholds for Intensity, Duration, and Type of Effect:

• **Negligible—**Very slight changes in surface water quality. Impacts barely detectable.
• **Minor—**Changes in surface water quality would be measurable, although the changes would likely be small and the effects would be localized. No mitigation measures would be necessary.
• **Moderate—**Changes in surface water quality would be measurable and potentially long-term but would be relatively local. Mitigation measures would be necessary and would be effective.
• **Major—**Changes in surface water quality would be measurable, long-term, and broad-scale. Mitigation measures would be necessary and their success would not be guaranteed.

Duration:

• **Short-Term—**Recovery in less than a year.
• **Long-Term—** Permanent post-construction impact.

Alternative 1- No Action Alternative

Impact Analysis: The No Action Alternative suggests no action would be taken to change the existing surface water hydrology or drainage patterns of water discharged from Otter Point. Surface runoff would continue to flow from the adjacent pasture directly into the Lewis and Clark River through the tide gate on the northeastern corner of the property.

Cumulative Impacts: The No Action alternative would not create conditions that will alter the current water quality at Otter Point or the adjacent properties.

Conclusion: This alternative would have negligible long-term negative effects on the water quality of the Otter Point wetland and the adjacent Lewis and Clark River.

Impairment: There would be no impairment of water quality to the Otter Point wetland or the adjacent Lewis and Clark River from this alternative.

Alternative 2- Active Restoration of Tidal Wetlands at Otter Point

Impact Analysis: Alternative 2 project designs recommend creating a bioswale on the northern border of the enhanced levee. This bioswale would have dimensions of 6 feet wide and approximately 4 feet deep (See Figure 4-2). This aspect of the project design would allow for more filtration of surface water runoff through the bioswale, as well as the enhanced wetland system. Additional nutrients and bacteria would have increased chance of being filtered out instead of becoming surface water pollution. Project designs allow for some flexibility of the excavation depth of the proposed bioswale. If it is determined that a

deeper swale is necessary in compensate for higher than expected water volumes, the design of the bioswale can be altered to accommodate that need. Proposed native plantings would add shade and future large wood recruitment into the system, thereby reducing overall in stream water temperature as well.

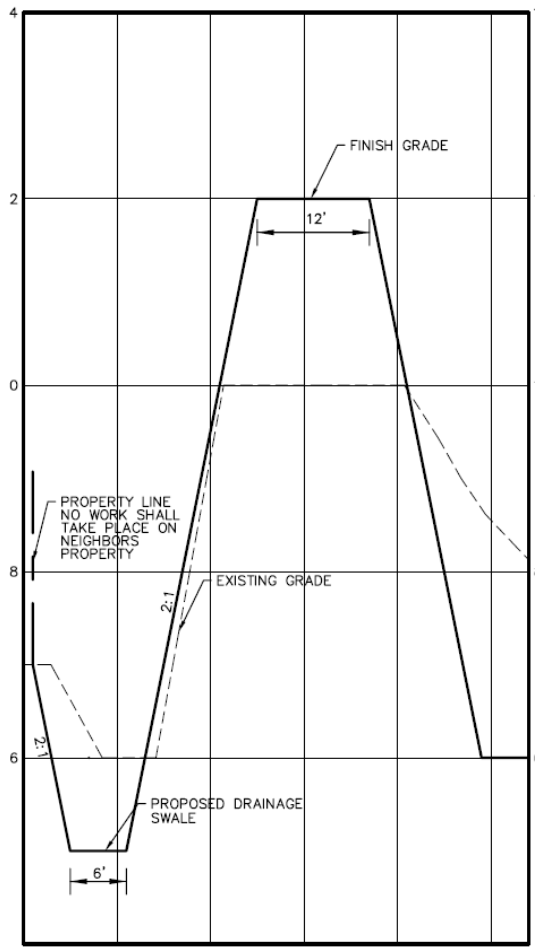

Figure 4-2. Project Design for Constructed Enhanced Levee and Bioswale at Otter Point Restoration Site

Cumulative Impacts: The substantial mitigative measures associated with this alternative would provide minor benefits from increased filtering capabilities within the Lewis and Clark floodplain.

Conclusion: When compared with current conditions, this alternative with the recommended mitigation measures would have minor long-term positive effects to surface water quality.

Impairment: There would be no impairment of water quality to the Otter Point wetland or the adjacent Lewis and Clark River from this alternative.

Hydrology

Methodology

Two-dimensional modeling using was utilized to compute water surface elevations and horizontal velocity components for free-flows both within the Otter Point Project area and the downstream tidal and upstream flow boundary locations.

Thresholds for Intensity, Duration and Type of Effect:

• **Negligible—**Very slight changes in surface hydrology. Impacts barely detectable.
• **Minor—**Changes in surface water hydrology would be measurable, although the changes would likely be small and the effects would be localized. No mitigation measures would be necessary.
• **Moderate—**Changes in surface hydrology would be measurable and potentially long-term but would be relatively local. Mitigation measures would be necessary and would be effective.
• **Major—**Changes in surface hydrology would be measurable, long-term, and broad-scale. Mitigation measures would be necessary and their success would not be guaranteed.

Duration:

• **Short-Term—**Recovery in less than a year.
• **Long-Term—** Permanent post-construction impact.

Alternative 1- No Action Alternative

Impact Analysis: The No Action Alternative suggests that taking no action at the site would not change the existing surface water hydrology or water storage capacity of the Otter Point wetland. The Otter Point wetland would continue to be isolated from the Lewis and Clark River, and would therefore not provide additional water storage capacity or pollutant filtration.

Cumulative Impacts: The No Action alternative would not create conditions that will alter the current hydraulic and hydrologic conditions at Otter Point or the adjacent properties.

Conclusion: This alternative would have negligible long-term negative effects on the hydrology of the Otter Point wetland and the adjacent Lewis and Clark River due to its inability to provide proper wetland functions of filtration and water storage within the floodplain.

Impairment: There would be no impairment of hydrology to the Otter Point wetland or the adjacent Lewis and Clark River from this alternative.

Alternative 2- Active Restoration of Tidal Wetlands at Otter Point

Impact Analysis: The effects of this alternative would not only impact the site itself, but also the Lewis and Clark River system. Alternative 2 would restore hydrologic connectivity between the Otter Point wetland and the Lewis and Clark River. Reestablishing surface connectivity with upstream seeps, springs and intermittent streams would recreate the ecological complexity of the historic tidal wetland. It would also increase the water storage

capacity of the Lewis and Clark River floodplain, and rehabilitate the wetland filtration functions of Otter Point for the larger watershed system

Cumulative Impacts: This alternative, in conjunction with other restoration projects on the Lewis and Clark River, would provide minor long- term positive effects for the River. It would also have a major long-term positive effect on the site itself from hydrologic reconnection and rehabilitation of historic wetland functions.

Conclusion: When compared with current conditions, this alternative would have minor long-term positive effects to surface hydrology of the Lewis and Clark River, and major long-term positive effects on the hydrology of the project site.

Impairment: There would be no impairment of hydrology to the Otter Point wetland or the adjacent Lewis and Clark River from this alternative.

Vegetation

Methodology

Multiple site visits, vegetation community maps and wetland delineation maps, as well as professional knowledge of NPS staff were used to determine potential effects of proposed alternatives at the Otter Point site.

Thresholds for Intensity, Duration and Type of Effect:

• **Negligible –** Direct or indirect impacts would have perceptible but small changes in the size, integrity, or continuity of vegetation at the site.
• **Minor –** Disturbance of vegetation would be measurable or perceptible but limited in size to less than one acre. The overall viability of plant communities would not be affected and would recover. The introduction of exotic plants would be limited to those species already established at the site.
• **Moderate –** Disturbance of 1 to 5 acres of vegetation would occur. Impacts would cause a change in the plant communities (e.g. abundance, distribution, quantity, or quality), but the impacts would remain localized. May result in the introduction of non-aggressive exotic plant species not previously established in the park.
• **Major –** Disturbance of more than 5 acres of vegetation or any disturbance to federally listed plant species would occur. This alternative would also result in the introduction of aggressive exotic plant species not already established in the park.

Duration:

• **Short-term –** The physical impact from the proposed actions would require less than one growing season for the full recovery of plant communities.
• **Long-term –** The physical impact from the proposed actions would require more than one growing season for the full recovery of plant communities

Alternative 1- No Action

Impact Analysis: Immediate removal of invasive species would not be conducted under this alternative. There would be negligible negative impacts to existing vegetation, and no

change in extent or competition at this time. However, active eradication of invasive plant species would be conducted at the site as part of the park's long-term management plan. Efforts could include mechanical removal methods similar to those proposed in the active restoration alternative.

Cumulative Impacts: This alternative would result in negligible short-term negative impacts by allowing invasive vegetation to continue to thrive within the Otter Point wetland at this time.

Conclusion: Alternative 1 would have negligible short- term negative impacts on existing vegetation. Invasive species removal at Otter Point conducted as part of the park's general management plan would have moderate to major long-term positive effects depending on the method used, and the area treated.

Impairment: There would be no impairment of vegetation from Alternative 1.

Alternative 2- Active Restoration of Tidal Wetlands at Otter Point

Impact Analysis: The Alternative 2 project design specifies several methods to actively improve existing vegetation conditions within the Otter Point site. These methods include mowing the reed canary grass then carefully stripping the upper root zone (approximately 1 foot), for an estimated total of 32,574 cubic yards of non-native organic material removed from the site. Enhanced species diversity will be encouraged by hydrological reconnection and planting of native species on approximately 15 acres of wetland, riparian and upland throughout the restored areas of the wetland (See Figure 4-3).

Cumulative Impacts: This alternative would result in major long-term benefits to vegetation within the Otter Point wetland by removing invasive plants, restoring conditions that promote tidal wetland vegetation, and replanting the site with native plant species.

Conclusion: Alternative 2 will have major long-term positive effects on the Otter Point site.

Impairment: There will be no impairment of vegetation from Alternative 2.

Figure 4-3. Project Design for Revegetation of the Otter Point Restoration Site

Soils

Methodology

Recent soil surveys, as well as the engineering feasibility study, USGS soils maps and professional knowledge from NPS staff were used to estimate the effects of the actions on soils.

Thresholds for Intensity, Duration, and Type of Effect:

• **Negligible**—Soil resources would not be affected or effects would be below or at the lower levels of detection. Any effects to soil erosion potential or productivity would be slight and no long-term effects would occur.

• **Minor—**The effects to soil resources would be detectable. Effects to soil erosion potential or productivity would be small, as would be the area affected (< 1 ac). If mitigation were needed to offset adverse effects, it would be relatively simple to implement and would likely be successful.

• **Moderate—**The effect on soil erosion potential or productivity would be readily apparent and likely long-term. The resulting change to soil character would cover a relatively wide area (1-5 ac). Mitigation measures would probably be necessary to offset adverse effects and would likely be successful.

• **Major—**The effect on soil productivity quality would be readily apparent, long-term, and substantially change the character of the soils over a large area (> 5 ac). Mitigation measures to offset adverse effects would be needed, extensive, and their success could not be guaranteed.

Duration:
• **Short-Term—**Lasting only during the construction period or no longer than the first growing season thereafter.
• **Long-Term**—A permanent post-construction impact.

Alternative Action 1- No Action

Impact Analysis: The No Action alternative would not involve any changes to the current levee structures or channel grades on Otter Point. There will be no additional soil erosion or deposition within the site.

Cumulative Impacts: The No Action alternative would not substantially add to soil erosion or reduced productivity within the scope of existing land use at Otter Point.

Conclusion: The No Action alternative would have negligible long-term effects on soil erosion and productivity at Otter Point.

Impairment: There would be no impairment of the soil from this alternative.

Alternative Action 2- Active Restoration of Tidal Wetlands at Otter Point

Impact Analysis: The recommended actions at this site would involve regrading historic channels that transect the wetland to reestablish natural floodplain hydrology and nutrient exchange. These channels experienced sedimentation after dredge material was placed on site, and the wetland was isolated from tidal and riverine flows through diking. Removing 25,546 cubic yards of historic dredge material and re-introducing the site to riverine and tidal flows would renew historic soil dynamics and nutrient exchange processes. Minor short-term adverse effects during construction would be mitigated through erosion control methods and reseeding disturbed areas of the project site following construction activities

Cumulative Impacts: The cumulative impacts of this alternative would result in major long-term positive impacts resulting from increases in soil productivity through enhanced nutrient exchange.

Conclusion: Alternative 2 would result in major long-term positive effects on soil conditions at Otter Point. Mitigation efforts such as erosion control methods and reseeding will off-set potential minor short-term negative effects during construction.

Impairment: There would be no impairment of the soil from Alternative 2.

Fish and Wildlife

Methodology

On-site visits, on-going research, and knowledge and technical expertise by park staff were used to estimate the effects of the proposed actions in the various alternatives.

Thresholds for Intensity, Duration, and Type of Impact:

• **Negligible—**Wildlife would not be affected or the effects would be at or below the level of detection, would be short-term, and the changes would be so slight that they would not be of any measurable or perceptible consequence to the wildlife species' population.
• **Minor—**Disturbance of native terrestrial and/or aquatic wildlife habitat would be limited to one acre or less for terrestrial communities and to highly localized areas along length of the Lewis and Clark River.
• **Moderate—**Disturbance of regionally typical native terrestrial and/or aquatic wildlife habitat would occur. The area of disturbance would be from over one to five acres of terrestrial habitat and the localized areas along length of the Otter Point wetland from the point of construction disturbance to the Lewis and Clark River.
• **Major—**Disturbance of more than five acres of regionally typical terrestrial wildlife habitat. Disturbance of both the Otter Point wetland and a measurable portion of the Lewis and Clark River itself.

Duration:
• **Short-Term—**Complete disturbance recovery in less than five years.
• **Long-Term**—Disturbance recovery requiring more than five years to return to pre-disturbance levels.

Alternative Action 1- No Action

Impact Analysis: The No Action alternative leaves the existing wetland unchanged. Limited habitat value of the degraded wetland would persist, with the exception of seasonal habitat to Roosevelt elk. There would also be no restoration of biologically valuable tidal wetland habitat.

Cumulative Impacts: This alternative would have minor long-term negative impacts due to perpetuation of low value habitat.

Conclusion: Alternative 1 would have minor long-term negative effects on fish and wildlife.

Impairment: There would be no impairment of the park's wildlife as a result of the No Action alternative.

Alternative Action 2- Active Restoration of Tidal Wetlands at Otter Point

Impact Analysis: Activities associated with Alternative 2 entail actively restoring 21 acres of estuarine wetland habitat and increasing overall habitat diversity throughout the entire 33.5 acre wetland site. 4,952 feet of off-channel estuarine habitat would be recreated, while also conserving Roosevelt elk habitat. Elk would experience minor long-term benefits from more nutrient-rich forage at the site. Increased edge habitat created would also benefit birds and smaller mammals native to the region. Minor short-term effects may occur due to displacement of elk during construction.

Cumulative Impacts: The cumulative effect of this alternative would result in major long-term habitat benefits for a variety of terrestrial and aquatic species at Otter Point. It may also result in minor short-term adverse effects due to elk displacement during construction.

Conclusion: The active restoration alternative would have major long-term positive impacts for wetland dependant wildlife at Otter Point, and minor short-term negative effects on elk during construction.

Impairment: There would be no impairment of the park's wildlife as a result of Alternative 2.

Threatened and Endangered Species

Methodology

On-site fish presence data from the mainstem of the Lewis and Clark River, as well as fish presence monitoring data from proximate tidal wetlands and available research on the Columbia River Estuary was used to estimate the effects of the proposed actions on threatened and endangered species. Fish presence surveys from the South Clatsop Slough Restoration site, located just upstream of the Otter Point wetland, indicated a dramatic increase in the number of juvenile salmonids utilizing the habitat after the completion of the 44 acre wetland restoration. Not only did the monitoring data reveal a 10-fold increase in the number of individual salmonids surveyed, salmonid species diversity also increased from 2 species to 5. Similar results would be expected following completion of Phase II of the Active Restoration method. However, no impact to threatened or endangered species is anticipated from Phase I implementation activities.

Thresholds for Intensity, Duration, and Type of Impact:

• **Negligible—**Threatened and Endangered species would not be affected or the effects would be at or below the level of detection, would be short-term, and the changes would be so slight that they would not be of any measurable or perceptible consequence to the wildlife species' population.

• **Minor—**Disturbance of native terrestrial and/or aquatic habitat for threatened and endangered species would be limited to one acre or less for terrestrial communities and to highly localized areas along length of the Lewis and Clark River.

• **Moderate—**Disturbance of regionally typical native terrestrial and/or aquatic habitat fore threatened and endangered species would occur. The area of disturbance would be from over one to five acres of terrestrial habitat and the localized areas along the length of the Otter Point wetland from the point of construction disturbance to the Lewis and Clark River.

• **Major—**Disturbance of more than five acres of regionally typical terrestrial habitat for threatened and endangered species. Disturbance of both the Otter Point wetland and a measurable portion of the Lewis and Clark River itself.

Duration:

• **Short-Term—**Complete disturbance recovery in less than five years.

• **Long-Term**—Disturbance recovery requiring more than five years to return to pre-disturbance levels.

Alternative 1- No Action

Impact Analysis: Under the No Action alternative, conditions of the existing wetland would remain unchanged. No increase of off-channel salmonid refugia would be reestablished, and therefore the requirements of the 2008 Biological Opinion for the Federal Columbia River Power System would not be met.

Cumulative Impacts: This alternative would result in minor long-term negative impacts to threatened and endangered species due to continued lack of adequate salmonid habitat.

Conclusion: The No Action alternative would result in minor long-term negative effects to threatened and endangered species that would continue to contribute to the decline of salmon populations in the Lower Columbia River basin.

Impairment: There would be no impairment to threatened and endangered species from the No Action alternative.

Alternative 2- Active Restoration of Tidal Wetlands at Otter Point

Impact Analysis: Activities associated with Alternative 2 would involve restoring approximately 8 acres of off-channel juvenile salmonids habitat in the Lower Columbia River Estuary. Off-channel habitat would be enhanced by installation of large woody debris to provide in stream complexity and cover from predation. Riparian plantings would provide shade cover and potential for inputs of macrodetritus. Minor short- term adverse impacts during construction would be mitigated using soil plugs, erosion control methods and revegetating disturbed areas of the site. Phase I construction activities will have no effect on threatened and endangered species. NPS will conduct a biological assessment of the site prior to Phase II implementation as part of the Endangered Species Act Section 7 Consultation.

Cumulative Impacts: Alternative 2 would result in major long- term beneficial impacts to threatened and endangered species as a result of increased off-channel habitat for salmonids. Potential minor short-term adverse effects would be mitigated.

Conclusion: Alternative 2 would result in major long- term positive effects for threatened and endangered species. Minor short-term negative effects would be mitigated to minimize stress to threatened and endangered species.

Impairment: There would be no impairment to threatened and endangered species from the restoration alternative.

Historic and Cultural Resources

Methodology

During the design phase of this project, an archeological technician conducted phase I of the cultural resources survey, which was included in the phase I design documents. Later, in the summer of 2010, a full archeological study was conducted at Otter Point as part of the Section 106 documentation. These studies were utilized in evaluating the effects of the

alternatives on the historic and cultural resources of the Fort Clatsop Unit of the Lewis and Clark National Historical Park.

Thresholds for Intensity, Duration, and Type of Impact:
• **Negligible** - Impact is at the lowest levels of detection, barely perceptible, and not measurable.
• **Minor - Adverse**: Disturbance of archeological site(s) and/or alteration of a pattern(s) or feature(s) of the landscape results in little, if any, loss of integrity. The determination of effect for Section 106 would be *no adverse effect*. **Beneficial**: Maintenance and preservation of an archeological site(s). For Cultural Landscapes, landscape patterns and preservation of an archeological site(s). For Cultural Landscapes, landscape patterns and features preserved in accordance with the Secretary of the Interior's Standards for the Treatment of Historic Properties with Guidelines for the Treatment of Cultural Landscapes. The determination of effect for Section 106 would be *no adverse effect*.
• **Moderate - Adverse**: Disturbance of archeological sites(s) and/or alteration of a pattern(s) or feature(s) of the landscape would result in an overall loss of integrity. The determination for Section 106 would be adverse effect. A memorandum of agreement is executed among NPS and applicable state or tribal historic preservation officer and, if necessary, the Advisory Council on Historic Preservation in accordance with 36CFR 800.6(b). Measures identified in the MOA to minimize or mitigate adverse impacts reduce the intensity of impact under NEPA from major to moderate. **Beneficial**: Stabilization of a site and/or rehabilitation of a landscape or its patterns and features in accordance with the *Secretary of the Interior's Standards for the Treatment of Historic Properties with Guidelines for the Treatment of Cultural Landscapes*. The determination of effect for Section 106 would be *no adverse effect*.
• **Major - Adverse**: Disturbance of archeological site(s) and/or alteration of a pattern(s) or feature(s) of the landscape would result in an overall loss of integrity. The determination of effect for Section 106 would be *adverse effect*. Measures to minimize or mitigate adverse impacts cannot be agreed upon and NPS and applicable state or tribal historic preservation officer and/or Advisory council are unable to negotiate and execute a memorandum of agreement in accordance with 36CFR800.6(b). **Beneficial**: Active intervention to preserve a site and/or restore a landscape or its patterns and features in accordance with the *Secretary of the Interior's Standards for the Treatment of Historic Properties with Guidelines for the Treatment of Cultural Landscapes*. The determination of effect for Section 106 would be *no adverse effect*.

Duration:
• **Short-Term -** Disturbance only during construction activities.
• **Long-Term** - Disturbance lasting longer than construction activities.

Alternative 1- No Action

Impact Analysis: Under this alternative, activities that are currently taking place at the Otter Point site would continue into the future. Although these actions would not adversely affect the historic and cultural resources at Otter Point, they would not satisfy the goals set in the park's General Management Plan to recreate the historic riverine setting of Fort Clatsop.

Cumulative Impacts: The No Action alternative would not adversely impact the historic and cultural resources at Otter Point. There would be no adverse disturbance of

archeological sites or alterations to landscape features. However, there would also be no rehabilitation of the landscape features.

Conclusions: This alternative would have negligible long-term negative impacts on historic and cultural resources due to its failure to recreate the historic riverine setting of Fort Clatsop.

Impairment: There would be no impairment to cultural resources as a result of Alternative 1.

Alternative 2- - Active Restoration of Tidal Wetlands at Otter Point

Impact Analysis: Pedestrian surveys of the project site did not yield pre-Contact or historic sites within the current project areas. No historical properties, cultural features, artifacts, or modern refuse were identified during either pedestrian or subsurface survey investigations. Archival research does not locate any historical structures within the Otter Point project area. Therefore, data obtained during archaeological reconnaissance survey indicates that the project as proposed will have **no adverse effect** on historic properties, and may proceed as planned (Horton 2010: 49). However, an archeological monitor would be on site during all ground disturbing activities that exceed depths of 35 inches. Furthermore, NPS follows the standard operating procedure that mandates a cessation of all work, and immediate contact of the State Historic Preservation Office, if anthropogenic materials are encountered.

Cumulative Impacts: The cumulative effect of this alternative would create moderate long-term beneficial impacts at the proposed site due to rehabilitation of natural features. Measures are in place to avoid impairments that might occur due to discovery of anthropogenic materials.

Conclusions: This alternative would have moderate long-term positive impacts on the historic and cultural resources at Otter Point.

Impairment: Alternative 2 would not result in impairment to cultural resources

Visitor Use and Experience

Methodology

Personal observation of what is available to visitors under current management combined with information obtained from NPS personnel on visitation patterns, and applicable research were used to estimate the effects of the actions in the various alternatives.

Thresholds for Intensity, Duration, and Type of Effect:

• **Negligible—**Visitors would not likely be aware of the effects associated with changes proposed for visitor use and enjoyment of park resources.

• **Minor—**Visitors would likely be aware of the effects associated with changes proposed for visitor use and enjoyment of park resources; however the changes in visitor use and experience would be slight and likely short term. Other areas in the park would remain available for similar visitor experience.

• **Moderate—** Visitors would be aware of the effects associated with changes proposed for visitor use and enjoyment of park resources. Changes in visitor use and experience would be readily apparent and likely long term. Some visitors who desire to continue their chosen activity would be required to pursue their choice in other available local or regional areas.
• **Major—** Visitors would be highly aware of the effects associated with changes proposed for visitor use and enjoyment of park resources. Changes in visitor use and experience would be readily apparent and long term. The change in visitor use and experience proposed in the alternative would preclude future generations of some visitors from enjoying park resources and values. Some visitors who desire to continue their chosen activity would be required to pursue other available local or regional areas.

Duration:
• **Short-Term —** During construction
• **Long-Term** — Past construction and 10 years into future.

Alternative 1- No Action

Analysis: No changes to the existing site would occur. The current experience for kayakers, hikers and other park visitors would remain the same.

Cumulative Impacts: There would be no cumulative impacts to visitor use and experience as a result of this alternative.

Conclusion: Alternative 1 would result in negligible long-term negative effects on visitor use and experience due to the perpetuation of disturbed wetland conditions.

Alternative 2- Active Restoration of Tidal Wetlands at Otter Point

Impact Analysis: Construction of this project would not temporarily exclude park visitors from previously accessible park amenities. Construction efforts may temporarily impact the viewshed of the area, thereby creating negligible short- term adverse effects. However, this alternative would create opportunities to use the project as an educational tool and provide future capacity for trail expansion with the Warrenton Trail system.

Cumulative Impacts: Cumulatively, this alternative would be moderate long-term beneficial impacts.

Conclusion: The active restoration alternative would create negligible short-term adverse impact, while in contrast creating moderate long-term beneficial impacts on visitor use and experience.

Land Use

Methodology

On-site observation combined with detailed engineering and meticulous hydrological modeling was used to evaluate if the proposed alternatives would be compatible with the land uses of adjacent properties.

Thresholds for Intensity, Duration, and Type of Effect:
• **Negligible**—Changes to site conditions would be barely detectable and create no noticeable difference in for adjoining land uses.
• **Minor—**On-site functions would change to some extent but not unduly impact neighboring land uses. Changes would be unlikely to adversely affect the land use functions.
• **Moderate—** There would be noticeable changes in terms of land use. Measures to correct the altered functions may need to be implemented in response to such changes.
• **Major—** Changes would be substantial in all areas of land use function.

Duration:
• **Short-Term**—one-time finite definitive changes occur due to construction and/or modification. Once tasks are completed--- land use functions return pre-existing conditions.
• **Long-Term**—changes which are instituted that alter neighboring land use functions are expected to remain in effect 5 or more years.

Alternative 1- No Action

Impact Analysis: Existing conditions of the property directly adjacent to Otter Point were evaluated and compared with the conditions predicted in the hydraulic and hydrologic modeling conducted to estimate the impacts of the proposed alternatives. Alternative 1 would not change the existing conditions of either the Otter Point site, or the adjacent property.

Cumulative Impacts: There cumulative impacts to land use as a result of this alternative would be negligible.

Conclusion: Alternative 1 would result in negligible long-term negative impacts on land use due to the continuation of ponding conditions on the neighboring pasture.

Alternative 2- Active Restoration of Tidal Wetlands at Otter Point

Impact Analysis: Actions proposed as part of Alternative 2 include adding an additional culvert and tide gate to drain the neighboring pastureland. Currently, there is only one drainage outlet. A crown in the middle of the field isolates water on the western portion of the field from this drainage outlet. As a result, there is ponding in the western corner of the pasture. Installation of an additional culvert and tide gate in the western corner of the property would eliminate ponding in the field in most conditions. However, construction activities may create minor short-term adverse effects from excavation activities along the border of the neighboring property that would require temporary removal of the existing culvert.

Cumulative Impacts: The cumulative impact of Alternative 2 would be minor long- term beneficial impacts.

Conclusion: Alternative 2 would result in minor long- term positive effects to land use. However, there is also a potential for minor short- term negative effects on drainage and

land use during construction when the realigned dike being constructed and the culverts and tide gates are being installed.

Consultation and Coordination

The Scoping Process

The NPS interdisciplinary team conducted multiple internal scoping meetings throughout the proposed project's inception from 2008 to 2010 at the Fort Clatsop Unit of the Lewis and Clark National Historical Park. The scoping was conducted to identify purpose and need for wetland restoration actions, establish objectives and goals for restoration, inventory an initial array of possible restoration techniques and methods for consideration, identify key environmental issues and analysis topics, and set screening and evaluation criteria against which method effectiveness would be judged and impacts would be analyzed.

On June 16, 2010, NPS notified local, state, and federal agencies, other interested organizations, and the general public of the proposed actions at Otter Point through a public scoping letter. This letter was posted on the National Park Service's website, and mailed out to individuals and groups on the park's mailing list. In addition, a news release was sent out on June 16, 2010 announcing the public and agency scoping meetings on Thursday June 24, 2010.

Agency and Tribal Consultation and Coordination

U.S. Fish and Wildlife Service and NOAA Fisheries

Section 7 of the ESA, Interagency Cooperation, is the process used to ensure that the actions taken by federal agencies do not jeopardize the existence of any listed species. This process is intended to involve the identification and resolution of species conflicts in the early stages of project planning. NPS will coordinate with NOAA Fisheries and USFWS regarding federally listed species that occur within the Fort Clatsop Unit of the Lewis and Clark National Historical Park and that may be affected by the proposed actions of this environmental assessment. All communication between agencies will occur through written letters and other NPS-established channels of communication.

U.S. Army Corps of Engineers

A joint permit application for Phase I of the Otter Point Restoration was applied for in order to perform work on USACE regulated property. Furthermore, USACE levee safety program manager provided guidance for levee design specifications during the design and scoping process. USACE will continue to be closely involved throughout the Otter Point project implementation through Phase I, the 408 process and throughout Phase II when the dikes are breached.

Oregon Department of State Lands

A joint permit application for fill and removal activities was also submitted to ODSL to gain consent to work within the submersed and submersible lands of the State of Oregon. ODSL approved the permit application on July 7, 2010.

Youngs Bay Watershed Council

The Youngs Bay Watershed Council was involved with the Otter Point project since its inception. The watershed council coordinator assisted NPS in obtaining grant funding as well as permits.

Region State and Tribal Historic Preservation Officers

The NPS initiated the Section 106 consultation in June 2010, when they sent a letter to Oregon SHPO with the findings of their archeological survey. NPS also offered consultations with the Clatsop-Nehalem Confederated Tribes, Confederated Tribes of Siletz Indians, Confederated Tribes of the Grand Ronde and the Chinook Indian Nation. NPS will continue to consult with the Oregon SHPO, tribes, and interested parties, if appropriate, as part of its ongoing compliance with Section 106 consultation. NPS will undertake consultation through its established communication channels and practices. Copies of all NEPA documents and studies performed specifically in compliance with Section 106 will be provided to SHPO, tribes, and interested parties for review and comment.

City of Warrenton, Oregon

The City of Warrenton provided comment during the DSL removal/ fill permit public comment period, as well as during the scoping process. NPS will continue to work with the City of Warrenton to ensure that consensus is reached between both parties on all design aspects of the Otter Point Restoration project.

Supporting Compliance

In addition to the compliance actions previously listed in this chapter, NPS will also have to obtain permits to conduct restoration actions through the Department of State Lands, Army Corps of Engineers and Clatsop County.

Individuals conducting work that involves removal or filling in any waters of the State of Oregon is required to complete a Joint Permit Application. This application activates the permitting process for a removal/ fill permit from the Oregon Department of State Lands and several federal regulatory programs through the U.S. Army Corps of Engineers. Federal laws that are included within the Army Corps permit are Section 10 of the Rivers and Harbors Act, and Section 404 of the Clean Water Act.

Grading of lands located outside of city limits or urban growth boundaries in Clatsop County, Oregon requires obtaining a county development permit. This permit verifies that the proposed work is a permitted use in the zone.

As previously mentioned, in the Planning Issues and Concerns section of Chapter 1, restoration alternatives that involve altering an existing flood protection structure are required to undergo the Federal Section 408 process in order to determine that the proposed modifications will not impact the intended use of the structure. This process requires providing the following information in order to obtain approval:

1. A written request by the non-federal interests for approval of the project modification/ alteration
2. A physical and functional description of the existing project.
3. A detailed description of the proposed modification.
4. The purpose/ need for the modification.

5. A description of any related, ongoing Corps studies/ efforts in the watershed.
6. A public interest determination.
7. Appropriate NEPA documentation.
8. Any Administrative Record.
9. A discussion of indirect effects.
10. A discussion of E.O. 11988 Considerations
11. Technical Analysis

Following the completion of the public interest determination and technical analyses regarding the impact of the proposed modification on the usefulness of the project, the Corps District Engineer will make a recommendation through the Division Commander to the Chief of Engineers for his consideration and approval under the 33 USC 408.

Distribution List

To inform the public of the availability of the environmental assessment, NPS distributed a letter to various agencies, tribes, and organizations, and published a press release in the local newspaper. Below is a list of agencies and organizations who received a letter announcing the availability of the environmental assessment. Copies of the environmental assessment were provided to interested individuals, upon request. Copies of the document were also available for review at the Astoria Public Library, the Warrenton Community Library, the library within the Lewis and Clark National Historical Park and on the internet at http://parkplanning.nps.gov/lewi.

The environmental assessment is subject to a 30-day public comment period. During this time, the public is encouraged to submit their written comments to the National Park Service address provided at the beginning of this document.

Army Corps of Engineers
Oregon Department of State Lands
U.S. Fish and Wildlife Service
Oregon Department of Fish and Wildlife
Oregon State Parks
Oregon Department of Forestry
Oregon State Historic Preservation Office
Clatsop-Nehalem Confederated Tribes
Confederated Tribes of Siletz Indians
Confederated Tribes of the Grand Ronde
Chinook Indian Nation
Clatsop County Diking District #11
Clatsop County
City of Astoria, Oregon
City of Warrenton, Oregon
Youngs Bay Watershed Association

List of Preparers and Contributors

Madeline Dalton- Coordinator
North Coast Watershed Association

April Cameron-Biologist/Ecologist
Columbia River Estuary Study Taskforce

Micah Russell- Director
Columbia River Estuary Study Taskforce

Carla Cole- Natural Resource Manager
National Park Service- Lewis and Clark National Historical Park

Nancy Eid- Biologist
National Park Service- Lewis and Clark National Historical Park

Amy Horstman- Columbia River Fisheries Program Office
United States Fish and Wildlife Service

Bruce Henderson- President
Henderson Land Services

Alan Whiting- Senior Ecosystem Planner
PC Trask and Associates Inc.

Heida Diefenderfer- Coastal Assessment and Restoration Senior Scientist
Pacific Northwest National Laboratories: Battelle

Army Corps of Engineers

Oregon Department of State Lands

April Silva- Wetlands Monitoring Specialist
Columbia River Estuary Study Taskforce

David Szymanski- Superintendent
National Park Service- Lewis and Clark National Historical Park

Zach Bolitho- Chief of Resources
National Park Service- Lewis and Clark National Historical Park

Jason Smith- Research Assistant
National Park Service- Lewis and Clark National Historical Park

Curtis Roegner- Chief Scientist
National Oceanic and Atmospheric Administration

Don Leach- Superintendent
Clatsop County Diking District #11

Amy Borde- Coastal Assessment and Restoration Senior Scientist
Pacific Northwest National Laboratories

Lee Cain- Upward Bound Project Leader
Astoria High School

Oregon Department of Fish and Wildlife

City of Warrenton, Oregon

References

Advisory Council on Historic Preservation. "800.6(b) Resolution of Adverse Effects." *Code of Federal Regulations- Title 36: Parks Forests and Public Property*. 2004.

Anchor Environmental, L.L.C. *Hydraulic Analysis Report Otter Point Restoration Project.* Bellingham: 2008. 3.

Behnke, Robert J. *Native Trout of Western North America*. 1. Bethesda: American Fisheries Society, 1992. 62.

Council on Environmental Quality (CEQ). 43 FR 55990. 1978.

Council on Environmental Quality (CEQ). *Memorandum for Federal NEPA Liaisons, Federal, State, and Local Officials and Other Persons Involved in the NEPA Process*. 1981.

Dawley, Earl M., et al. "Migrational Characteristics and Survival of Juvenile Salmonids Entering the Columbia Estuary during 1983." *Annual Report of Research*. 1984

Deur, Douglas, Ph.D. *Otter Point Restoration Site Preliminary Cultural/ Historical Assessment*. Cannon Beach: 2008.

Environmental Protection Agency. "1502.15 Affected Environment." *Code of Federal Regulations- Title 40: Protection of Environment*. 2005.

Environmental Protection Agency. "1508.8 Effects." *Code of Federal Regulations- Title 40: Protection of Environment*. 2005.

GeoDesign Inc. *Report of Geotechnical Engineering Services Otter Point Restoration Project*. Portland: 2010.

Henderson Land Services. *Otter Point Estuarine Habitat Restoration Project Design Summary*. Lake Oswego: 2010.

Horton, Elizabeth A. *Results of Archeological Survey for Otter Point Estuarine Enhancement and South Clatsop Slough Loop Pedestrian Trail*. Vancouver: National Park Service, 2010.

Pojar, Jim, and Andy MacKinnon. *Plants of the Pacific Northwest Coast*. Vancouver: Lone Pine, 2004. 370.

Johnson, David H. and Thomas O'Neil. *Wildlife-Habitat Relationships in Oregon and Washington*. Corvallis: Oregon State University Press, 2001. 768.

Lamb, Andy, and Phil Edgell. *Coastal Fishes of the Pacific Northwest*. Madeira Park: Harbor Publishing, 1986. 31-39.

Moulton, Gary E. "The Journals of the Lewis and Clark Expedition." *Cascades of Columbia River, Washington-Oregon, through Winter at Fort Clatsop, Oregon*. 6. 1990: 114.

National Oceanic and Atmospheric Administration. *Federal Columbia River Power System Biological Opinion*. 2008.

National Oceanic and Atmospheric Administration. Fisheries Office of Protected Resources. "Endangered Species Act". http://www.nmfs.noaa.gov/pr/laws/esa/.

National Oceanic and Atmospheric Administration. Fisheries Office of Protected Resources, "Species of Concern." http://www.nmfs.noaa.gov/pr/species/concern/.

National Oceanic and Atmospheric Administration. "Technical Memorandum, Updated Status of Federally Listed ESUs of West Coast Salmon and Steelhead June 2005" June 2005 http://www.nwr.noaa.gov/Publications/Biological-Status-Reviews/upload/SR2005-allspecies.pdf.

National Park Service. *Management Policies*. Washington, D.C.: National Park Service. 2006.

National Park Service. *Director's Order #12: Conservation Planning, Environmental Impact Analysis, and Decision Making*. U.S. Department of the Interior, National Park Service. 2001.

National Park Service. *Fort Clatsop National Memorial: General Management plan, Development Concept plan, and Final Environmental Impact Statement*. Astoria: National Park Service. 1995.

National Park Service. *NPS Reference Manual 77: National Resource Management Guidelines*. National Park Service. 1991. http://home.nps.gov/applications/npspolicy/DOrders.cfm.

National Park Service. "Roosevelt Elk." National Park Service. 2010. http://home.nps.gov/olym/naturescience/roosevelt-elk.htm

National Research Council. *Upstream: Salmon and Society in the Pacific Northwest*. Washington, D.C.: National Academy Press, 1996.

Office of Protected Resources - NOAA Fisheries. "Fish Species Protected Under the Endangered Species Act (ESA)". 2010-03-05. http://www.nmfs.noaa.gov/pr/species/esa/fish.htm.

Spaulding, Kenneth A. (ed.). *On the Oregon Trail: Robert Stuart's Journey of Discovery*. Norman: University of Oklahoma Press. 1953: 28.

U.S. Army Corps of Engineers. "Final Environmental Impact Statement." *Columbia River at the Mouth, Oregon and Washington*. 1983.

U.S. Army Corps of Engineers. "Clarification Guidance on the Policy and Procedural Guidance for the Approval of Modifications and Alterations of Corps of Engineers Projects." 2008.

U.S. Coast Survey. "Columbia River at Young's River and Lewis and Clark River." Survey Map No. 793. Washington, D.C.: U.S. Coast Survey. 1876.

United States of America. *National Environmental Policy Act of 1969*. Section 101(b).

United States of America. "Executive Order 12898- Federal Actions To Address Environmental Justice in Minority Populations and Low-Income Populations." 1994.

United States Department of Agriculture. *Soil Survey of Clatsop County, Oregon*. 1984.

Office of Protected Resources - NOAA Fisheries. "Fish Species Protected Under the Endangered Species Act (ESA)". 2010-03-05. http://www.nmfs.noaa.gov/pr/species/esa/fish.htm.

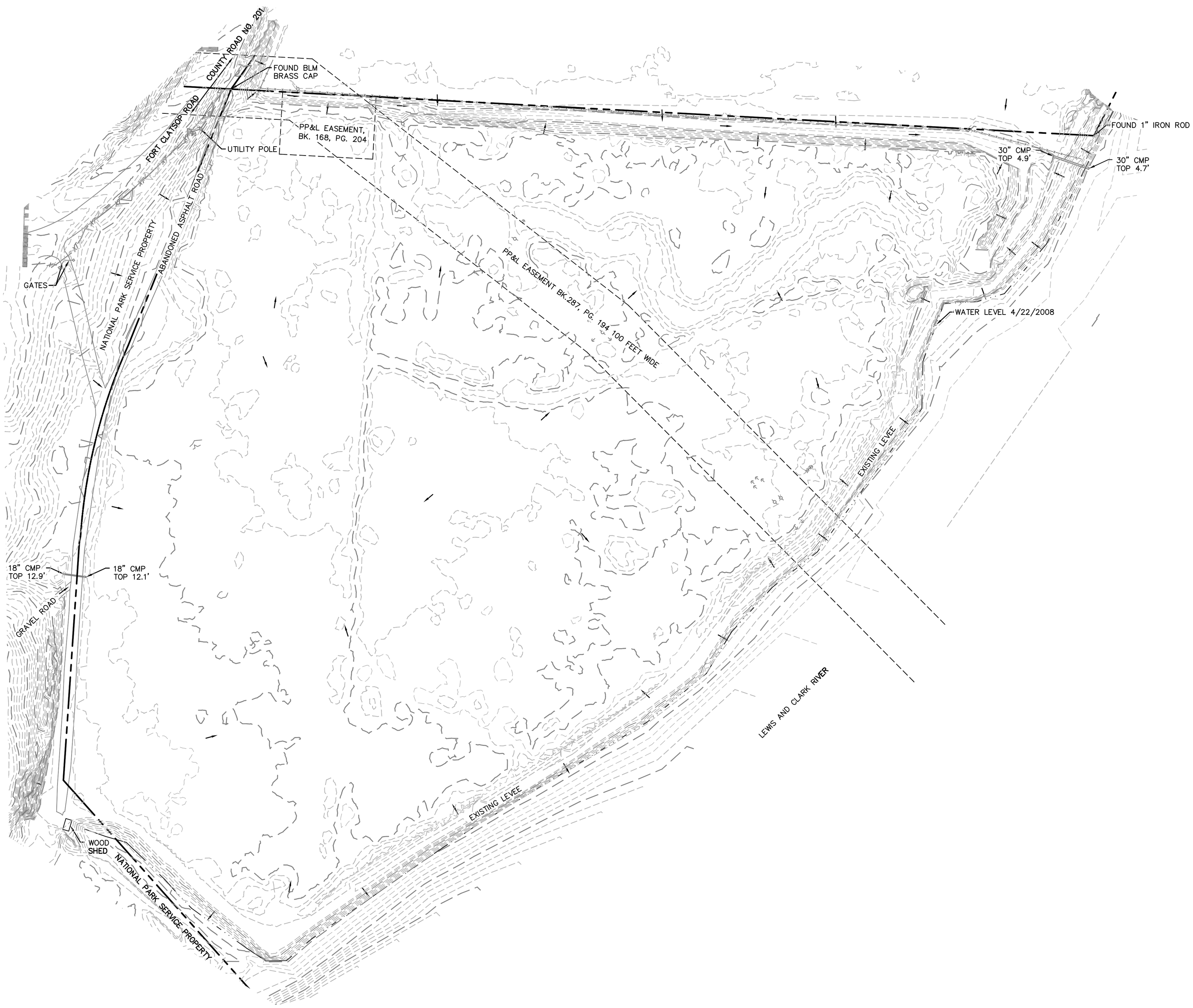

N

80 0 40 80 160

1 inch = 80 ft.

LEGEND

- EXISTING PROPERTY LINE/ROW
- EXISTING EASEMENT
- EXISTING WATER LEVEL
- XT — EXISTING UNDERGROUND ELECTRIC/TELEPHONE LINE
- X — EXISTING FENCE
- 185 — EXISTING 5 FT. CONTOUR INTERVAL
- 184 — EXISTING 1 FT. CONTOUR INTERVAL
- DIRECTION OF STORM WATER FLOW

THE CONTRACTOR SHALL FIELD VERIFY THE SIZE, LOCATION & DEPTH OF EXISTING UTILITIES PRIOR TO CONSTRUCTION NOTIFY ENGINEER OF ANY DISCREPANCIES PRIOR TO COMMENCING CONSTRUCTION

HENDERSON LAND SERVICES LLC
200 North State Street, Ste. #103
Lake Oswego, Oregon 97034
telephone (503) 699-8999
facsimile (503) 699-8777

EXISTING CONDITIONS PLAN

OTTER POINT RESTORATION PROJECT - CONSTRUCTION DOCUMENT PLAN SET

DATE:	5/21/2010
DRAWN BY:	KMH
PROJ. MGR:	BAH
CHECKED BY:	WJK
PROJECT NUMBER	CREST 08-01
CASE FILE NUMBER	

SHEET NUMBER C2 OF 15

MeyerD, Plotted: May 18, 2010 - 4:33pm, P:\HEN.005 CREST\dwg\Eng\Set\HEN.005-XCON.dwg

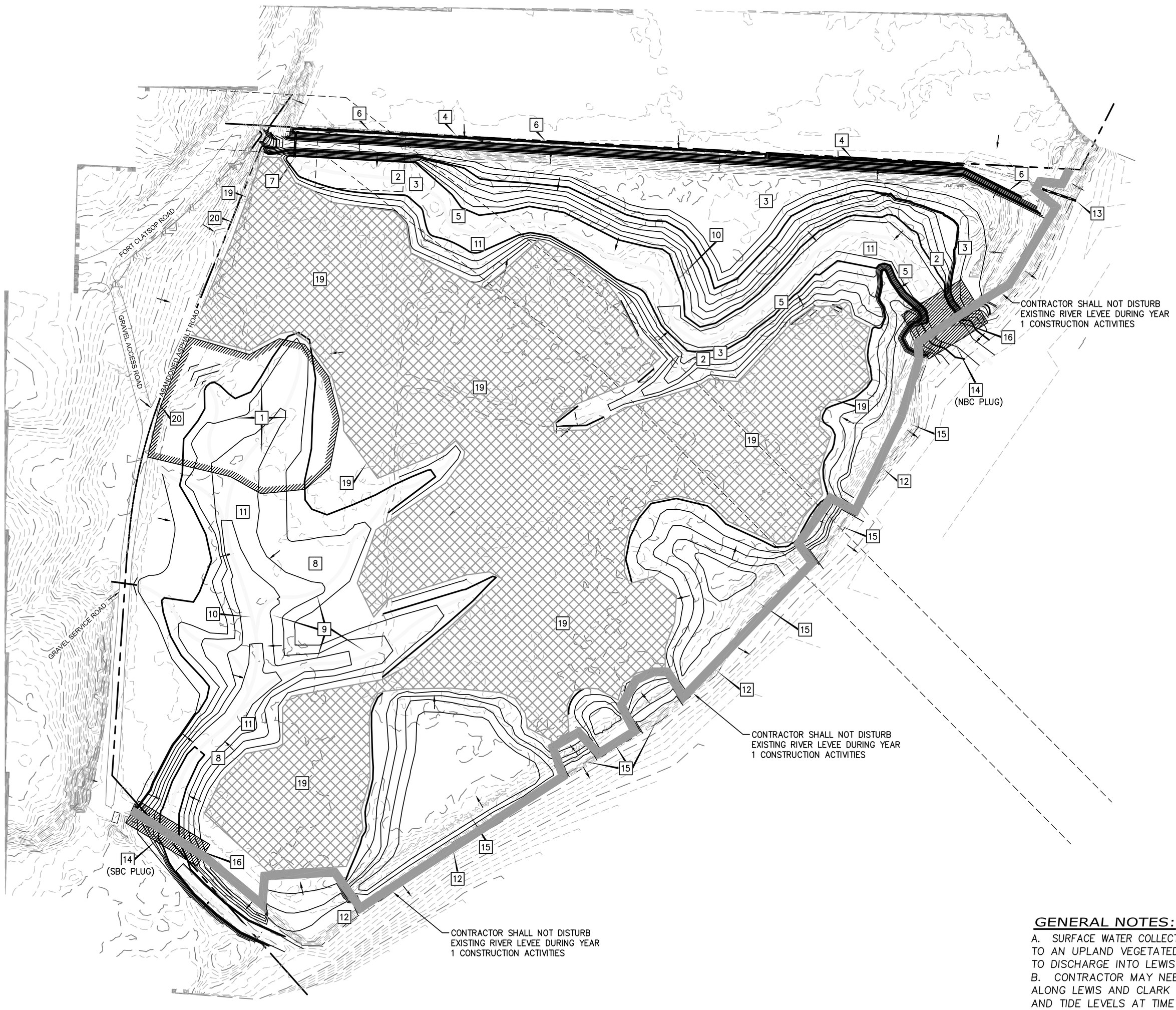

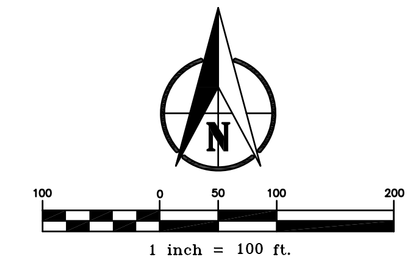

PROPOSED CONSTRUCTION SEQUENCING:

YEAR 1 CONSTRUCTION ACTIVITIES

1 ESTABLISH STAGING AREA, CLEAR AND INSTALL ESC AS NECESSARY.

2 CLEAR NORTH BACKWATER CHANNEL. DO NOT DISTURB NORTH BACKWATER CHANNEL SOIL PLUG (EXISTING LEVEE).

3 INSTALL ESC IN NORTH BACKWATER CHANNEL. GRUB NORTH BACKWATER CHANNEL AREA.

4 ESTABLISH TEMPORARY HAUL ROAD ALONG NORTH LEVEE ALIGNMENT. INSTALL ESC ALONG NORTH PROJECT BOUNDARY,

5 EXCAVATE NORTH BACKWATER CHANNEL. SCREEN AND DRY MATERIAL AS PER SPECIFICATIONS ADJACENT TO NORTH LEVEE. LEAVE NORTH BACKWATER CHANNEL SOIL PLUG. DO NOT DISTURB EXISTING RIVER LEVEE AND BANK DURING ANY YEAR ONE SITE ACTIVITIES.

6 CONSTRUCT NORTH LEVEE WITH SCREENED NORTH BACKWATER CHANNEL FILL MATERIAL, AS APPROVED BY THE PROJECTS GEOTECHNICAL ENGINEER.

7 INSTALL TRASH RACK, CULVERT, AND TIDE GATE. SEE SHEET C11 FOR DETAIL.

8 CLEAR SOUTH BACKWATER CHANNEL AND INSTALL ESC MEASURES. DO NOT DISTURB SOUTH BACKWATER CHANNEL SOIL PLUG AND EXISTING RIVER LEVEE.

9 EXCAVATE SOUTH BACKWATER CHANNEL BEHIND SOUTH BACKWATER CHANNEL SOIL PLUG. PROCESS AND HAUL MATERIAL FOR NORTH LEVEE COMPLETION AS NECESSARY. INSTALL ESC MEASURES, SEED AND STRAW MULCH IMMEDIATELY AFTER COMPLETION OF EXCAVATION AREAS.

10 INSTALL LARGE WOODY DEBRIS AS PER PLANS/SPECIFICATIONS IN NORTH BACKWATER CHANNEL AND SOUTH BACKWATER CHANNEL.

11 STABILIZE, SEED AND STRAW MULCH ALL DISTURBED AREAS FOLLOWING YEAR 1 SITE ACTIVITIES.

YEAR 2 CONSTRUCTION ACTIVITIES

12 ESTABLISH TEMPORARY HAUL ROAD ALONG EXISTING FRONTAGE WITH LEWIS AND CLARK CHANNEL LEVEE.

13 REMOVE EXISTING CULVERT AND TIDE GATE AND INSTALL NEW TRASH RACK, CULVERT, AND TIDE GATE. SEE SHEET C11 FOR DETAIL.

14 REMOVE NORTH BACKWATER CHANNEL AND SOUTH BACKWATER CHANNEL SOIL PLUGS.

15 EXCAVATE LEVEE BREACHES ALONG EXISTING LEVEE FROM NORTH TO SOUTH. PLACE AND COMPACT FILL AS PER SPECIFICATIONS ADJACENT TO BREACHES. INSTALL ESC MEASURES, SEED AND STRAW MULCH IMMEDIATELY AFTER COMPLETION OF EXCAVATION AREAS.

16 INSTALL ANY REMAINING LARGE WOODY DEBRIS AS PER PLANS/SPECIFICATIONS IN NORTH BACKWATER CHANNEL AND SOUTH BACKWATER CHANNEL PLUG LOCATIONS.

17 STABILIZE, SEED AND STRAW MULCH ALL DISTURBED AREAS FOLLOWING YEAR 2 SITE ACTIVITIES.

18 INSTALL PLANTS PER PLANTING PLAN. SEE SHEET C12 AND C12A.

19 AREA OF EXCLUSION. NO WORK SHALL BE CONDUCTED IN THIS AREA WITHOUT PRIOR AUTHORIZATION FROM CREST OR HENDERSON LAND SERVICES.

20 EXISTING ASPHALT ACCESS RD TO BE USED AS A TEMPORARY HAUL AND ACCESS ROAD TO NORTH BACKWATER CHANNEL AND BERM.

GENERAL NOTES:

A. SURFACE WATER COLLECTED BEHIND SOIL PLUGS IS TO BE PUMPED TO AN UPLAND VEGETATED AREA. TURBID WATER IS NOT PERMITTED TO DISCHARGE INTO LEWIS AND CLARK RIVER.

B. CONTRACTOR MAY NEED TO INSTALL FLOATING TURBIDITY CURTAIN ALONG LEWIS AND CLARK RIVER AS NECESSARY DEPENDING ON WATER AND TIDE LEVELS AT TIME OF CONSTRUCTION.

LEGEND

- EXISTING PROPERTY LINE/ROW
- EXISTING EASEMENT
- EXISTING WATER LEVEL
- XT — EXISTING UNDERGROUND ELECTRIC/TELEPHONE LINE
- EXISTING FENCE
- 185 — EXISTING 5 FT. CONTOUR INTERVAL
- 184 — EXISTING 1 FT. CONTOUR INTERVAL
- DIRECTION OF STORM WATER FLOW
- 185 — PROPOSED 5FT. CONTOUR INTERVAL
- 184 — PROPOSED 1FT. CONTOUR INTERVAL
- PROPOSED SEDIMENT FENCE
- AREA OF EXCLUSION

HENDERSON LAND SERVICES LLC
200 North State Street, Ste. #103
Lake Oswego, Oregon 97034
telephone (503) 699-8999
facsimile (503) 699-8777

CONSTRUCTION SEQUENCING PLAN

OTTER POINT RESTORATION PROJECT – CONSTRUCTION DOCUMENT PLAN SET

REGISTERED PROFESSIONAL ENGINEER 72848PE OREGON JULY 15, 2003 WILLIAM J. KEIRLI RENEWAL 6/30/11

DATE:	5/21/2010
DRAWN BY:	KMH
PROJ. MGR:	BAH
CHECKED BY:	WJK
PROJECT NUMBER	CREST 08–01
CASE FILE NUMBER	

SHEET NUMBER C3 OF 15

MeyerD, Plotted: May 20, 2010 – 11:40am, P:\HEN.005 CREST\dwg\Eng\Set\HEN.005-SEQ.dwg

LEGEND

- EXISTING PROPERTY LINE/ROW
- EXISTING EASEMENT
- EXISTING WATER LEVEL
- EXISTING UNDERGROUND ELECTRIC/TELEPHONE LINE
- EXISTING FENCE
- EXISTING 5 FT. CONTOUR INTERVAL
- EXISTING 1 FT. CONTOUR INTERVAL
- DIRECTION OF STORM WATER FLOW
- PROPOSED 5FT. CONTOUR INTERVAL
- PROPOSED 1FT. CONTOUR INTERVAL
- PROPOSED SEDIMENT FENCE

GENERAL SITE GRADING NOTES:

ALL PROPOSED EXCAVATION AND EMBANKMENT WORK SHALL BE DONE UNDER THE GUIDANCE OF THE GEOTECHNICAL ENGINEER INCLUDING BUT NOT LIMITED TO THE FOLLOWING ITEMS:

A. DETERMINATION OF THE DEPTH OF MATERIAL TO BE REMOVED.
B. GEOMETRY OF BENCHING WITH RESPECT TO THE SITE SLOPE.
C. PLACEMENT OF FILL MATERIAL INCLUDING THE DEGREE OF COMPACTION REQUIRED.
D. REVIEW AND APPROVAL OF MEANS AND MECHANISM FOR DISCHARGING SUBSURFACE AND SURFACE WATER TO PROTECT THE SLOPE.
E. REVIEW OF ALL EXCAVATED MATERIAL TO ENSURE EXCAVATED MATERIAL DOES NOT CONTAIN LARGE ORGANIC DEBRIS. IF DEEMED NECESSARY BY GEOTECHNICAL ENGINEER, EXCAVATED MATERIAL SHALL BE SCREENED UNDER HIS/HER DIRECTION.

AREA OF DISTURBANCE

TOTAL DISTURBANCE = 25.41 AC

EARTHWORK QUANTITY

CUT = 25,546 CY
FILL = 40,865 CY
STRIPPINGS FILL = 15,319 CY
STRIPPINGS EXPORT = 17,255 CY

THE CONTRACTOR SHALL FIELD VERIFY THE SIZE, LOCATION & DEPTH OF EXISTING UTILITIES PRIOR TO CONSTRUCTION NOTIFY ENGINEER OF ANY DISCREPANCIES PRIOR TO COMMENCING CONSTRUCTION

NORTH BACKWATER CHANNEL CENTERLINE ELEVATION TABLE

CHANNEL C/L STA:	EL. @ CENTERLINE	CHANNEL C/L STA:	EL. @ CENTERLINE
0+00	4.00	10+50	4.38
0+50	4.00	11+00	4.44
1+00	4.00	11+50	4.51
1+50	4.00	12+00	4.58
2+00	4.00	12+50	4.64
2+50	4.00	13+00	4.71
3+00	4.00	13+50	4.77
3+50	4.00	14+00	4.84
4+00	4.00	14+50	4.90
4+50	4.00	15+00	4.97
5+00	4.00	15+19.07 (END)	5.00
5+50	4.00		
6+00	4.00		
6+50	4.00		
6+84.64 (BRANCH TEE)	4.00		
7+00	4.00		
7+50	4.00		
8+00	4.05		
8+50	4.12		
9+00	4.18		
9+50	4.25		
10+00	4.31		

TYPICAL GRAVEL ROADWAY SECTION (LIGHT)
NOT TO SCALE

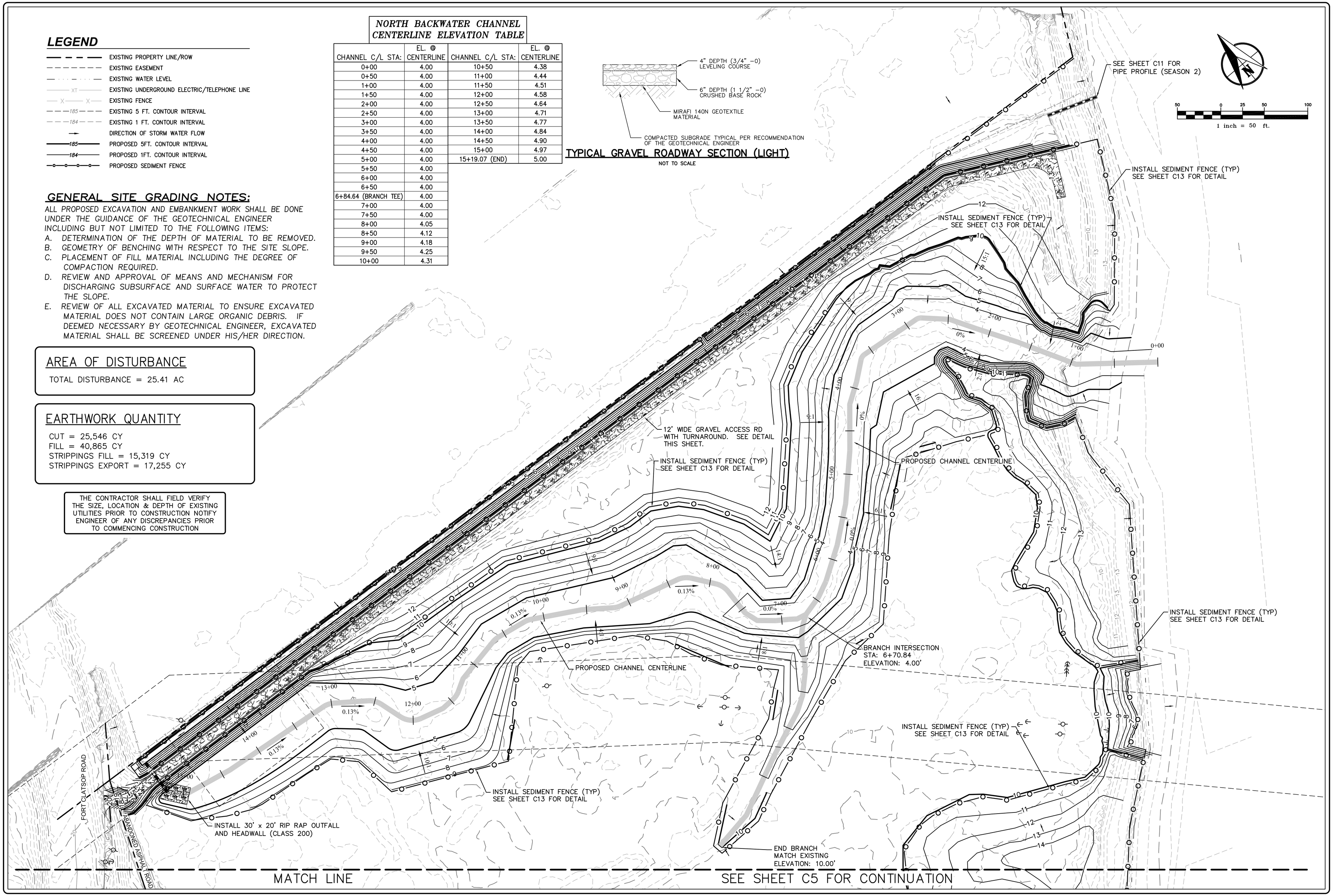

HENDERSON LAND SERVICES LLC
200 North State Street, Ste. #103
Lake Oswego, Oregon 97034
telephone (503) 699-8999
facsimile (503) 699-8777

GRADING / EROSION CONTROL PLAN
NORTHEAST
OTTER POINT RESTORATION PROJECT – CONSTRUCTION DOCUMENT PLAN SET

REGISTERED PROFESSIONAL ENGINEER 72848PE OREGON JULY 15, 2003 WILLIAM J. KEHRLI RENEWAL 6/30/11

DATE:	5/21/2010
DRAWN BY:	KMH
PROJ. MGR:	BAH
CHECKED BY:	WJK
PROJECT NUMBER	CREST 08-01
CASE FILE NUMBER	

SHEET NUMBER C4 OF 15

MeyerD, Plotted: May 18, 2010 – 4:25pm, P:\HEN.005 CREST\dwg\Eng\Set\HEN.005-GRD1.dwg

MATCH LINE

SEE SHEET C4 FOR CONTINUATION

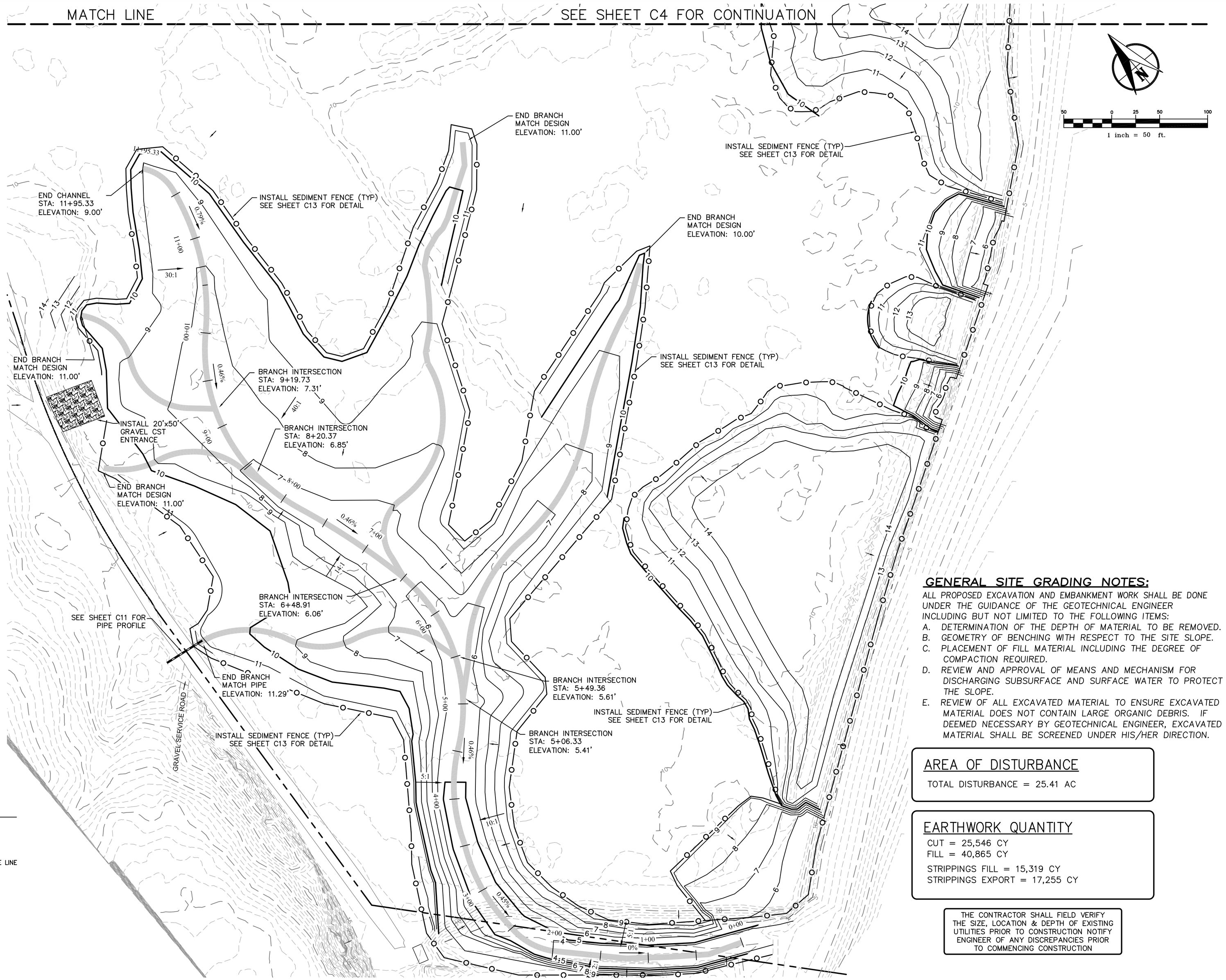

NORTH BACKWATER CHANNEL CENTERLINE ELEVATION TABLE

CHANNEL C/L STA:	EL. @ CENTERLINE
0+00	4.00
0+50	4.00
1+00	4.00
1+50	4.00
2+00	4.00
2+50	4.23
3+00	4.46
3+50	4.69
4+00	4.92
4+50	5.15
5+00	5.38
5+06.33 (BRANCH TEE)	5.41
5+49.36 (BRANCH TEE)	5.61
5+50	5.61
6+00	5.84
6+48.91 (BRANCH TEE)	6.06
6+50	6.07
7+00	6.31
7+50	6.53
8+00	6.76
8+20.37 (BRANCH TEE)	6.85
8+50	6.99
9+00	7.22
9+19.73 (BRANCH TEE)	7.31
9+50	7.59
10+00	7.68
10+50	7.91
11+00	8.24
11+50	8.64
11+95.33 (END)	9

LEGEND

- EXISTING PROPERTY LINE/ROW
- EXISTING EASEMENT
- EXISTING WATER LEVEL
- EXISTING UNDERGROUND ELECTRIC/TELEPHONE LINE
- EXISTING FENCE
- 185 EXISTING 5 FT. CONTOUR INTERVAL
- 184 EXISTING 1 FT. CONTOUR INTERVAL
- DIRECTION OF STORM WATER FLOW
- 185 PROPOSED 5FT. CONTOUR INTERVAL
- 184 PROPOSED 1FT. CONTOUR INTERVAL
- PROPOSED SEDIMENT FENCE

GENERAL SITE GRADING NOTES:

ALL PROPOSED EXCAVATION AND EMBANKMENT WORK SHALL BE DONE UNDER THE GUIDANCE OF THE GEOTECHNICAL ENGINEER INCLUDING BUT NOT LIMITED TO THE FOLLOWING ITEMS:

A. DETERMINATION OF THE DEPTH OF MATERIAL TO BE REMOVED.
B. GEOMETRY OF BENCHING WITH RESPECT TO THE SITE SLOPE.
C. PLACEMENT OF FILL MATERIAL INCLUDING THE DEGREE OF COMPACTION REQUIRED.
D. REVIEW AND APPROVAL OF MEANS AND MECHANISM FOR DISCHARGING SUBSURFACE AND SURFACE WATER TO PROTECT THE SLOPE.
E. REVIEW OF ALL EXCAVATED MATERIAL TO ENSURE EXCAVATED MATERIAL DOES NOT CONTAIN LARGE ORGANIC DEBRIS. IF DEEMED NECESSARY BY GEOTECHNICAL ENGINEER, EXCAVATED MATERIAL SHALL BE SCREENED UNDER HIS/HER DIRECTION.

AREA OF DISTURBANCE

TOTAL DISTURBANCE = 25.41 AC

EARTHWORK QUANTITY

CUT = 25,546 CY
FILL = 40,865 CY

STRIPPINGS FILL = 15,319 CY
STRIPPINGS EXPORT = 17,255 CY

THE CONTRACTOR SHALL FIELD VERIFY THE SIZE, LOCATION & DEPTH OF EXISTING UTILITIES PRIOR TO CONSTRUCTION NOTIFY ENGINEER OF ANY DISCREPANCIES PRIOR TO COMMENCING CONSTRUCTION

HENDERSON LAND SERVICES LLC
200 North State Street, Ste. #103
Lake Oswego, Oregon 97034
telephone (503) 699-8999
facsimile (503) 699-8777

GRADING / EROSION CONTROL PLAN
SOUTHWEST
OTTER POINT RESTORATION PROJECT – CONSTRUCTION DOCUMENT PLAN SET

REGISTERED PROFESSIONAL ENGINEER 72848PE OREGON JULY 15, 2003 WILLIAM J. KEHRLI RENEWAL 6/30/11

DATE:	5/21/2010
DRAWN BY:	KMH
PROJ. MGR:	BAH
CHECKED BY:	WJK
PROJECT NUMBER	CREST 08-01
CASE FILE NUMBER	

SHEET NUMBER C5 OF 15

MeyerD, Plotted: May 18, 2010 – 4:26pm, P:\HEN.005 CREST\dwg\Eng\Set\HEN.005-GRD2.dwg

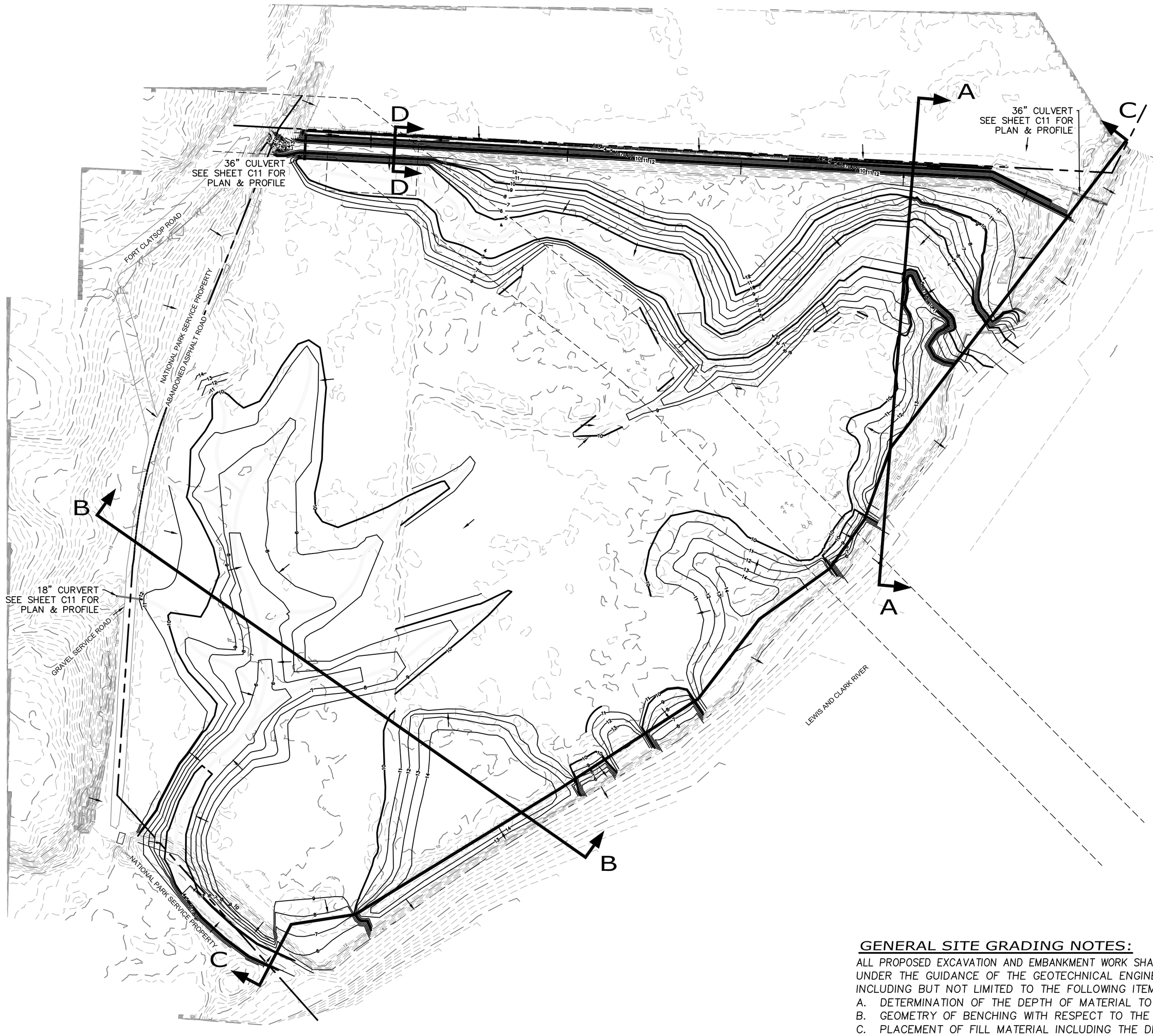

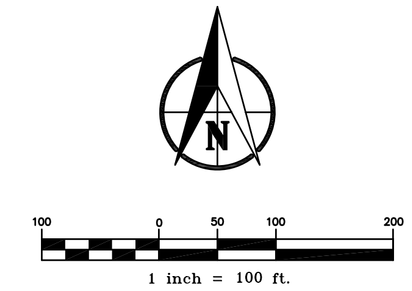

SEE SHEET C7 FOR PROFILE OF SECTION AA
SEE SHEET C8 FOR PROFILE OF SECTION BB
SEE SHEET C9 FOR PROFILE OF SECTION CC PART 1
SEE SHEET C10 FOR PROFILE OF SECTION CC PART 2
SEE SHEET C11 FOR PROFILE OF SECTION DD

GENERAL SITE GRADING NOTES:

ALL PROPOSED EXCAVATION AND EMBANKMENT WORK SHALL BE DONE UNDER THE GUIDANCE OF THE GEOTECHNICAL ENGINEER INCLUDING BUT NOT LIMITED TO THE FOLLOWING ITEMS:

A. DETERMINATION OF THE DEPTH OF MATERIAL TO BE REMOVED.
B. GEOMETRY OF BENCHING WITH RESPECT TO THE SITE SLOPE.
C. PLACEMENT OF FILL MATERIAL INCLUDING THE DEGREE OF COMPACTION REQUIRED.
D. REVIEW AND APPROVAL OF MEANS AND MECHANISM FOR DISCHARGING SUBSURFACE AND SURFACE WATER TO PROTECT THE SLOPE.
E. REVIEW OF ALL EXCAVATED MATERIAL TO ENSURE EXCAVATED MATERIAL DOES NOT CONTAIN LARGE ORGANIC DEBRIS. IF DEEMED NECESSARY BY GEOTECHNICAL ENGINEER, EXCAVATED MATERIAL SHALL BE SCREENED UNDER HIS/HER DIRECTION.

LEGEND

- EXISTING PROPERTY LINE/ROW
- EXISTING EASEMENT
- EXISTING WATER LEVEL
- XT — EXISTING UNDERGROUND ELECTRIC/TELEPHONE LINE
- EXISTING FENCE
- 185 — EXISTING 5 FT. CONTOUR INTERVAL
- 184 — EXISTING 1 FT. CONTOUR INTERVAL
- DIRECTION OF STORM WATER FLOW
- 185 — PROPOSED 5FT. CONTOUR INTERVAL
- 184 — PROPOSED 1FT. CONTOUR INTERVAL
- PROPOSED SEDIMENT FENCE

HENDERSON LAND SERVICES LLC
200 North State Street, Ste. #103
Lake Oswego, Oregon 97034
telephone (503) 699-8999
facsimile (503) 699-8777

GRADING CROSS SECTIONS KEY MAP

OTTER POINT RESTORATION PROJECT – CONSTRUCTION DOCUMENT PLAN SET

REGISTERED PROFESSIONAL ENGINEER 72848PE OREGON JULY 15, 2003 WILLIAM J. KEHRLI
RENEWAL 6/30/11

DATE:	5/21/2010
DRAWN BY:	KMH
PROJ. MGR:	BAH
CHECKED BY:	WJK
PROJECT NUMBER	CREST 08–01
CASE FILE NUMBER	

SHEET NUMBER C6 OF 15

MeyerD, Plotted: May 18, 2010 – 4:29pm, P:\HEN.005 CREST\dwg\Eng\Set\HEN.005–SEC1.dwg

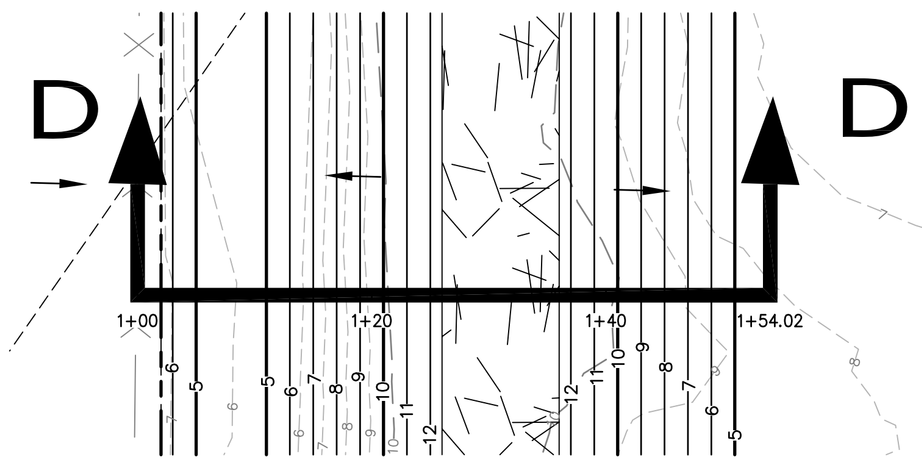

SECTION DD - PLAN

HORIZONTAL SCALE: 1" = 10'

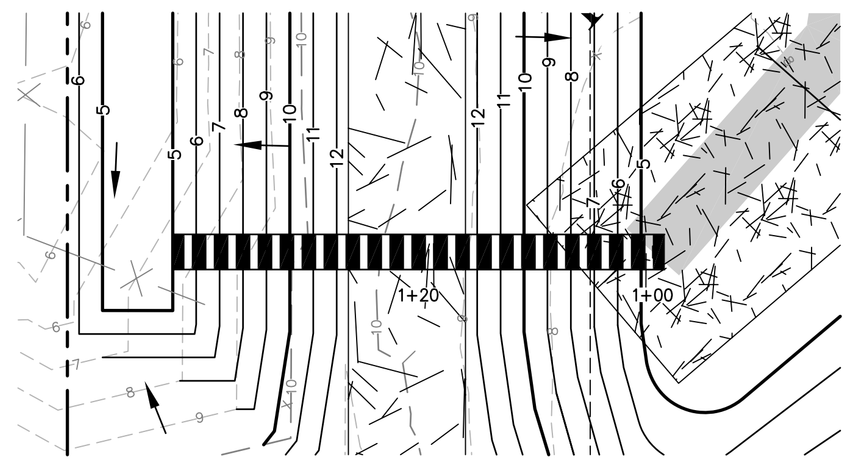

SWALE CULVERT - PLAN

HORIZONTAL SCALE: 1" = 10'

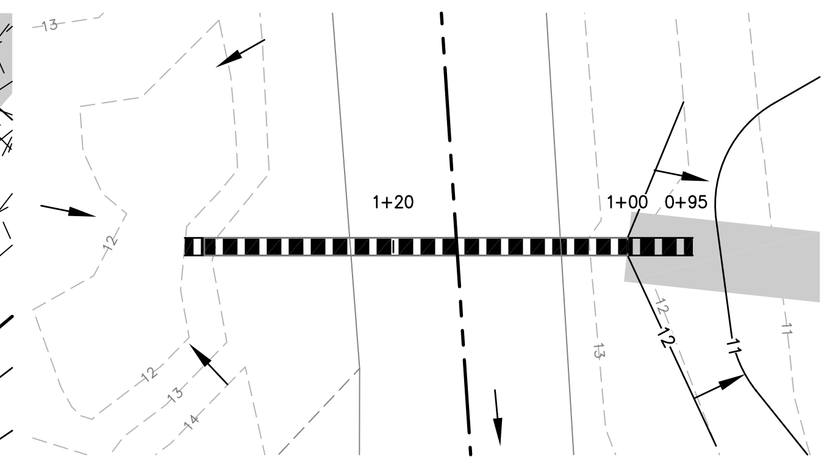

CULVERT 1 - PLAN

HORIZONTAL SCALE: 1" = 10'

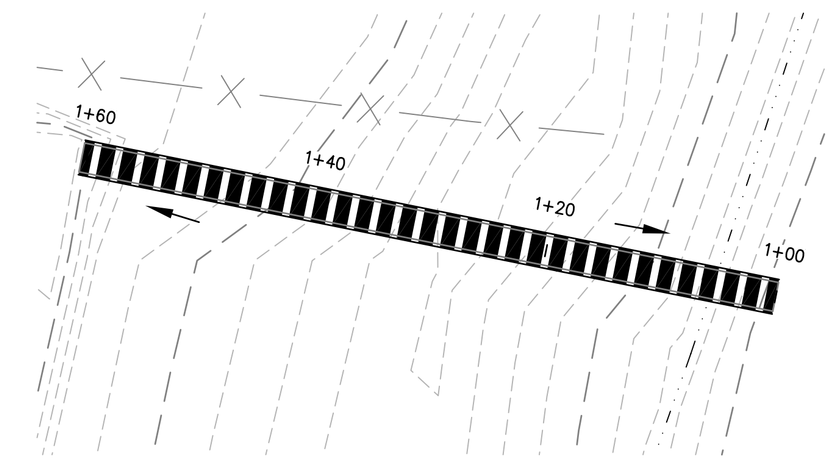

CULVERT 2 - PLAN (SEASON 2)

HORIZONTAL SCALE: 1" = 10'

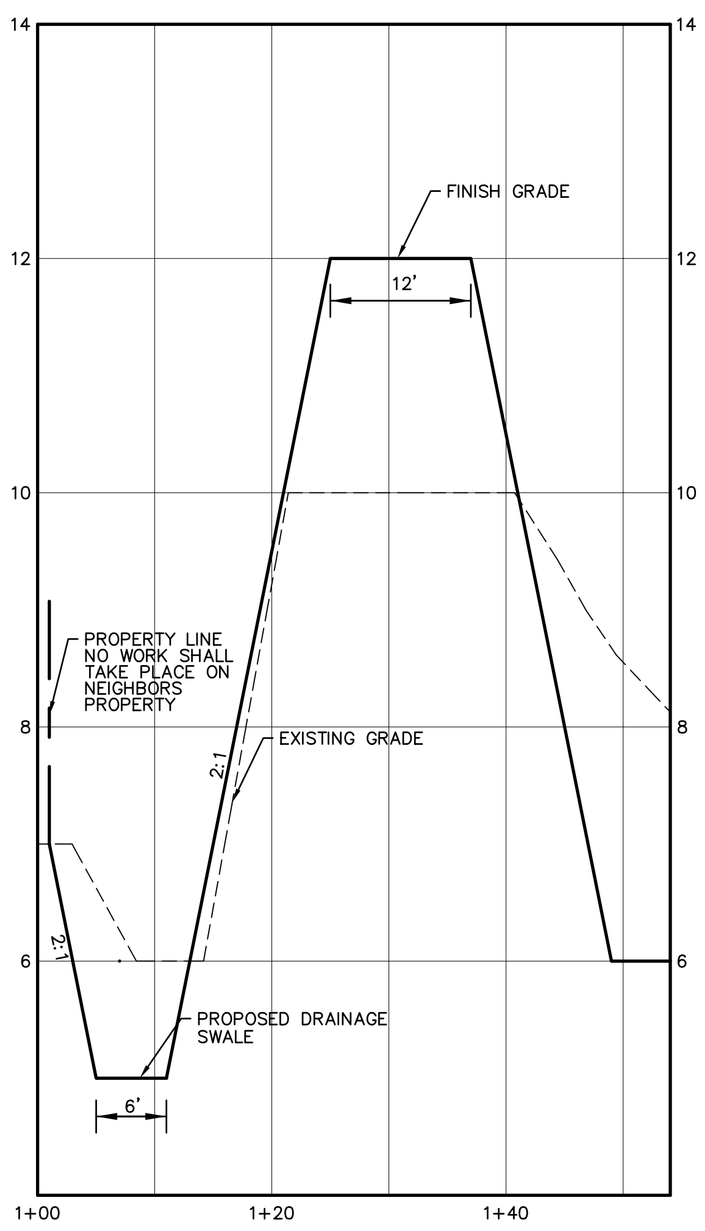

SECTION DD - PROFILE

HORIZONTAL SCALE: 1" = 10' VERTICAL SCALE: 1" = 1'

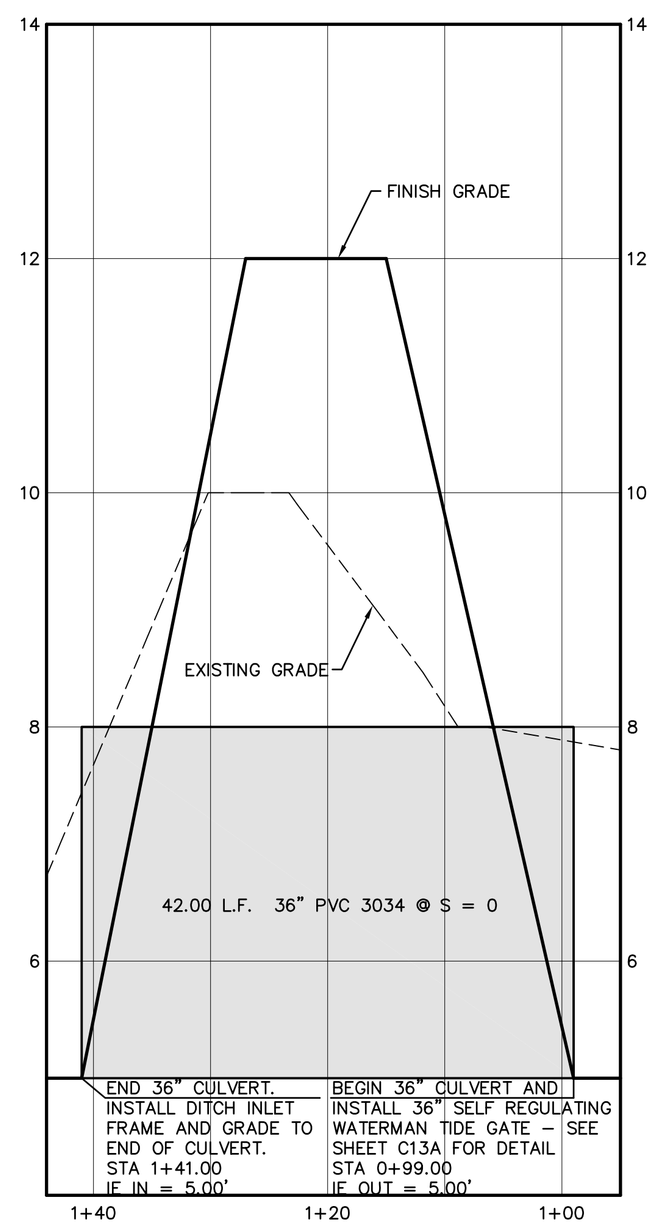

SWALE CULVERT - PROFILE

HORIZONTAL SCALE: 1" = 10' VERTICAL SCALE: 1" = 1'

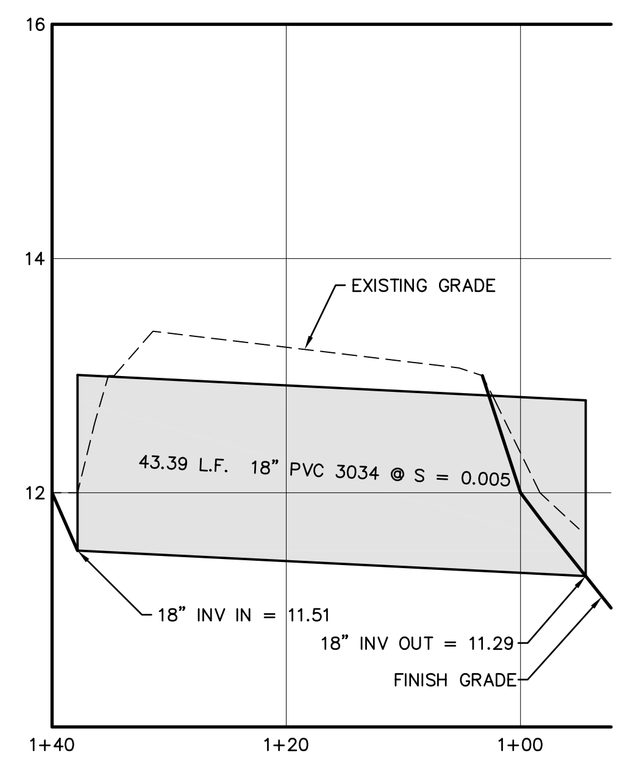

CULVERT 1 - PROFILE

HORIZONTAL SCALE: 1" = 10' VERTICAL SCALE: 1" = 1'

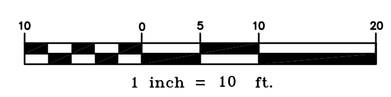

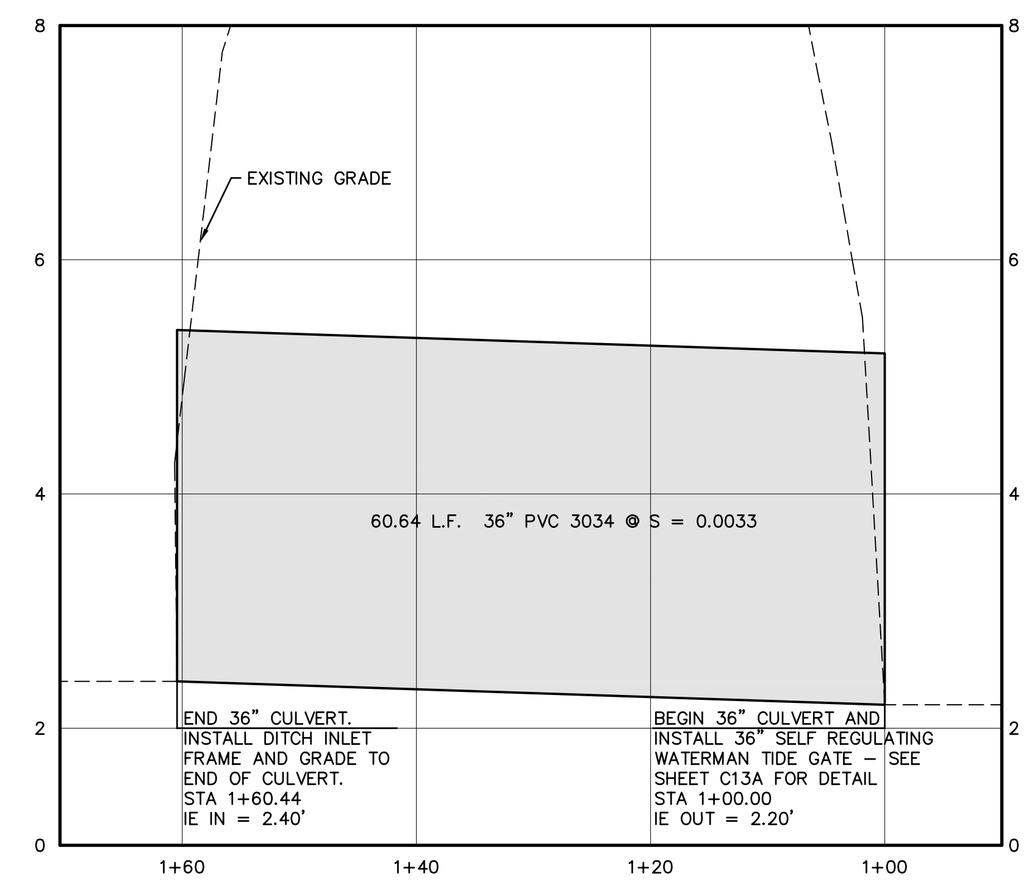

CULVERT 2 - PROFILE (SEASON 2)

HORIZONTAL SCALE: 1" = 10' VERTICAL SCALE: 1" = 1'

GENERAL SITE GRADING NOTES:

ALL PROPOSED EXCAVATION AND EMBANKMENT WORK SHALL BE DONE UNDER THE GUIDANCE OF THE GEOTECHNICAL ENGINEER INCLUDING BUT NOT LIMITED TO THE FOLLOWING ITEMS:

A. DETERMINATION OF THE DEPTH OF MATERIAL TO BE REMOVED.
B. GEOMETRY OF BENCHING WITH RESPECT TO THE SITE SLOPE.
C. PLACEMENT OF FILL MATERIAL INCLUDING THE DEGREE OF COMPACTION REQUIRED.
D. REVIEW AND APPROVAL OF MEANS AND MECHANISM FOR DISCHARGING SUBSURFACE AND SURFACE WATER TO PROTECT THE SLOPE.
E. REVIEW OF ALL EXCAVATED MATERIAL TO ENSURE EXCAVATED MATERIAL DOES NOT CONTAIN LARGE ORGANIC DEBRIS. IF DEEMED NECESSARY BY GEOTECHNICAL ENGINEER, EXCAVATED MATERIAL SHALL BE SCREENED UNDER HIS/HER DIRECTION.

LEGEND

- EXISTING PROPERTY LINE/ROW
- EXISTING EASEMENT
- EXISTING WATER LEVEL
- XT — EXISTING UNDERGROUND ELECTRIC/TELEPHONE LINE
- EXISTING FENCE
- 185 — EXISTING 5 FT. CONTOUR INTERVAL
- 184 — EXISTING 1 FT. CONTOUR INTERVAL
- DIRECTION OF STORM WATER FLOW
- 185 — PROPOSED 5FT. CONTOUR INTERVAL
- 184 — PROPOSED 1FT. CONTOUR INTERVAL
- PROPOSED SEDIMENT FENCE

HENDERSON LAND SERVICES LLC
200 North State Street, Ste. #103
Lake Oswego, Oregon 97034
telephone (503) 699-8999
facsimile (503) 699-8777

GRADING CROSS SECTION DD, SWALE CULVERT & CULVERT 1, 2 PLAN & PROFILE

OTTER POINT RESTORATION PROJECT – CONSTRUCTION DOCUMENT PLAN SET

REGISTERED PROFESSIONAL ENGINEER 72848PE OREGON JULY 15, 2003 WILLIAM J. KEHRLI RENEWAL 6/30/11

DATE:	5/21/2010
DRAWN BY:	KMH
PROJ. MGR:	BAH
CHECKED BY:	WJK
PROJECT NUMBER	CREST 08–01
CASE FILE NUMBER	

SHEET NUMBER C11 OF 15

MeyerD, Plotted: May 18, 2010 – 4:33pm, P:\HEN.005 CREST\dwg\Eng\Set\HEN.005–SEC6.dwg

N

100 0 50 100 200

1 inch = 100 ft.

PLANTING LEGEND

WETLAND AND RIPARIAN MARGIN PLANTING
ELEVATION 6' – 11'
8.10 AC (353,047 SF)

UPLAND AND UPLAND MARGIN PLANTING
ELEVATION 11' +
5.51 AC (240,099 SF)

SEE SHEET C12A FOR PLANTING PLAN NOTES AND DETAILS

LEGEND

- EXISTING PROPERTY LINE/ROW
- EXISTING EASEMENT
- EXISTING WATER LEVEL
- XT — EXISTING UNDERGROUND ELECTRIC/TELEPHONE LINE
- EXISTING FENCE
- 185 — EXISTING 5 FT. CONTOUR INTERVAL
- 184 — EXISTING 1 FT. CONTOUR INTERVAL
- DIRECTION OF STORM WATER FLOW
- 185 — PROPOSED 5FT. CONTOUR INTERVAL
- 184 — PROPOSED 1FT. CONTOUR INTERVAL
- PROPOSED SEDIMENT FENCE

HENDERSON LAND SERVICES LLC
200 North State Street, Ste. #103
Lake Oswego, Oregon 97034
telephone (503) 699-8999
facsimile (503) 699-8777

REVEGETATION / PLANTING PLAN

OTTER POINT RESTORATION PROJECT – CONSTRUCTION DOCUMENT PLAN SET

DATE: 5/21/2010
DRAWN BY: KMH
PROJ. MGR: BAH
CHECKED BY: WJK
PROJECT NUMBER
CREST 08–01
CASE FILE NUMBER

SHEET NUMBER
C12
OF 15

MeyerD, Plotted: May 18, 2010 – 4:27pm, P:\HEN.005 CREST\dwg\Eng\Set\HEN.005–PLNT.dwg

Wetland and Riparian Margin Planting (6-11 feet in elevation, NAV88)

Plant plugs of the following herbs and stakes of willow species in hydrologically appropriate portions of the Otter Point project site:

Species	Common Name	Area (Ac.)	No. / Acre	Est. Quantity
Carex lyngbyei	Lyngbye's sedge	8.10	1,040	8,424
Carex obnupta	slough sedge	8.10	640	5,184
Scirpus microcarpus	smallfruit bulrush	8.10	1,440	11,664
Salix lasiandra	Pacific willow	8.10	840	6,804
Minimum Planting Density Per Acre			3,960	
Minimum Total Quantity Plantings				32,076

In addition, plant plugs no fewer than 6 of the plant species in the following table planted in appropriate densities in hydrologically appropriate portions of the Otter Point project site:

Species	Common Name	Area (Ac.)	No. / Acre	Est. Quantity
Eleocharis palustris	common spikerush	8.10	840	6,804
Schoenoplectus acutus	hardstem bulrush	8.10	640	5,184
Schoenoplectus tabernaemontani	softstem bulrush	8.10	840	6,804
Juncus balticus var. *balticus*	Baltic rush	8.10	200	1,620
Deschampsia caespitosa	tufted hairgrass	8.10	840	6,804
Sagittaria latifolia	wapato	8.10	840	6,804
Argentina egedii ssp. *egedii*	Pacific silverweed	8.10	840	6,804
Minimum Planting Density Per Acre			5,040	
Minimum Total Quantity Plantings				40,824

Wetland and Riparian Margin Seeding (6-11 feet in elevation, NAV88)

Broadcast seed of the following 3 species in hydrologically appropriate portions of the Otter Point project site:

Species	Common Name	Area (Ac.)	Lbs. / Acre	Est. Quantity
Carex lyngbyei	Lyngbye's sedge	8.10	8	65
Carex obnupta	slough sedge	8.10	8	65
Eleocharis palustris	common spikerush	8.10	6	49
Minimum Seeding Density Per Acre			22	
Minimum Total Lbs. Seed				179

In addition, seed no fewer than 2 of the following plant species to achieve the recommended lbs. seeding per acre:

Species	Common Name	Area (Ac.)	Lbs. / Acre	Est. Quantity
Scirpus microcarpus	smallfruit bulrush	8.10	9	73
Deschampsia caespitosa	tufted hairgrass	8.10	9	73
Juncus balticus var. *balticus*	Baltic rush	8.10	1	8
Sagittaria latifolia	wapato	8.10	1	8
Minimum Seeding Density Per Acre			20	
Minimum Total Lbs. Seed				162

Upland and Upland Margin Plantings (>11 feet in elevation, NAV88)

Plant containerized, native stock, consisting of the following species, in appropriate portions of the Otter Point project site:

Species	Common Name	Area (Ac.)	No. / Acre	Est. Quantity
Picea sitchensis	Sitka spruce	5.51	120	661
Minimum Planting Density Per Acre			120	
Minimum Total Quantity Plantings				661

Species	Common Name	Area (Ac.)	No. / Acre	Est. Quantity
Gaultheria shallon	salal	5.51	136	749
Physocarpus capitatus	ninebark	5.51	136	749
Lonicera involucrata	twinberry	5.51	136	749
Rosa nutkana	Nootka rose	5.51	136	749
Rubus spectabilis	salmonberry	5.51	136	749
Spiraea douglasii	rose spiraea	5.51	136	749
Minimum Planting Density Per Acre			816	
Minimum Total Quantity Plantings				4,494

Upland and Upland Margin Seeding (>11 feet in elevation, NAV88)

Broadcast seed of the following 3 species in hydrologically appropriate portions of the Otter Point project site:

Species	Common Name	Area (Ac.)	Lbs. / Acre	Est. Quantity
Juncus tenuis	slender rush	5.51	6	33
Bromus sitchensis	Sitka brome	5.51	4	22
Deschampsia caespitosa	tufted hairgrass	5.51	6	33
Minimum Seeding Density Per Acre			16	
Minimum Total Lbs. Seed				88

In addition, seed no fewer than 4 of the following plant species to achieve the recommended lbs. seeding per acre:

Species	Common Name	Area (Ac.)	Lbs. / Acre	Est. Quantity
Physocarpus capitatus	ninebark	5.51	4	22
Lonicera involucrata	twinberry	5.51	4	22
Rosa nutkana	Nootka rose	5.51	4	22
Rubus spectabilis	salmonberry	5.51	4	22
Spiraea douglasii	rose spiraea	5.51	4	22
Minimum Seeding Density Per Acre			20	
Minimum Total Lbs. Seed				110

NOTE: If a seed base is needed for seeding dispersal in the upland and upland margin areas, appropriate quantities of the above species can be mixed into a native red fescue (*Festuca rubra* var. *rubra*) seed base.

Upland and Upland Margin Seeding (>11 feet in elevation, NAV88)

Broadcast seed of the following three (3) species in hydrologically appropriate portions of the Otter Point project site: **11'+ elevation on cross dike**. Use Sunmark Seeds Streambank Mix or equivalent.

Species	Common Name	Area (Ac.)	Lbs. / Acre	Est. Quantity
Elymus glaucus	Blue Wildrye	5.51	30	165
Festuca rubra	Native Red Fescue	5.51	15	83
Bromus carinatus	California Brome	5.51	5	28
Minimum Seeding Density Per Acre			50	
Minimum Total Lbs. Seed				276

NOTE: If a seed base is needed for seeding dispersal in the upland and upland margin areas, appropriate quantities of the above species can be mixed into a native red fescue (*Festuca rubra* var. *rubra*) seed base.

NOTE: The National Park Service will be providing plant materials to the contractor to ensure the source and quality of stock

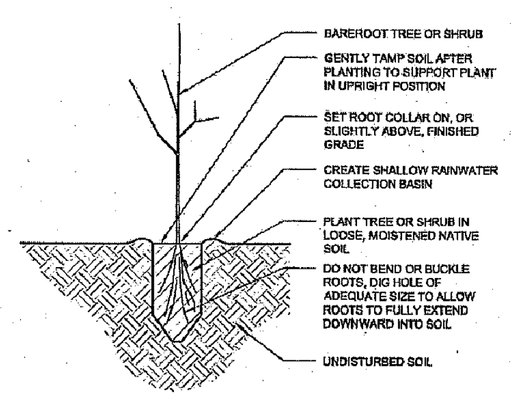

1 BAREROOT TREES AND SHRUBS
NTS

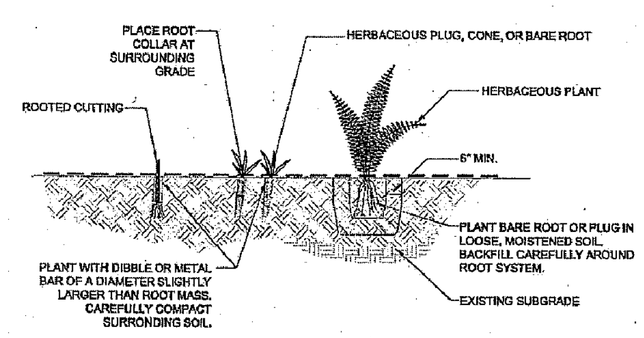

2 BAREROOT, PLUG, ROOTED CUTTING
NTS

HENDERSON LAND SERVICES LLC
200 North State Street, Ste. #103
Lake Oswego, Oregon 97034
telephone (503) 699-8999
facsimile (503) 699-8777

REVEGETATION / PLANTING PLAN NOTES AND DETAILS

OTTER POINT RESTORATION PROJECT – CONSTRUCTION DOCUMENT PLAN SET

DATE: 5/21/2010
DRAWN BY: KMH
PROJ. MGR: BAH
CHECKED BY: WJK
PROJECT NUMBER
CREST 08-01
CASE FILE NUMBER

SHEET NUMBER
C12A
OF 15

MeyerD, Plotted: May 18, 2010 – 4:41pm, P:\HEN.005 CREST\dwg\Eng\Set\HEN.005-PLNTA.dwg

NOTE:
DIMENSIONS IN MILLIMETERS WITH INCHES IN PARENTHESIS UNLESS OTHERWISE SPECIFIED.

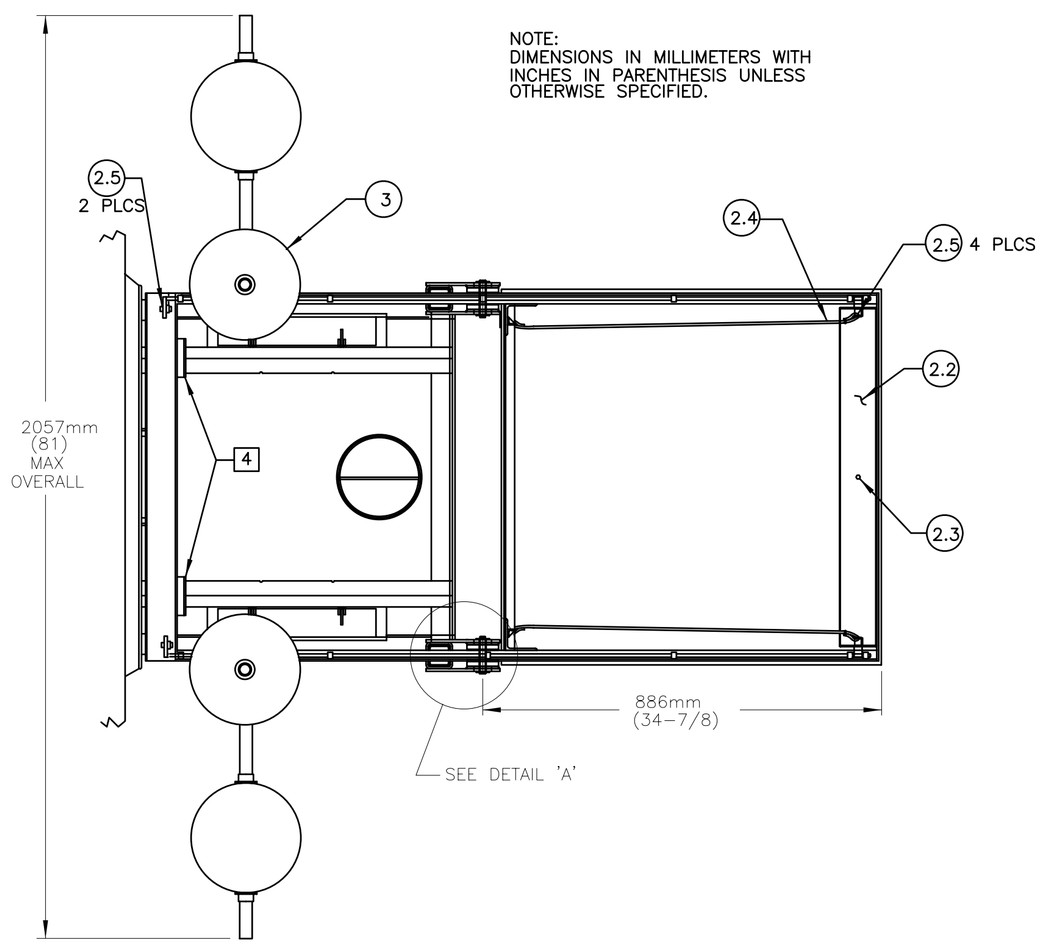

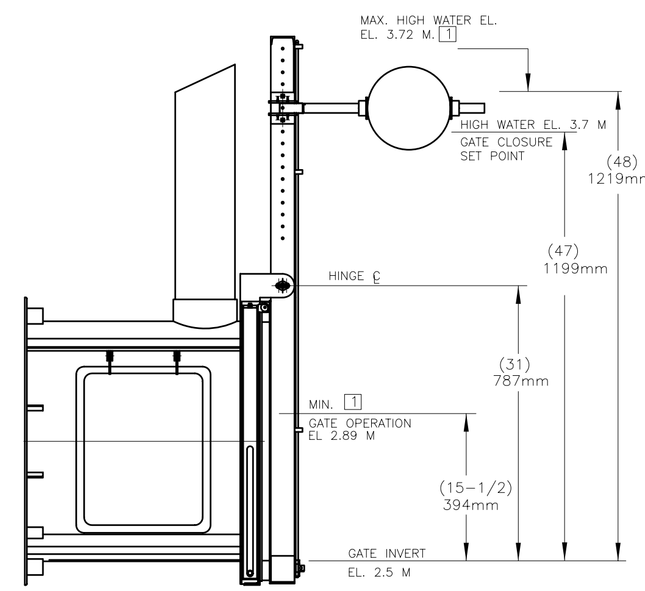

(GATE SHOWN IN CLOSED POSITION)

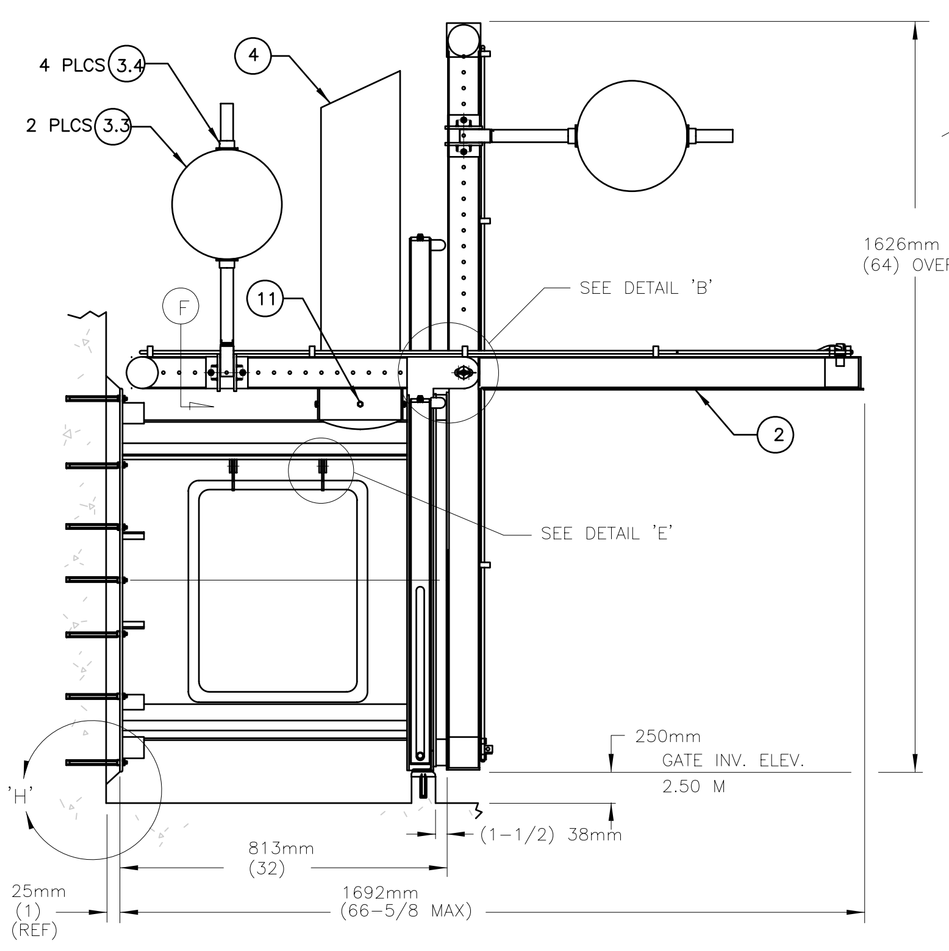

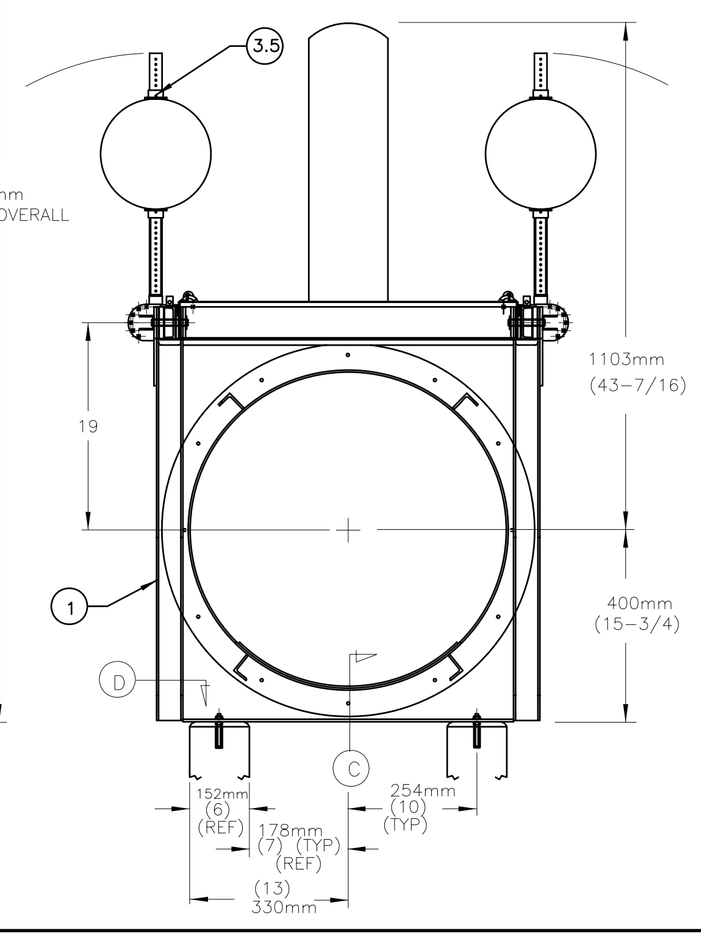

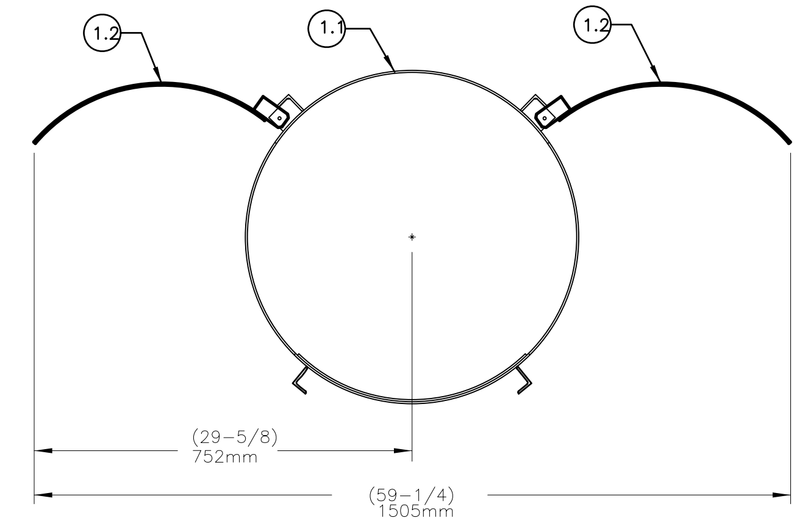

MATERIAL KEY	FINISH KEY	PAINT KEY
	2. MILL 3. MACHINE	

ITEM	ITEM DESCRIPTION	MATERIAL KEY	FINISH KEY	PART NO. OR SIZE (FOR WATERMAN USE ONLY)	QTY/ GATE	TOTAL QTY
1	FRAME ASSEMBLY	–	–			
1.1	FRAME WELDMENT	17	2,3			
1.2	LATERAL DOOR	17	6K			
1.3	BUSHING	35	2,3			
1.4	SHOULDER SCREW	9A	2,3			
1.5	WASHER	15A	2			
1.6	WASHER	21	2			
1.7	HEX NUT,WASHER,LOCKWASHER	27,15A	2			
1.8	VERITCAL FLOAT	17	6L			
1.9	PIPE PLUG	9A	2			
1.10						
1.11						
1.12	FLOAT PIN	9A	2,3			
1.13	BUSHING	35	2,3			
1.14	COLLAR	9B	2,3			
1.15	WASHER	21	2			
1.16	COTTER PIN	9A	2			
1.17	FRONT GASKET	44	2,3			
1.18	WASHER	21	2,3			
1.19	HEX HEAD BOLT	15A	2			
1.20	WASHER	15A	2			
1.21						
1.22	HEX NUT, SELF-LOCKING	15A	2			
1.23	ISOLATION SLEEVE	35	2			
1.24	WASHER, LARGE O.D.	15A	2			
1.25						
1.26						
2	DOOR ASSEMBLY					
2.1	COVER	17	6K,2			
2.2	DOOR FLOAT	17	6L			
2.3	PIPE PLUG	9A	2			
2.4	ATTACHING CABLE	9A	2			
2.5	HEX HD SCREW, WASHER, LOCKWASHER & NUT	15A,27	2			
2.6	FLOAT RELEASE ROD	17	2,3			
2.7	SPRING PIN	9A	2			
2.8	BUSHING	46	2,3			
3	BACK FLOAT ASSEMBLY					
3.1	BACK FLOAT BRACKET	17	2,3			
3.2	FLOAT ARM	17	2,3			
3.3	FLOAT	43,35	2,3			
3.4	FLOAT STOP	17	2,3			
3.5	COTTER PIN	9B	2			
3.6	HEX HD BOLT, WASHER, LOCKWASHER, & HEX NUT	15A,27	2			
3.7	HEX HD BOLT, WASHER, LOCKWASHER, & HEX NUT	15A,27	2			
3.8	WASHER	21	2			
4	VACUUM BREAK VENT	19	2,3			
5	DOOR PIVOT PIN	9A	2,3			
6	CENTERING WASHERS	13	2,3			
7	SPACER WASHER	21	2,3			
8	COLLAR	9A	2,3			
9	WASHER	21	2			
10	COTTER PIN	9B	2			
11	HEX HEAD BOLT, WASHER, LOCKWASHER & NUT	15A,27	2			
20	ALL THREADED STUD	9B	2,3			
21	WASHER	15B	2			
22	WASHER	21	2,3			
23	ISOLATION SLEEVE	35	2			
24	HEX NUT	15B	2			
25	CONCRETE ANCHOR	STN STL	2			
26						
27						
28						
29						
30						
31						

This drawing is property of WATERMAN INDUSTRIES. Not to be used or reproduced without WATERMAN INDUSTRIES permission in writing. Items on this drawing are covered by patents. This equipment is of WATERMAN design – Manufactured and sold under WATERMAN's license.

REF.

(1) GATE REQUIRED AT ☐

REV. NO.	DATE	BY
REV. NO.	DATE	BY
REV. NO.	DATE	BY
REV. NO.	DATE	BY
REV. NO.	DATE	BY
REV. NO.	DATE	BY

610mm (24") DIA. WATERMAN SELF-REGULATING TIDEGATE

FOR

JOB NO. | P.M.
QUOTE NO. | ITEM #
DRAWN BY | CHECKED BY
SCALE: NONE | DATE
DRAWING NO. | SHEET

WATERMAN INDUSTRIES
EXETER, CALIFORNIA 93221

HENDERSON LAND SERVICES LLC
200 North Stone Street, Ste. #103
Lake Oswego, Oregon 97034
telephone (503) 699-8999
facsimile (503) 699-8777

CONSTRUCTION DETAILS
WATERMAN SELF REGULATING TIDE GATE
OTTER POINT RESTORATION PROJECT – CONSTRUCTION DOCUMENT PLAN SET

DATE: 5/21/2010
DRAWN BY: KMH
PROJ. MGR: BAH
CHECKED BY: WJK
PROJECT NUMBER
CREST 08-01
CASE FILE NUMBER

SHEET NUMBER
C13A
OF 15

MeyerD, Plotted: May 18, 2010 – 4:24pm, P:\HEN.005 CREST\dwg\Eng\Set\HEN.005-DET2.dwg

TYPE 1 LWD - IN CHANNEL LOG

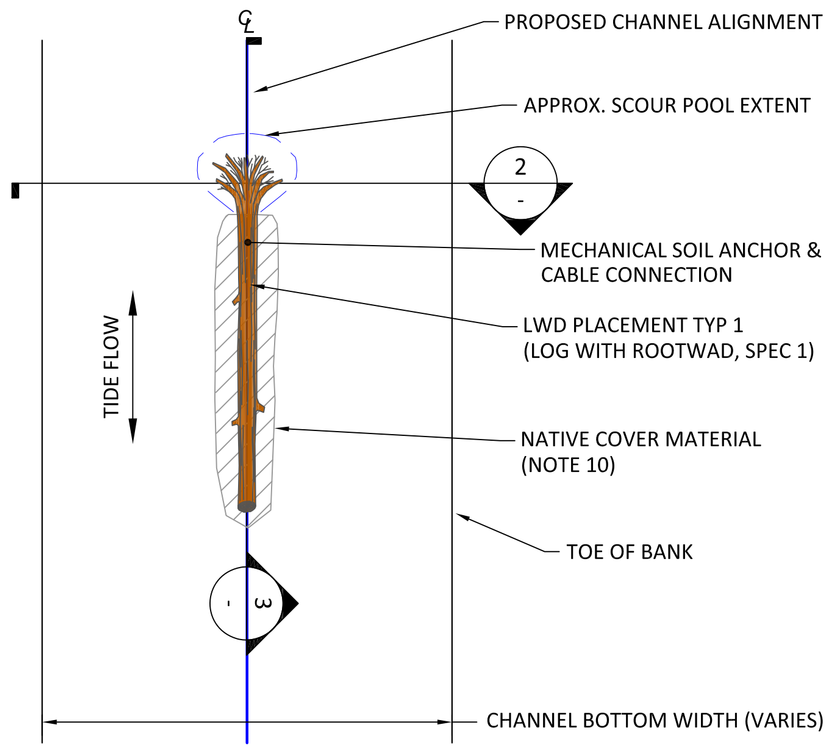

1 - PLAN - TYPE 1 LWD
SCALE:1" = 10'

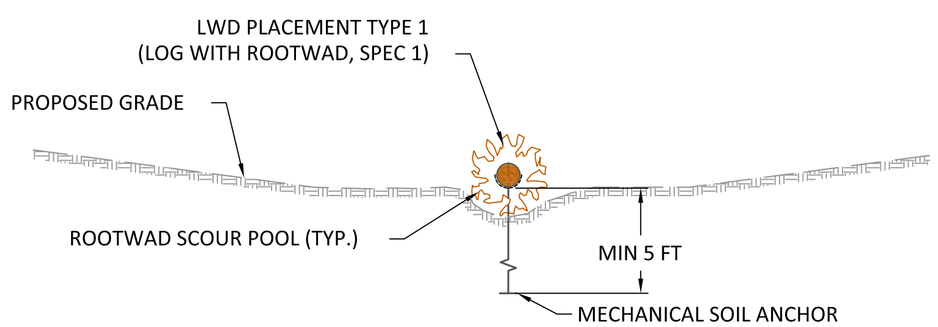

2 - SECTION
SCALE:1" = 10'

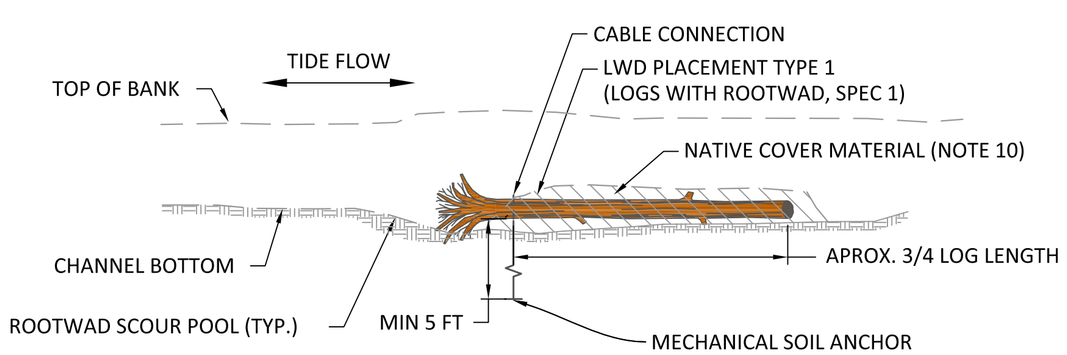

3 - PROFILE
SCALE: 1" = 10'

TYPE 2 LWD - BANK LOG

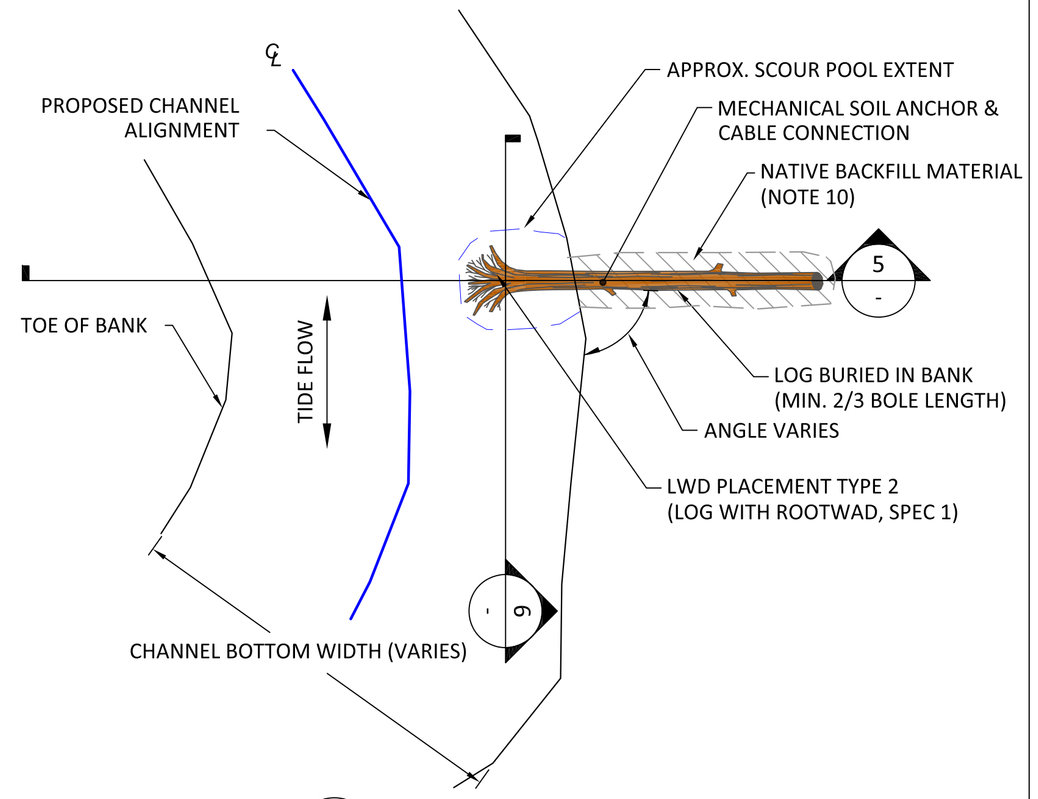

4 - PLAN - TYPE 2 LWD
SCALE:1" = 10'

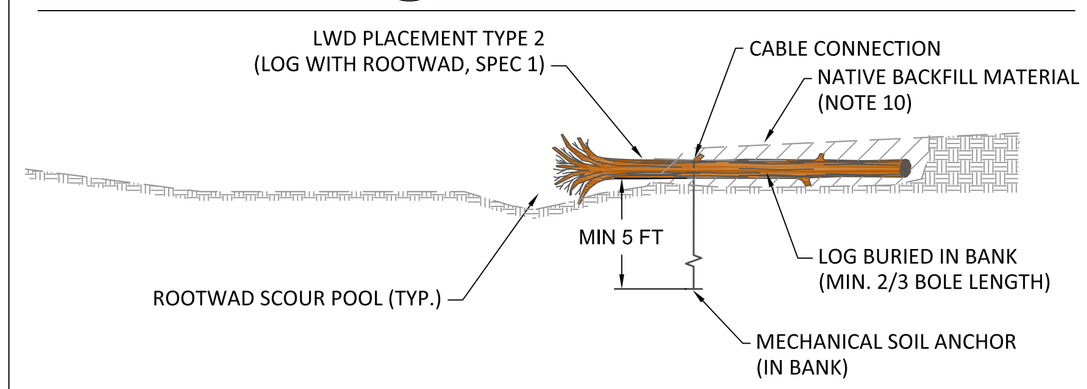

5 - SECTION
SCALE: 1" = 10'

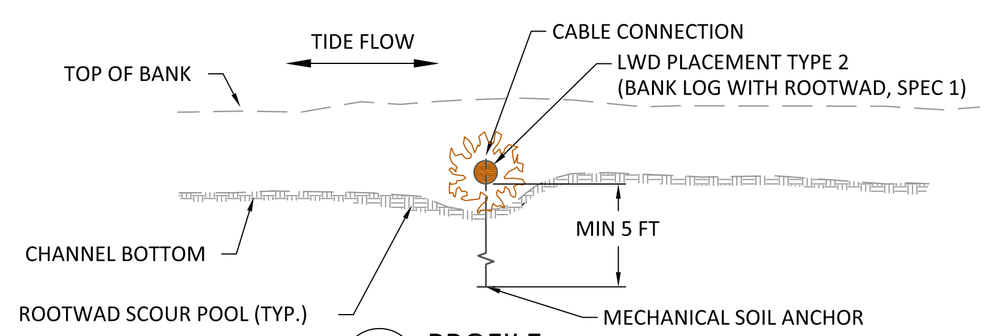

6 - PROFILE
SCALE: 1" = 10'

CABLE AND ANCHOR DETAILS

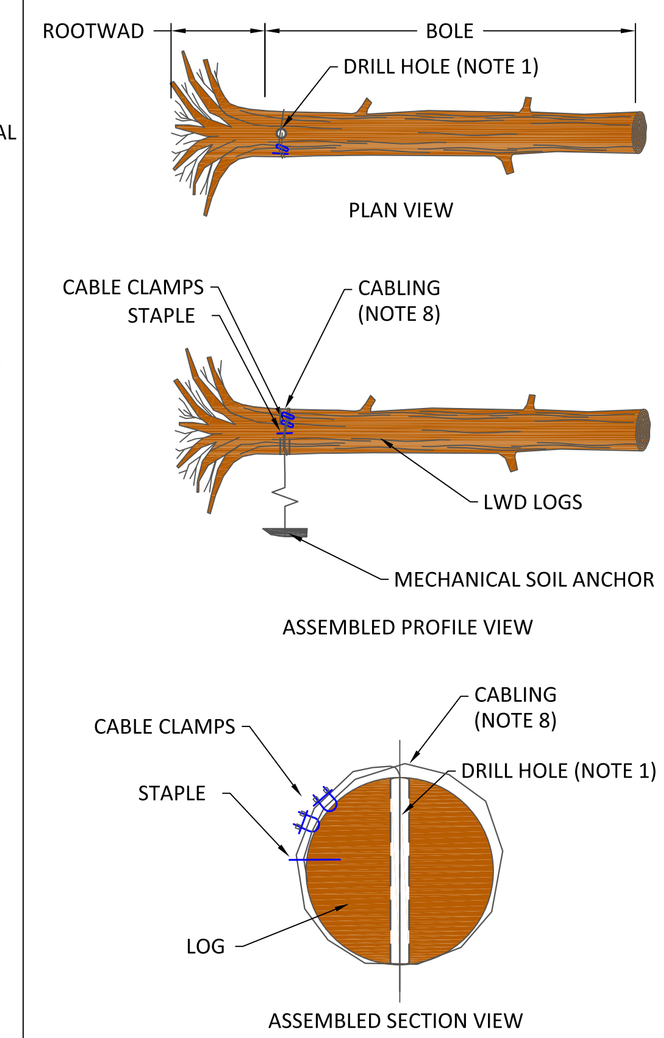

7 - CABLE DETAILS TYP.
SCALE:NOT TO SCALE

CONSTRUCTION SEQUENCE OF EVENTS FOR LWD PLACEMENT

1. LOGS MAY BE PREDRILLED. DRILL LOGS IN CENTER OF BOLE. HOLE DIAMETER NOT TO EXCEED 1.50 TIMES THE CABLE DIAMETER.
2. PLACE TYPE 1 LOGS PARALLEL WITH CHANNEL AS SHOWN IN DETAIL. ROOTWAD SHALL FACE AS SHOWN ON SHEET C-1.
2. PLACE TYPE 2 LOGS AT ANGLE TO CHANNEL AS SHOWN ON SHEET C-1.
3. EXCAVATE CHANNEL BOTTOM AS NECESSARY FOR ROOTWAD SO THAT BOLE HAS FULL CONTACT WITH CHANNEL BOTTOM.
4. EXCAVATE CHANNEL BANK AS NECESSARY FOR TYPE 2 LOG TO BE PLACED LEVEL WITH THE ROOTWAD ON THE CHANNEL BOTTOM. LOG IS BURIED INTO BANK AS SHOWN ON PLANS.
5. PROVIDE SUFFICIENT LENGTH OF CABLE TO INSTALL MECHANICAL SOIL ANCHOR, CABLE DRILLED LOGS, AND WRAP AND SECURE LOG AS SHOWN IN DETAIL.
6. DRIVE MECHANICAL SOIL ANCHOR TO A DEPTH NO LESS THAN THAT SHOWN ON PLANS AND AS INSTRUCTED BY MANUFACTURER INSTALLATION PROCEDURES.
7. ANCHOR STABILITY SHALL BE **PROOFED TO A LOAD NO LESS THAN 3,500 LB** CONSISTENT WITH METHODS RECOMMENDED BY THE MANUFACTURER.
8. ANCHOR LOAD LOCKED DEPTH SHALL BE NO LESS THAN THAT SHOWN ON PLANS. FINAL INSTALLATION TO BE APPROVED BY CONTRACTING OFFICER.
9. ONCE ANCHOR STABILITY IS SATISFACTORILY PROOFED, TIGHTLY WRAP CABLE ONE AND ONE-QUARTER TIMES THE LOG CIRCUMFERENCE AND SECURE TWO STRANDS OF CABLE WITH CABLE CLAMPS AND STAPLE END OF CABLE TO LOG.
10. BACKFILL OR COVER LWD AS SHOWN WITH NATIVE SOIL FROM CHANNEL EXCAVATION.

METAL PRODUCT SPECIFICATIONS

DESCRIPTION	SPEC. DIMENSION	MATERIAL
STEEL CABLE	5/16" DIA.	6x19 GALV. EIPS IWRC
STEEL CABLE CLAMP	5/16" CAP.	GALV. DROP FORGED STEEL
STEEL STAPLE	4" LONG	GALV. DROP FORGED STEEL
MECH. SOIL ANCHOR	MODEL MR-3	SEE FORESIGHT MFG. SPEC

METAL PRODUCT SPECIFICATIONS NOTES:
A. USE SPECIFIED PRODUCT OR EQUAL, AS APPROVED BY ENGINEER.

LWD LOG SPECIFICATIONS

	DIA. (IN.)	MIN. LENGTH (FT)	ROOTWAD (3x DBH)	TREE SPECIES
LOG SPEC. 1	15-18	30	Yes	DOUGLAS FIR, SITKA SPRUCE, HEMLOCK

LOG SPECIFICATIONS NOTES:
A. LOG DIAMETER TAPER SHALL NOT EXCEED ONE INCH PER 10 FEET LENGTH, UP TO 3" MAX.
B. LOGS WITH ROOTWADS MEASURED DEPTH BREST HEIGHT (DBH).

ESTIMATED QUANTITIES
(CONTRACTOR RESPONSIBLE FOR VERIFYING QUANTITIES)

DESCRIPTION	UNIT	QTY.
LARGE WOODY DEBRIS (LWD) LOG, SPEC 1	EA	46
STEEL CABLE	LF	650
STEEL CABLE CLAMP	EA	92
STEEL STAPLE	EA	46
MECHANICAL SOIL ANCHOR ASSEMBLIES	EA	46

ESTIMATED QUANTITIES NOTES:
A. STEEL CABLE LENGTH ASSUMES THE FOLLOWING: 7 FT FOR ANCHOR TO GROUND SURFACE, 7 FT FOR ATTACHMENT TO LWD.

HENDERSON LAND SERVICES LLC
200 North State Street, Ste. #103
Lake Oswego, Oregon 97034
telephone (503) 699-8999
facsimile (503) 699-8777

LARGE WOODY DEBRIS DETAILS
OTTER POINT RESTORATION PROJECT – CONSTRUCTION DOCUMENT PLAN SET

REGISTERED PROFESSIONAL ENGINEER 84170PE
OREGON MAY 11, 2010 TRACY A. DRURY
EXPIRATION DATE: 12/31/11

DATE: 3/01/2010
DRAWN BY: JG
PROJ. MGR: BAH
CHECKED BY: TD
PROJECT NUMBER CREST 08-01
CASE FILE NUMBER

SHEET NUMBER C15 OF 15

epipkin, Plotted: May 19, 2010 – 1:35pm, B:\Projects\0513_Henderson\080513-01_nationalhistoricpark\CAD\02-26-2010_To_Be_Submitted\C-2 LWD_Details_08.dwg

Appendix B.
Scoping Meeting Invitation Letters

United States Department of the Interior
NATIONAL PARK SERVICE
Lewis and Clark National Historical Park
92343 Fort Clatsop Road
Astoria, Oregon 97103

Date June 10, 2010

[Contact]
[name of agency]
[address]
[City, State, Zip]

Re: Otter Point Salmon Recovery Project Scoping Meeting. Meeting will commence at 2 pm and a site tour will be provided at 3 pm.

Dear [man /woman/person] [last name]:

On June 24, the National Park Service will hold an agency scoping meeting at the Netul Room in the Fort Clatsop Visitor Center. The purpose of this meeting is to kick-off public planning for the proposed Otter Point Salmon Restoration project. The Otter Point project proposes to return 34 acres of National Park Service lands by realigning the diking system so that these lands are outside the dike.

The purpose of this project is to satisfy the intent of the Fort Clatsop National Memorial Expansion Act of 2002 (P.L. 107-221) and to help satisfy federal legal responsibilities under the 2008 Biological Opinion for the Federal Columbia River Power System (2008 Bi-Op).

Congressmen Wu and Baird and Senators Wyden, Cantwell, and Murray sponsored the 2002 law that expanded the park's boundary. This expansion was based on recommendations contained in the park's 1995 General Management Plan/Environmental Impact Statement that stated modifying dikes, where feasible to recreate the salmon habitat and tidal sloughs that First Americans knew at the time of the arrival of the Lewis and Clark Expedition.

As the lead federal agency for the project, the National Park Service would like to continue consultation with the [name]. We would very much appreciate the opportunity to meet with you and other appropriate representatives of the [name] in

order to commence consultation on the development of the Otter Point Restoration Project. The goal of the consultation is to identify any concerns early in the environmental review process and reach mutually agreeable decisions while taking into account the interests of Tribal, State and Federal governments.

We cordially invite you or your representative(s) to attend a tribal and agency scoping meeting on Thursday, June 24, 2010 at 2:00 p.m. at the Lewis and Clark National Historical Park Visitor Center's Netul Room. We would also like to invite you to participate in the review of Otter Point Environmental Assessment (EA).

Thank you for taking the time to consider these requests. If you have any questions, please contact me (503-861-4401) or (?).

Sincerely,

David Szymanski
Superintendent

cc: [Names/agencies/organizations]

United States Department of the Interior
NATIONAL PARK SERVICE
Lewis and Clark National Historical Park
92343 Fort Clatsop Road
Astoria, Oregon 97103

Date June 10, 2010

The Honorable [Chair name]
[name of Tribe/Nation]
[address]
[City, State, Zip]

Re: Otter Point Salmon Recovery Project Scoping Meeting. Meeting will commence at 2 pm and a site tour will be provided at 3 pm.

Dear Chair [man /woman/person] [last name]:

On June 24, the National Park Service will hold an agency scoping meeting at the Netul Room in the Fort Clatsop Visitor Center. The purpose of this meeting is to kick-off public planning for the proposed Otter Point Salmon Restoration project. The Otter Point project proposes to return 34 acres of National Park Service lands by realigning the diking system so that these lands are outside the dike.

The purpose of this project is to satisfy the intent of the Fort Clatsop National Memorial Expansion Act of 2002 (P.L. 107-221) and to help satisfy federal legal responsibilities under the 2008 Biological Opinion for the Federal Columbia River Power System (2008 Bi-Op).

Congressmen Wu and Baird and Senators Wyden, Cantwell, and Murray sponsored the 2002 law that expanded the park's boundary. This expansion was based on recommendations contained in the park's 1995 General Management Plan/Environmental Impact Statement that stated modifying dikes, where feasible to recreate the salmon habitat and tidal sloughs that First Americans knew before drainage and diking of the area.

As the lead federal agency for the project, the National Park Service would like to continue government-to-government consultation with the [Tribe/Nation name]. Among other issues, we would like consultation to address cultural and historic resource issues, pursuant to Section 106 of the National Historic Preservation Act [36 CFR 800.2(c)(4)]. We seek your guidance and advice.

We would very much appreciate the opportunity to meet with you and other appropriate representatives of the [Tribe/Nation] in order to commence government-to-government

consultation on the development of the Otter Point Restoration Project. The goal of the consultation is to identify any concerns early in the environmental review process and reach mutually agreeable decisions while taking into account the interests of Tribal, State and Federal governments.

We cordially invite you or your representative(s) to attend a tribal and agency scoping meeting on Thursday, June 24, 2010 at 2:00 p.m. at the Lewis and Clark National Historical Park Visitor Center's Netul Room. We would also like to invite you to participate in the review of Otter Point Environmental Assessment (EA).

Thank you for taking the time to consider these requests. If you have any questions, please contact me (503-861-4401) or (?).

Sincerely,

David Szymanski
Superintendent

cc: [Names/agencies/organizations]