Isle Royale National Park—*M/V Ranger III* Ballast Water Treatment System

Ballast Water Treatment System Evaluation for Small Vessels

Prepared for
Isle Royale National Park
Houghton, MI

File No. 10141.01
11 March 2011, Rev. -

Note: Proprietary information contained Sections 6.5, 7, and Appendices A and B of this document has been redacted

Isle Royale National Park—M/V Ranger III Ballast Water Treatment System

Ballast Water Treatment System Evaluation for Small Vessels

Prepared for
Isle Royale National Park
Houghton, MI

File No. 10141.01
11 March 2011, Rev. -

Signed Original on File at Glosten

Darren G. Monzingo, PE
Project Engineer

Kevin J. Reynolds, PE
Quality Assurance

Robert J. Van Slyke, PE
Principal-in-Charge

THE GLOSTEN ASSOCIATES
Consulting Engineers Serving the Marine Community

1201 Western Avenue, Suite 200, Seattle, Washington 98101-2921 | **TEL** 206.624.7850 | **FAX** 206.682.9117 | **www.**glosten.com

EXECUTIVE SUMMARY ..... **VI**

SECTION 1 INTRODUCTION **1**

SECTION 2 BALLAST WATER TREATMENT REGULATIONS **2**

2.1 INTERNATIONAL 2
2.2 NATIONAL 2
2.3 LOCAL 3

SECTION 3 PLATFORM VESSEL **5**

3.1 GENERAL 5
3.2 SERVICE PROFILE 5
3.3 BALLASTING CYCLES 6
3.4 ELECTRICAL LOADS AND GENERATING CAPACITY 6

SECTION 4 EVALUATION PROCEDURE **7**

4.1 EVALUATION CATEGORIES 7
4.1.1 Efficacy *7*
4.1.2 Residual Toxicity *7*
4.1.3 Equipment Size and Weight *7*
4.1.4 Electrical Load *7*
4.1.5 Lifecycle Costs *8*
4.1.6 Safety *8*
4.2 INDIRECT CONSIDERATIONS (CORROSION) 8
4.3 GLOBAL ASSUMPTIONS 8

SECTION 5 CANDIDATE TECHNOLOGIES **10**

5.1 SELECTION PROCESS 10
5.1.1 Alfa Laval PureBallast *10*
5.1.2 Hyde Guardian Ballast Water Treatment System *10*
5.1.3 Unitor Ballast Water Treatment System *10*
5.1.4 Hitachi ClearBallast Purification System *10*
5.1.5 Siemens SiCURE Ballast Water Management System *11*
5.1.6 Sodium Hydroxide Dosing (under development by USGS) *11*
5.1.7 Sodium Hypochlorite Dosing (under development by NPS and Michigan Technological University) 11
5.2 MARKET LIMITATIONS 11

SECTION 6 SYSTEM DISCUSSION **12**

6.1 ALFA LAVAL PUREBALLAST 12
6.1.1 Description *12*
6.1.2 Efficacy *13*
6.1.3 Residual Toxicity *13*
6.1.4 Equipment Size and Weight *13*
6.1.5 Electrical Load *13*
6.1.6 Capital Costs *14*
6.1.7 Operating and Maintenance Costs *14*
6.1.8 Safety *14*
6.2 HYDE GUARDIAN BALLAST WATER TREATMENT SYSTEM 15
6.2.1 Description *15*
6.2.2 Efficacy *15*
6.2.3 Residual Toxicity *16*
6.2.4 Equipment Size and Weight *16*

6.2.5 Electrical Load 16
6.2.6 Capital Costs 17
6.2.7 Operating and Maintenance Costs 17
6.2.8 Safety 17
6.3 UNITOR BALLAST WATER TREATMENT SYSTEM 18
6.3.1 Description 18
6.3.2 Efficacy 18
6.3.3 Residual Toxicity 19
6.3.4 Equipment Size and Weight 19
6.3.5 Electrical Load 19
6.3.6 Capital Costs 19
6.3.7 Operating and Maintenance Costs 20
6.3.8 Safety 20
6.4 HITACHI CLEARBALLAST PURIFICATION SYSTEM 21
6.4.1 Description 21
6.4.2 Efficacy 21
6.4.3 Residual Toxicity 22
6.4.4 Equipment Size and Weight 22
6.4.5 Electrical Load 22
6.4.6 Capital Costs 22
6.4.7 Operating and Maintenance Costs 22
6.4.8 Safety 22
6.5 SIEMENS SICURE BALLAST WATER MANAGEMENT SYSTEM 23
6.5.1 Description 23
6.5.2 Efficacy 24
6.5.3 Residual Toxicity 24
6.5.4 Equipment Size and Weight 24
6.5.5 Electrical Load 25
6.5.6 Capital Costs 25
6.5.7 Operating and Maintenance Costs 25
6.5.8 Safety 25
6.6 SODIUM HYDROXIDE DOSING 26
6.6.1 Description 26
6.6.2 Efficacy 27
6.6.3 Residual Toxicity 27
6.6.4 Equipment Size and Weight 28
6.6.5 Electrical Load 28
6.6.6 Capital Costs 29
6.6.7 Operating and Maintenance Costs 29
6.6.8 Safety 29
6.7 SODIUM HYPOCHLORITE DOSING 30
6.7.1 Description 30
6.7.2 Efficacy 31
6.7.3 Residual Toxicity 31
6.7.4 Equipment Size and Weight 31
6.7.5 Electrical Load 31
6.7.6 Capital Costs 32
6.7.7 Operating and Maintenance Costs 32
6.7.8 Safety 32

SECTION 7 RANKING 33

7.1.1 Efficacy 33
7.1.2 Residual Toxicity 34

7.1.3 Equipment Size and Weight *35*
7.1.4 Electrical Load *35*
7.1.5 Lifecycle Costs *35*
7.1.6 Safety *37*

SECTION 8 CONCLUSIONS **38**

APPENDIX A Capital Cost Estimates

APPENDIX B Operating and Maintenance Cost Estimate

APPENDIX C Assumed Generator Fuel Consumption Characteristics

References

1. International Maritime Organization (IMO). International Convention for the Control and Management of Ships' Ballast Water and Sediments, 2004.
2. Ballast Water Treatment Advisory. American Bureau of Shipping, 2010.
3. Ballast Water Treatment Technology: Current Status. Lloyd's Register, 2010.
4. Alfa-Laval Corporation. Alfa-Laval PureBallast 2.0 product literature, 2008.
5. System Manual – PureBallast 2.0
6. Bogia, Larry. 13 February, 2011. E-mail.
7. Hyde Guardian product literature.
8. Hyde Guardian Operation, Maintenance, & Installation Manual.
9. Final Report of the Land-Based Testing of the Hyde Guardian System. Royal Netherlands Institute for Sea Research, 2008.
10. Shipboard Trials of Hyde 'Guardian' System in Caribbean Sea and Western Pacific Ocean. University of Maryland Center for Environmental Science, 2009.
11. Environmental Acceptability Evaluation of the Hyde Guardian Ballast Water Treatment System as Part of the Type Approval Process. NIOZ, 2009.
12. Unitor Ballast Water Treatment System product literature.
13. GESAMP Review of Proposals for Approval of Ballast Water Management Systems that Make Use of Active Substances - Resource Ballast Technologies System.
14. Hitachi ClearBallast product literature.
15. Navigating IMO Regulations with SiCURE Ballast Water Management Systems. Siemens Water Technologies, 2010.
16. Zolotarksy, Vadim. 14 January, 2011. E-mail.
17. Report of the Land-Based Freshwater Testing of the Siemens SiCURE Ballast Water Management System. March 15, 2010.
18. Land-Based Evaluations of the Siemens Water Technologies SiCURE Ballast Water Management System. September, 2010
19. Sodium Hydroxide (NaOH) Practicality Study. The Glosten Associates, 2010.
20. Great Ships Initiative Bench-Scale Test Findings Technical Report – Sodium Hydroxide, 2009.
21. National Park Service Ballast Water Treatment: Ranger III Ballast Water Chloriniation-Dechlorination Proposal. Michigan Technological University, 2010.
22. Great Ships Initiative Bench-Scale Test Findings Technical Report – Public Sodium Hypochlorite Solution, 2009.
23. Hand, David. 7 February, 2011. E-mail.
24. Covich-Williams fuel dock price quote, 1/12/11.

25. Boyd, C.E., and C. S. Tucker. Pond Aquaculture Water Quality Management. Boston: Kluwer Academic, 1998.

26. GSI Interim Brief for the EPA Science Advisory Board on IMO-Consistent Freshwater Land-Based Testing Results of AlfaWall AB PureBallast BWTS. January 27, 2010.

27. State Requirements for the NPDES Vessel General Permit. ECM Maritime Services LLC. 2009.

28. Application for Final Approval of a Ballast Water Management System using Active Substances. Alfa-Laval. 2006

Executive Summary

This study evaluated a number of existing ballast treatment technologies based on their compatibility with small vessels operating exclusively in fresh water. This segment of the shipping fleet represents only a small percentage of global tonnage and, therefore, a minor market in the eyes of technology developers. An unintended consequence is that such vessels have limited options for treating ballast water since few treatment systems are designed specifically for their needs.

This study examined seven (7) different treatment technologies. The field of candidates was initially narrowed based on broad factors seen as critical go/no-go indicators of compatibility with small capacity fresh water vessels. This field of seven was comprised of five (5) commercially available treatment technologies and two (2) technologies still under development.

Evaluation of the treatment systems was accomplished through analysis relative to a series of measurable indicators. These indicators (evaluation criteria) were efficacy, residual toxicity, size/weight, electrical load, lifecycle costs, and safety. During evaluation it was revealed that two of the technologies are ruled out entirely because they are commercially unavailable (globally or to the Great Lakes market). One other treatment system comes with significant risk due to technical and regulatory concerns. The technologies remaining have variable compatibilities with small vessels which are ranked accordingly. A graphical depiction of the evaluation process is shown below.

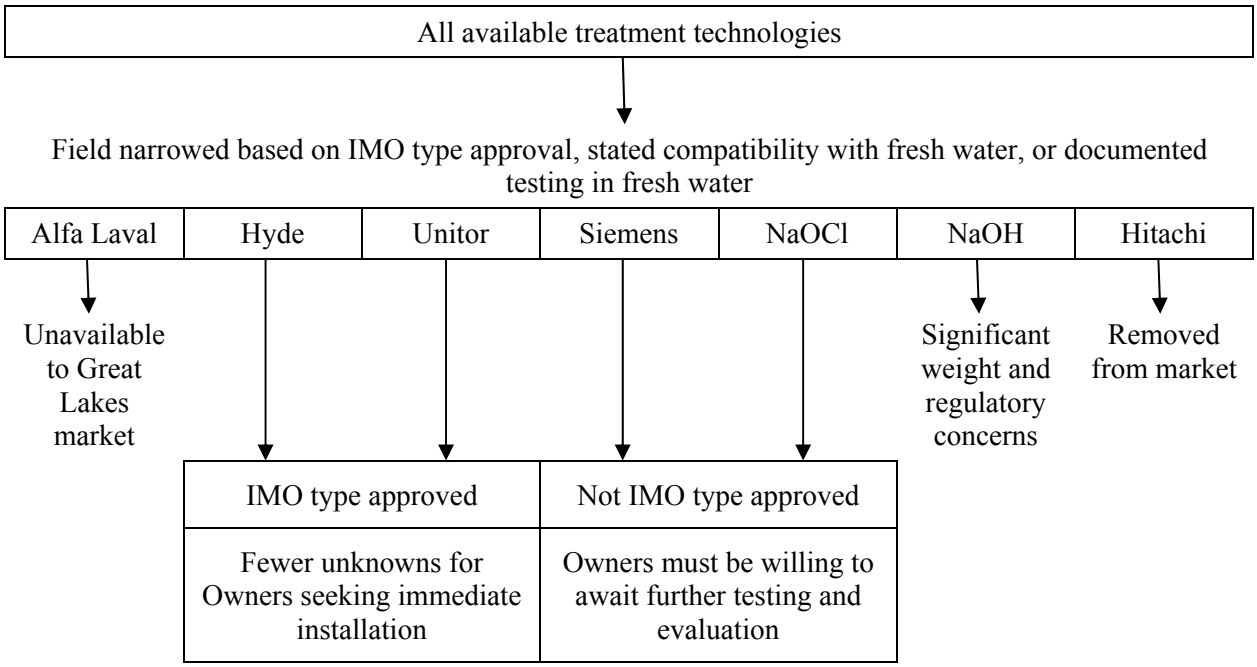

Section 1 Introduction

The development of ballast water treatment technologies to date has been largely focused on finding solutions for large ships operating internationally on the open seas. The market offers a variety of treatment solutions for ships that carry high volumes of salt water ballast for extended periods. Small vessels that operate exclusively in fresh water are at a disadvantage when it comes to finding treatment solutions suited for their needs. The disadvantage stems from several factors which include limitations in physical size, short voyage durations, and operation in low salinity water.

The intent of this study is to document known information on available Ballast Water Treatment System (BWTS) technologies and, where possible, to evaluate them based on their compatibility with small vessels operating exclusively in fresh water. A total of seven (7) BWTS devices in various stages of development have been chosen for this evaluation. The result of this study is a comparison that will allow owners and operators of such vessels to determine which technologies are best suited for their specific applications.

Section 2 Ballast Water Treatment Regulations

The treatment of ship's ballast water is the subject of overlapping and disparate regulations that are in various stages of implementation. U.S. registered ships operating exclusively in the Great Lakes could potentially be required to comply with laws enforced by international, national, and local bodies. A brief discussion of the rules is included here to provide context for this evaluation.

2.1 International

The International Maritime Organization (IMO) has adopted the International Convention for the Control and Management of Ships' Ballast Water and Sediments (Reference 1). The Convention sets forth rules and a phased timeline for ballast water treatment requirements. Pertinent facts are identified below.

- The Convention will apply to all vessels flagged in countries Party to the Convention (vessels operating exclusively in the waters of one Party may be exempt).
- Regulation D-2 of the Convention prescribes discharge standards for organisms and pathogens that may be discharged with ship's ballast water.
- Protocols have been published for evaluating system performance relative to IMO standards (IMO G8 and G9 guidelines). These protocols do not specifically require testing in fresh water or testing with short-duration residence times (time that treated ballast water must be retained in tanks).
- An existing small capacity vessel (<1,500 m^3) built prior to 2009 will be required to meet the D-2 standard following its first intermediate or renewal survey starting in 2017.
- There are currently a wide variety of commercially available treatment systems that have demonstrated compliance with the D-2 standard and have gained IMO type approval.

Once ratified, U.S. registered ships operating exclusively in the Great Lakes could be subject to the IMO regulations if they discharge ballast in both U.S. and Canadian waters. However, enforcement on this basis has yet to be seen and will remain unknown until the Convention is ratified. At this time, the implications of IMO for small vessels within the Great Lakes are unclear.

2.2 National

The United States currently has a proposed rule for ballast water treatment. As with the IMO Convention, this proposed rule sets forth a timeline for ballast water treatment requirements. Pertinent facts are discussed below.

- The regulation will apply to all commercial ships discharging ballast in U.S. waters. Vessels operating exclusively in one Captain of the Port (COTP) zone would be exempt.
- The proposed rule prescribes discharge standards for organisms and pathogens that may be discharged with ship's ballast water. There are two phases of implementation, each with its own timeline and performance standard.

- The Phase 1 performance standard is consonant with the IMO D-2 standard. Small capacity vessels (<1,500 m^3) built prior to 2012 would be required to meet Phase 1 standard by the time of first drydocking after 1 January 2016.
- The Phase 2 performance standard is, in some cases, up to 1000 times more stringent than Phase 1. Small capacity vessels (<1,500 m^3) built prior to 2012 would be required to meet Phase 2 requirements i) by the time of first drydocking after 1 January 2016, or ii) five years after a Phase 1 system is installed, whichever is later.
- The proposed rule is subject to further evaluation, which may influence final rule requirements.
- There are currently no systems available that have documented compliance with the Phase 2 standard. Formal testing protocols to demonstrate compliance have only recently been published.

U.S. vessels are also regulated by the Environmental Protection Agency (EPA) Vessel General Permit (VGP) program. This program regulates incidental discharges from vessels that occur as part of normal operation such as deck-run-off, bilge water, and waste water. Pertinent facts are discussed below.

- Treatment of ballast water for all vessels is not an explicit requirement under the VGP program.
- There is a requirement that prohibits the discharge of untreated or un-exchanged ballast water within designated federally protected waters.
- Federally protected waters in the Great Lakes include (but are not limited to) Isle Royale National Park, Grand Portage National Monument, and Pictured Rocks National Lakeshore.

If passed into law, U.S. registered ships operating exclusively in the Great Lakes could be subject to the Phase 1 and Phase 2 standards if their service requires them to operate in more than one COTP zone. Vessels that operate in or near any of the federally protected waters will be required to treat or exchange ballast water under the VGP requirements.

2.3 Local

A number of states bordering the Great Lakes have existing or proposed laws which overlap the national and international regulations discussed above.

- Michigan is the first state to have implemented a permitting program, requiring oceangoing ships discharging ballast water to obtain a permit from the state.
- Illinois, Indiana, Minnesota, and Ohio have proposed requirements that are consistent with the IMO D-2 standard.
- New York and Pennsylvania have introduced proposed rules that exceed D-2.
- Some states have lists of approved ballast treatment technologies that may be installed on vessels. These lists have provisions allowing new technologies to gain acceptance.

A vessel would be required to carry multiple state-issued permits and comply with each state's individual ballast water requirements if a vessel transited from one state's waters to another's.

In summary, U.S. vessels operating on the Great Lakes could be subject to potential regulation from each of the bodies described above. However, the IMO standard is the most prevalent used in the development of commercial treatment technologies. At this time, commercial treatment technologies that meet national and state regulations have not been developed.

Section 3 Platform Vessel

3.1 General

Treatment system evaluation is based on compatibility with vessels similar to the *M/V Ranger III.* The subject vessel is a U.S. registered steel hull passenger ship operating exclusively on the Great Lakes. The vessel is inspected by the U.S. Coast Guard under the provisions of Subchapter H (Passenger Vessels), and is classed by the American Bureau of Shipping. Pertinent data is shown below.

Principle Characteristics

Length Overall..... 165'-0"
Beam: ..... 34'-0"
Depth: ..... 15'-0"
Ballast Capacity: ..... 37,000 gal
Built:..... 1958
Official Number: 277361
IMO Number:..... 7618234
Gross Tonnage (US):..... 648

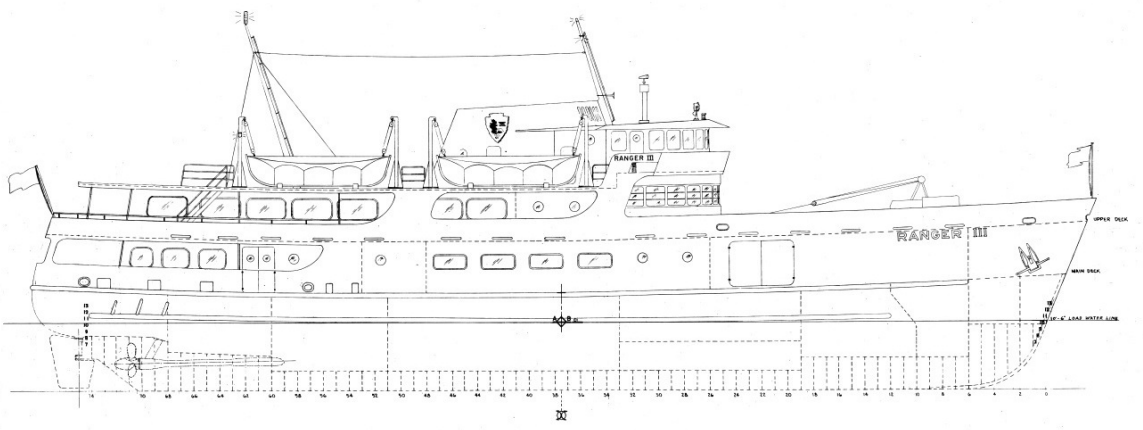

Figure 1 – M/V Ranger III

3.2 Service Profile

M/V Ranger III carries passengers and cargo between Houghton, MI and the Isle Royale National Park located on Lake Superior. The route is 76 statute miles, a distance covered in approximately 6-1/2 hrs.

The vessel's operating season is subject to ice conditions on Lake Superior, but generally lasts from May to October each year. During peak season, the vessel makes a single one-way crossing per day and stays overnight at the destination, completing the return crossing the following day.

For evaluation it is assumed that the platform vessel has a service profile similar to that of *Ranger III*; the primary characteristics being the area of service (all voyages taking place on the Great Lakes) and the voyage duration and frequency (one voyage per day lasting approximately 6-1/2 hrs).

3.3 Ballasting Cycles

Due to stability limitations, the *Ranger III* must carry ballast during each crossing. The ballasting scheme will vary depending on the cargo loading plan. Ballast is taken on after the vessel has left the dock (to avoid drawing in sediment), but before the boat reaches the exposed waters of Lake Superior. Upon arrival at the destination, the vessel must discharge ballast in order to stay within draft restrictions, and in some cases, to trim the vessel to avoid interference between the cargo loading doors and the dock. For these reasons, uptake and discharge of ballast must occur within the same 6-1/2 hour window in which the single crossing takes place.

The ballast system utilizes a single stage self-priming centrifugal pump capable of delivering 180 GPM at 30 ft TDH. In general, the vessel operates with no slack ballast tanks, thereby requiring that all tanks be either completely empty or completely full.

For evaluation, it is assumed that the platform vessel will have similar ballasting requirements as *Ranger III* with the uptake and discharge of ballast water taking place within the single-voyage timeframe. It is assumed that the ballast pumping system must operate for 2 hours per crossing (one hour each for uptake and discharge) at the 180 GPM flow rate. The treatment system operating hours will vary based on the method of treatment. Systems that treat only on uptake will have half the operating hours of systems that treat on uptake and discharge.

3.4 Electrical Loads and Generating Capacity

The *Ranger III* is fitted with two 55 kW ship service generators capable of operating in parallel. Under normal at-sea conditions, both generators are paralleled (for redundancy) and share a combined load of approximately 20 kW. This load does not include the ballast pump.

The high amount of reserve generating capacity on the *Ranger III* is uncharacteristic of most small vessels. For evaluation it is assumed that the platform vessel will have the same at-sea loads but with a reduced generating capacity of only 60 kW.

Section 4 Evaluation Procedure

4.1 Evaluation Categories

Candidate ballast water treatment system (BWTS) technologies are evaluated based on their characteristics in a number of categories. Within each category, the technologies are assigned a numerical ranking; the value 1 represents the highest degree of compatibility with the platform vessel (or 1st place) and higher numbers representing diminished compatibility. The rankings are based on quantitative comparisons of measurable values. For instance, systems with larger space envelopes or higher costs receive diminished scores (2 = 2nd place, 3 = 3rd place, etc). The following evaluation categories are used: efficacy, residual toxicity, equipment size and weight, electrical load, lifecycle costs, and safety.

4.1.1 Efficacy

Efficacy is a measure of a treatment system's effectiveness at killing or removing organisms from ballast water. Evaluation in this category is based on published results of biological efficacy tests. The best score is assigned to the system that can demonstrate the highest levels of efficacy in fresh water with minimal hold time.

4.1.2 Residual Toxicity

Residual toxicity is a measure of the potential harm that treated water may cause to the environment upon discharge. This characteristic is measured by testing for acute and chronic toxicity across multiple species, and by measuring residual levels of active substances. Evaluation in this category is based on whether a system uses active substances, and levels of residual biocide that are discharged in the ballast water. The best score is assigned to the systems that do not utilize active substances. Systems utilizing active substances will be scored progressively lower based on personnel exposure to those substances and compliance with national and state limits on residual biocides. Such limits are identified in Reference 27.

4.1.3 Equipment Size and Weight

Equipment size and weight are significant factors for small vessels. In most cases, a small vessel will have limited space to add equipment and minimal tolerance to weight growth. Weight increases may have an impact on vessel payload and stability. The approach taken for evaluation in this category is to assign the best score to the system that occupies the smallest footprint and has the lowest weight.

4.1.4 Electrical Load

Electrical load is another practical consideration that may challenge certain treatment systems. Small vessels generally do not have large power generation capacity. Installation of larger generators and switchboards incur significant engineering and shipyard costs. Therefore evaluation in this category is based on the magnitude of electrical power required to operate the treatment systems. This electrical load takes into account the load of the treatment device itself plus any additional auxiliaries required to support its operation. The intent is to illustrate the 'delta' in electrical load between the vessel's current loads during ballasting and the loads

that would exist if the system were to be installed. The best score is assigned to the system with the lowest electrical power demand.

4.1.5 Lifecycle Costs

Lifecycle costs are determined by developing estimated costs in two discreet categories: i) capital costs, and ii) operating/maintenance costs.

Capital costs are those associated with the one-time purchase and installation of a treatment system. Costs in this category include indirect costs associated with shipyard labor, materials, equipment relocation, engineering services, drydocking, and other temporary services needed to provide a permanent and fully approved installation.

Operating/maintenance costs are those costs necessary to operate and maintain a system over time. Costs in this category include those associated with operation, preventive maintenance, spare parts, consumables, and fuel (attributed to higher electrical loads).

Evaluation in this category is based on estimated lifecycle costs over 25 years.

4.1.6 Safety

Safety is a concern in systems which require the storage or transfer of harmful chemical agents. Evaluation in this category is based on the potential exposure to harmful agents arising from routine operating procedures. The best score is assigned to systems that do not require handling of harmful agents.

4.2 Indirect Considerations (Corrosion)

A significant concern that may influence treatment system selection is that of corrosion. Steel vessels operating in fresh water are afforded much lower corrosion rates than vessels operating in a seawater environment. This service factor has allowed fresh water vessels to operate without the use of protective coatings inside ballast tanks.

Some treatment systems discussed in this report rely on the use of chemical oxidizing agents that are added to ballast water and held in the ballast tanks for a prolonged period of time. It is known that direct exposure of oxidizing agents to bare steel will accelerate corrosion. A vessel owner must consider how this may increase their operational costs; requiring new protective coatings or increasing the frequency of steel renewal (or both).

Corrosion rates are dependent on a vast array of factors which include salinity, temperature, oxygen content, chemical concentration, and exposure duration. The sheer number of variables makes it difficult (if not impossible) to quantify the degree to which corrosion will be accelerated on any particular vessel. In this evaluation the risk of corrosion as a cost factor is identified where it applies, but scoring or ranking of this variable is not included.

4.3 Global Assumptions

The following global assumptions are used throughout the evaluation:

- Fuel consumption characteristics for shipboard generators are based on published data for four stroke high speed engines rated at less than 100 brake horsepower. This data is shown in Appendix C.

- For the purpose of generating projected lifecycle costs over 25 years, annual inflation rates of 3% for labor and spare parts and 8% for fuel are assumed. The cost of No. 2 diesel fuel in 2011 dollars is taken as $2.90 per gallon (Reference 24).
- Shipyard hourly labor rates are assumed to be $60/hr.
- Shipboard engineering labor rates are assumed to be $100/hr.

Section 5 Candidate Technologies

5.1 Selection Process

An initial field of seven (7) ballast treatment technologies is chosen for evaluation. The field has been narrowed from published lists of commercially available treatment technologies (References 2 and 3) as well as other known technologies still under development. This narrowing of the field has been based on compatibility with fresh water and ability to meet the IMO D-2 performance standards with minimal hold/contact time. For systems still under development, selection has been based on the system having undergone testing in fresh water.

In some cases there are multiple systems offering the same method of treatment. For instance, there are at least four manufacturers whose systems utilize U/V sterilization in conjunction with filtration. In such cases, it has been chosen to identity only one system of each type so that a representative cross section may be evaluated. The selected treatment systems are described below.

5.1.1 Alfa Laval PureBallast

The Alfa Laval system relies on a reaction between a titanium dioxide catalyst and ultraviolet (UV) light. This reaction generates free radicals which chemically disinfect the water. This process is supplemented by mechanical filtration. The system requires no additives and does not require neutralization of discharged ballast water. The manufacturer indicates there is no minimum residence time (time that treated ballast water must remain in the tank).

5.1.2 Hyde Guardian Ballast Water Treatment System

The Hyde system relies on disinfection from direct exposure to UV radiation in conjunction with mechanical filtration. The system uses no additives and does not require neutralization of discharged ballast water. The system is fully functional in fresh water and requires no minimum residence time.

5.1.3 Unitor Ballast Water Treatment System

The Unitor system relies on induced cavitation inside a reaction chamber as a means to damage cell walls of organisms. This process is supplemented by the injection of either sodium hypochlorite (via electro-chlorination in seawater) and ozone from an O_3 generator. The concentration of hypochlorite and ozone is claimed to be low enough (<1 ppm) that tank corrosion and neutralization of discharged ballast water are not a concern. The manufacturer indicates that the system is fully functional in fresh water and that no minimum residence time is required.

5.1.4 Hitachi ClearBallast Purification System

The Hitachi system relies on the use of coagulants and magnetic powder to bind organisms into clusters. These clusters are filtered from the ballast water via magnetic separation. The resulting ballast effluent is claimed to carry no harmful substances and may be discharged without neutralization. The separated sludge must be retained on board and periodically discharged. Consumable supplies of coagulant and magnetic power must be replenished.

5.1.5 Siemens SiCURE Ballast Water Management System

The Siemens SiCURE system relies on sodium hypochlorite to disinfect ballast water. For vessels operating in seawater the hypochlorite is generated on board through electro-chlorination (using only a partial volume of the full ballast flow rate). For vessels operating in fresh water, the use of stored sodium hypochlorite (commercial bleach solution) may be used in lieu of electro-chlorination. Mechanical filtration is used in conjunction with the disinfection process during uptake. After a specified residence time, the water may be discharged overboard. Neutralizing agent is added to the effluent as it is discharged overboard.

5.1.6 Sodium Hydroxide Dosing (under development by USGS)

This system currently under development by the United States Geological Survey (USGS) relies on the injection of sodium hydroxide solution (caustic soda) into the ballast water upon uptake. The injection raises the pH of the ballast water to levels that are toxic to organisms. After a specified residence time, the pH is returned to normal levels by neutralization with CO_2 prior to discharge overboard.

5.1.7 Sodium Hypochlorite Dosing (under development by NPS and Michigan Technological University)

This system currently under development by the United States National Park Service (NPS) and Michigan Technological University relies on the injection of sodium hypochlorite solution (commercial bleach) into the ballast water upon uptake. After a specified residence time, the residual hypochlorite is neutralized with sodium sulfite solution prior to discharge.

5.2 Market Limitations

At the time that selection of candidate technologies began in 2010, there were ten (10) known commercial treatment systems on the market with IMO type approval. During the selection process it was discovered that at least one system had been removed from the market after the manufacturer (Hamann AG) learned that performance could not be maintained in extremely cold temperatures.

During the course of evaluation it was subsequently revealed that the Hitachi and Alfa-Laval systems were commercially unavailable for fresh water applications. In the case of Hitachi, the system has been pulled from the market completely while Alfa-Laval is only refraining from marketing to Great Lakes vessels. The circumstances surrounding these actions are described in subsequent sections of this report.

The factors which led to the removal of these three devices from the market are different in each case but are indicative of a broader issue; that compliance with IMO requirements is not analogous to compatibility with every set of service conditions. Of the ten systems that began with type approval, only seven remain available to the subject market.

Section 6 System Discussion

6.1 Alfa Laval PureBallast

Note: Alfa-Laval has indicated that the PureBallast system will not be commercially available to vessels operating on the Great Lakes. This stems from a land based test in fresh water in which the device did not function properly. While the specific causes and possible resolution of the issue have been identified (Reference 26), the manufacturer has elected not to pursue further testing in fresh water and has indicated their desire to pursue only the seawater (IMO) market. A discussion of the pertinent system data is included in this report for information only.

6.1.1 Description

The Alfa Laval PureBallast treatment system utilizes a combination of mechanical filtration and photocatalytic reaction to remove or inactivate organisms in the ballast stream. Ballast water is treated during both uptake and discharge.

During uptake, the ballast water is pumped through a filter assembly. Organisms and particulates separated by the filter are back flushed and returned overboard to the uptake source. Following filtration, the ballast water passes through a reactor where UV light is directed toward a titanium dioxide catalyst thereby generating radicals which disinfect the water. These radicals exist only for a brief period and dissipate before the water leaves the reactor. This process works in tandem with sterilization resulting from direct exposure to UV radiation. During discharge, the ballast water bypasses the filter manifold and passes through the reactor only before being discharged overboard.

The smallest standard device available from Alfa Laval utilizes a single reactor and has a minimum processing capacity of 220 GPM (50 m^3/hr). Reduced flow rates through the reactor are not permissible. Therefore, evaluation of this system will be based on the assumption that the ballast pump must be upsized to accommodate the increase in flow rate to 220 GPM (although it is possible for the existing piping to accommodate the higher flow rate).

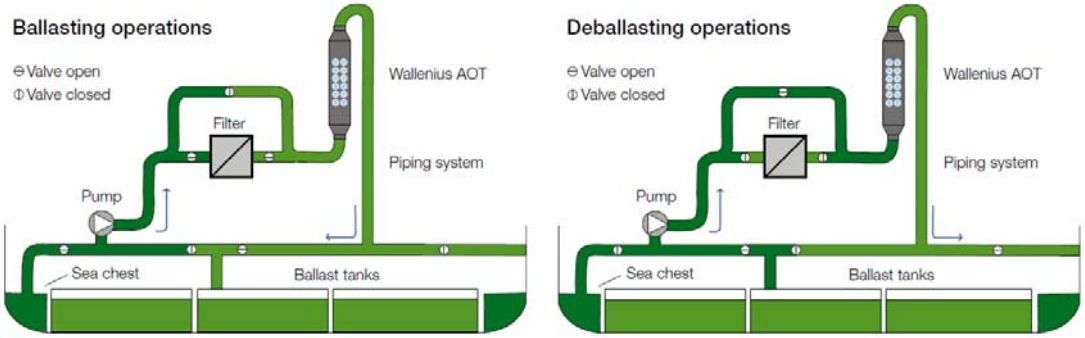

Figure 2 – Alfa Laval PureBallast (image from Reference 4)

The system requires a variety of support system connections. Separate circuit fresh water cooling is required for cooling the electronics in the reactor assembly. Auxiliary fresh water

and compressed air connections are also required to enable reactor flushing and filter back-flushing.

6.1.2 Efficacy

The PureBallast system has been tested in accordance with Convention protocols and has been granted IMO type approval (References 2 through 4). Detailed results of efficacy tests have not been made available by the manufacturer and it is unknown whether testing occurred in fresh water. The manufacturer indicates that efficacy can be achieved with no minimum residence time. Because the system is type approved it is known that the tests demonstrated efficacy levels within the following limits.

Table 1 - Efficacy Limits

Organisms > 50 µm (per m^3)	**Organisms >10µm and <50µm** (per mL)	**Escherichia Coli** (cfu/100 mL)	**Intestinal Enterococci** (cfu/100 mL)	**Toxicogenic Vibrio Cholerae** (cfu/100 mL)
<10	<10	<250	<100	<1

6.1.3 Residual Toxicity

It is known that the Alfa-Laval system uses active substances in the form of radicals that are generated internally by the photocatalytic reaction. Detailed results of residual toxicity tests have not been made available by the manufacturer. However, it is known that the process does not cause the formation of chlorine or bromine. The radicals are similar to those that occur naturally in the surface layer of seawater exposed to the sun (Reference 28).

6.1.4 Equipment Size and Weight

The PureBallast system is comprised of several independently mounted components. These include the filter assembly, reactor vessel (or AOT unit), CIP unit, and control cabinet. A summary of the total footprint and weight is shown below.

Table 2 – Summary of Total Footprint and Weight

	Footprint (sq ft)	**Weight (lbs)**
Filter Assembly	6	1,014
AOT Unit	13	1,460
CIP Unit	7	430
Control Cabinet	2	110
Total	**28**	**3,014**

6.1.5 Electrical Load

The electrical load for the system is 36 kW for the reactor unit plus 1 kW for the controller. The system will also incur a 5 kW load increase due to the operation of a ballast pump with higher head capacity (assuming 220 GPM at 60 ft TDH with a pump efficiency of 50%). An electrical load of 250 watts is also introduced due to the addition of a fresh water cooling pump (assuming 5 GPM at 30 ft TDH with a pump efficiency of 50%). In conjunction, these

components bring the total load to 42 kW. It is noted that this substantial electrical load can be accommodated by *Ranger III* but falls beyond the assumed generating capacity of the platform vessel. Some small vessels would require installation of larger generators and switchboards to compensate.

The system is configured to operate on 480 VAC power. Therefore, a dedicated transformer bank will be required.

6.1.6 Capital Costs

The estimated one-time capital costs for installing an Alfa Laval PureBallast treatment system on the platform vessel are $465,000. This estimated cost reflects installation of a new ballast pump and utilization of existing system piping. The installation tasks can be accomplished with the vessel afloat. Confined space entry is not required. Temporary removal/restoration of some machinery space outfitting will be required. Auxiliary fresh water cooling and compressed air connections are required, thereby requiring some modification to existing systems (see Appendix A).

6.1.7 Operating and Maintenance Costs

The estimated annual operating and maintenance costs for a PureBallast treatment system are $3,057 per year ($1,540 in maintenance costs and $1,517 in fuel costs). Routine preventive maintenance tasks include replacement of the UV lamps every 3,000 hours and replenishment of the clean-in-place fluid annually. Fuel costs reflect both generators operating at 100% of their maximum continuous rating (MCR) (see Appendix B).

6.1.8 Safety

The Alfa Laval system does not require the storage or handling of chemical agents. UV radiation is only employed inside the reactor and does not present a risk to personnel standing near the unit. Minor safety concerns arise when personnel are required to handle or replace UV lamps, but this handling does not put personnel in direct contact with harmful substances.

6.2 Hyde Guardian Ballast Water Treatment System

6.2.1 Description

The Hyde Guardian treatment system utilizes a combination of mechanical filtration and UV sterilization to remove or inactivate organisms in the ballast stream. Ballast water is treated during both uptake and discharge.

During uptake, the ballast water is pumped through a 50 micron disc filter manifold. Organisms and particulates separated by the filter are back flushed and returned overboard at the uptake source. Following filtration, the ballast water passes through a UV treatment chamber where the water is exposed to UV radiation emitted by a series of high intensity lamps.

During discharge, the ballast water bypasses the disc filter manifold and passes through the UV treatment chamber only before being discharged overboard.

The HG60 is the standard device with a maximum processing capacity of 264 GPM (60 m^3/hr). The manufacturer indicates that the reduced flow rate of 180 GPM through the treatment device is permissible. The evaluation shall be based on the assumption that all existing piping is retained. The increase in back pressure due to the filter assembly will require installation of booster pump.

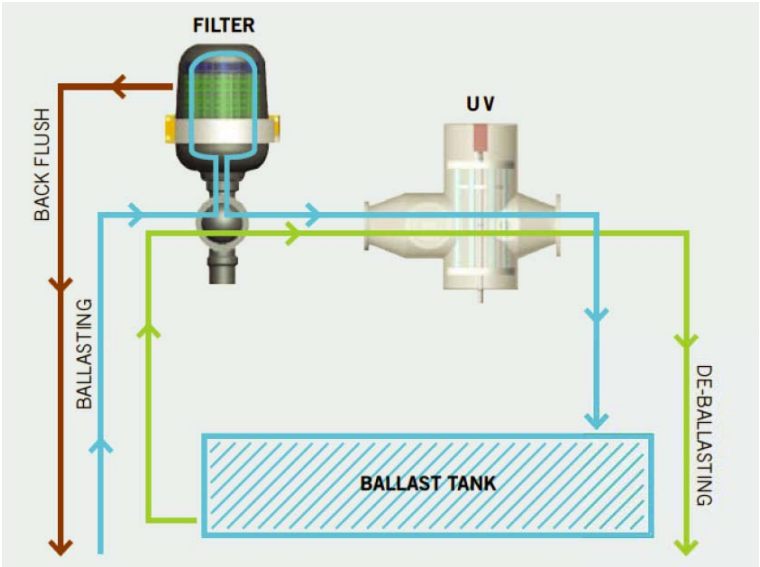

Figure 3 – Hyde Guardian BWTS (image from Reference 7)

6.2.2 Efficacy

The Hyde Guardian system has been tested in accordance with Convention protocols and has been granted IMO type approval. It is known that testing has occurred in seawater, but not in fresh water. However, the UV sterilization process is not reliant on salinity and does not require a minimum residence time after treatment occurs. A summary of published test results (References 9 and 10) is shown below.

Table 3 – Efficacy: Summary of Published Test Results

Organisms > 50 µm (per m^3)	Organisms >10µm and <50µm (per mL)	Escherichia Coli (cfu/100 mL)	Intestinal Enterococci (cfu/100 mL)	Toxicogenic Vibrio Cholerae (cfu/100 mL)
		Land Based Test Results		
2.4 – 2.9	<10	<0.1[1]	<1[1]	Information not available
		Shipboard Test Results		
0	0.002 – 1.18	nd	nd – 3.4	0

'nd' denotes not detectable
1 - denotes measurements in cfu/mL

6.2.3 Residual Toxicity

The Hyde system does not utilize or generate active substances. By-products from a UV treatment process may arise either as a direct result of photochemical reactions, or indirectly as a result of reactions with products of photochemical reactions. At the level of dosing used in the Hyde system, these effects are not present or not detectable. Testing found no significant differences between the toxicities of treated and non-treated ballast water (References 9 through 11).

6.2.4 Equipment Size and Weight

The HG60 treatment device is available as a skid mounted unit (all components mounted on a common frame) or as loose components installed separately. Total footprints and weights for the loose mounted option are shown below.

Table 4 – Loose Mounted Options, Footprint and Weight

	Footprint (sq ft)	Weight (lbs)
Filter Assembly	10	
UV Chamber	7	
Power Panel	4	
Control Cabinet	1	
Booster Pump	3	
Total	**25**	**972**

6.2.5 Electrical Load

The electrical power demand for the HG60 is 15 kW. The additional load due to the booster pump is estimated to be 2.2 kW, bringing the total load to 17.2 kW. The unit can be configured to operate using a variety of 3 phase voltages, thereby mitigating the need for a separate transformer.

6.2.6 Capital Costs

The estimated one-time capital costs for installing an HG60 treatment system on the platform vessel are approximately $304,000. This estimated cost reflects utilization of existing system piping and includes tasks that can be accomplished with the vessel afloat. Confined space entry is not required. Temporary removal/restoration of some machinery space outfitting will be required. An auxiliary compressed air connection is required to operate the automated valves that are mounted on the device (see Appendix A).

6.2.7 Operating and Maintenance Costs

The estimated annual operating and maintenance costs for an HG60 treatment system are $3,638 per year ($3,172 in maintenance costs and $466 in fuel costs). Routine preventive maintenance tasks include (but are not limited to) winterization, annual disc stack cleaning, annual cleaning of quartz sleeves and UV sensor, and replacement of UV lamps every five (5) years. Fuel costs reflect both generators operating at 60% MCR (see Appendix B).

6.2.8 Safety

The Hyde Guardian does not require the storage or handling of chemical agents. UV radiation is only employed inside the treatment chamber and does not present a risk to personnel standing near the unit. Minor safety concerns arise when personnel are required to handle or replace UV lamps, but this handling does not put personnel in direct contact with harmful substances.

6.3 Unitor Ballast Water Treatment System

6.3.1 Description

The Unitor treatment system employs a combination of cavitation, chemical treatment, and filtration to remove or inactivate organisms in the ballast stream. Ballast water is treated on uptake only. During uptake water is drawn through an in-line reactor vessel installed on the suction side of the ballast pump. The reactor houses both the cavitation and chemical treatment processes. A 40 micron filter downstream of the ballast pump separates organisms and sediments which are back-flushed overboard at the uptake source.

The cavitation process creates shear forces in the fluid which rupture the cell walls of entrained organisms. Chemical treatment is achieved with sodium hypochlorite (produced via electro-chlorination) and ozone (produced via separately mounted generator). These agents are injected into the reactor at low concentrations (< 1.0 ppm) and are neutralized almost immediately after injection. Chemical neutralization is not required.

Power is continuously supplied to both the hypochlorite and ozone generators. If the vessel operates in fresh water, the fall-off in hypochlorite generation is compensated for by the continued generation of ozone. A vessel operating in fresh water will rely primarily on the production of O_3 for disinfection with only minimal amounts of hypochlorite being generated.

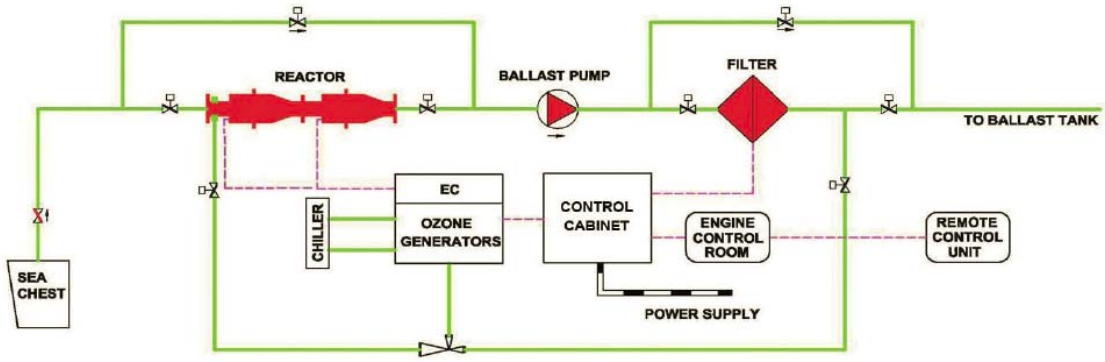

Figure 4 – Unitor Ballast Water Treatment System (image from Reference 12)

The manufacturer indicates that the smallest unit available has a minimum processing capacity of 440 GPM (100 m^3/hr). The evaluation of this system will be based on the assumption that the ballast pump and piping are upsized to accommodate the increase in flow rate.

6.3.2 Efficacy

The Unitor system has been tested in accordance with Convention protocols and has been granted IMO type approval (References 3 and 12). Detailed results of efficacy tests have not been made available by the manufacturer, but the issuance of an IMO type approval indicates that efficacy levels have been demonstrated to meet or exceed the parameters shown below.

Table 5 – Efficacy Limits

Organisms > 50 µm (per m^3)	**Organisms > 10µm and < 50µm** (per mL)	**Escherichia Coli** (cfu/100 mL)	**Intestinal Enterococci** (cfu/100 mL)	**Toxicogenic Vibrio Cholerae (cfu/100 mL)**
<10	<10	<250	<100	<1

Published literature from the manufacturer indicates that the system can achieve the same efficacy in fresh water or salt water (Reference 12). The manufacturer has also indicated that no minimum residence time is required to achieve efficacy.

6.3.3 Residual Toxicity

The Unitor system utilizes active substances (hypochlorite or ozone) which are generated within the device itself. Total residual oxidant (TRO) levels in treated discharged ballast water do not exceed 0.09 mg/L (Reference 13). It is noted that the IMO advisory panel recommended a minimum residence time of 3 hours based on the time required for the breakdown of hypochlorite in high salinity, low organic water. The required residence time may be less for a vessel operating in fresh water, although 3 hours is compatible with the platform vessel's voyage profile.

6.3.4 Equipment Size and Weight

The Unitor system is comprised of several independently mounted components. These include the reactor vessel, filter, ozone generator, chiller, and control cabinet. A summary of the total footprint and weight is shown below.

Table 6 – Summary of Total Footprint and Weight

	Footprint (sq ft)	Weight (lbs)
Reactor Vessel	8	
Filter Assembly	3	
ECA/Ozone Cabinet	6	
Chiller	4	
Control Cabinet	5	
Total	**26**	**3,750**

6.3.5 Electrical Load

The electrical power demand for the Unitor system is 5 kW. The electrical load to drive the larger ballast pump is estimated to be approximately 10 kW (assuming 440 GPM at 60 ft TDH with a pump efficiency of 50%), thereby bringing the total electrical load to 15 kW. The unit can be configured to operate using a variety of 3 phase voltages, thereby mitigating the need for a separate transformer.

6.3.6 Capital Costs

The estimated one-time capital costs for a Unitor treatment system are approximately $790,000. This estimated cost reflects complete rip-out and replacement of existing ballast system piping and components with those suited for the higher flow rate required by the treatment device. The scope of work requires drydocking of the vessel and tank cleaning/gas freeing. Temporary removal/restoration of some joiner and outfitting will be required (see Appendix A).

6.3.7 Operating and Maintenance Costs

The estimated annual operating and maintenance costs for the Unitor system are $4,255 per year ($4,022 in maintenance costs and $233 in fuel costs). Routine preventive maintenance tasks include filter candle replacement every 5 years and electrode replacement every 2.5 years hours. Fuel costs reflect both generators operating at 60% MCR (see Appendix B).

Ozone does have oxidizing properties which would be a corrosion concern if the agent remained active in the ballast piping and tanks for extended periods. The manufacturer indicates that the ozone remains active for only short duration inside the reactor vessel and that accelerated corrosion is not a concern.

6.3.8 Safety

The Unitor system does not require the storage or handling of chemical agents. There is some risk associated with the on-board generation of ozone. However, this agent is contained within the system itself and does not remain active in the ballast water for extended periods. Further, the ozone is drawn into the system at a slight vacuum. A loss of containment would result in air being drawn in rather than ozone leaking out.

6.4 Hitachi ClearBallast Purification System

Note: At the time of this study, Hitachi indicated that the ClearBallast system has been temporarily removed from the market to undergo a redesign to make the system smaller and more affordable. A comprehensive analysis of system performance across all evaluation categories is not possible at this time. Instead, a general overview of the technology is presented here.

6.4.1 Description

The Hitachi ClearBallast purification system is a multi-stage process which relies on magnetic separation of coagulated flocs to effect treatment. Ballast water is treated on uptake only. During uptake, water is pumped through a mixing tank into which magnetic power and coagulants are introduced. The coagulant causes sediments and organisms to floc together along with the magnetic powder. When the water passes through the separator the flocs adhere to magnetic discs. Following magnetic separation, the water is filtered before entering the ballast tanks.

Because this system relies on magnetic separation, it can function regardless of ambient salinity.

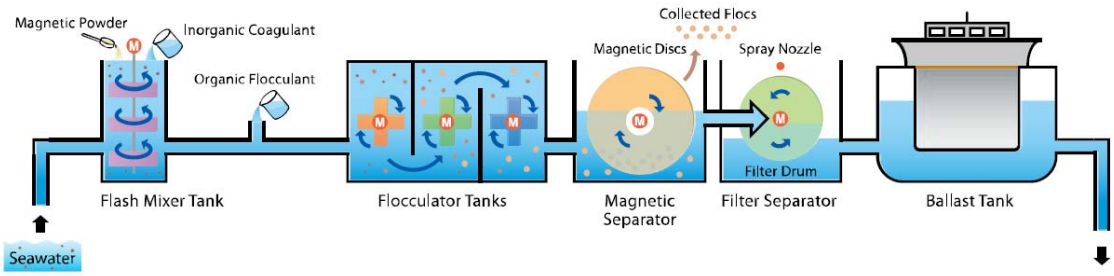

Figure 5 – Hitachi ClearBallast Purification System (image from Reference 14)

6.4.2 Efficacy

Before being removed from the market for cost and size issues, the Hitachi system was tested in accordance with Convention protocols and had been granted IMO type approval (References 2 and 3). Detailed results of efficacy tests have not been made available by the manufacturer. It is unknown whether testing occurred in fresh water. Because the system is type approved, it is known that the tests demonstrated efficacy levels within the following limits.

Table 7 – Efficacy Limits

Organisms > 50 µm (per m^3)	**Organisms > 10µm and < 50µm** (per mL)	**Escherichia Coli** (cfu/100 mL)	**Intestinal Enterococci** (cfu/100 mL)	**Toxicogenic Vibrio Cholerae** (cfu/100 mL)
<10	<10	<250	<100	<1

The manufacturer has indicated that the system can achieve the same efficacy in fresh water or salt water (Reference 14). The manufacturer has also indicated that no minimum residence time is required to achieve efficacy.

6.4.3 Residual Toxicity

(Cannot be evaluated at this time.)

6.4.4 Equipment Size and Weight

(Cannot be evaluated at this time.)

6.4.5 Electrical Load

(Cannot be evaluated at this time.)

6.4.6 Capital Costs

(Cannot be evaluated at this time.)

6.4.7 Operating and Maintenance Costs

(Cannot be evaluated at this time.)

6.4.8 Safety

(Cannot be evaluated at this time.)

6.5 Siemens SiCURE Ballast Water Management System

6.5.1 Description

The Siemens SiCURE ballast water management system employs a combination of filtration and electro-chlorination to remove or inactivate organisms in the ballast stream. Ballast water is treated on uptake and discharge.

During uptake the ballast water is pumped through a 40 micron filter. Organisms and particulates separated by the filter are back flushed and returned overboard at the uptake source. Following filtration a portion of the ballast flow is diverted to a hypochlorite generator. The resulting sodium hypochlorite is introduced back into the main flow in order to achieve dosing up to a maximum of 6 mg/L of chlorine. The actual dosage is controlled by a module which measures the oxidation reduction potential in the ballast stream and adjusts chlorine production in response.

During ballast discharge the ballast water chlorine levels are monitored. Levels greater than 0.1 mg/L are neutralized by a dosing unit (dechlorination module) that injects sodium sulfite.

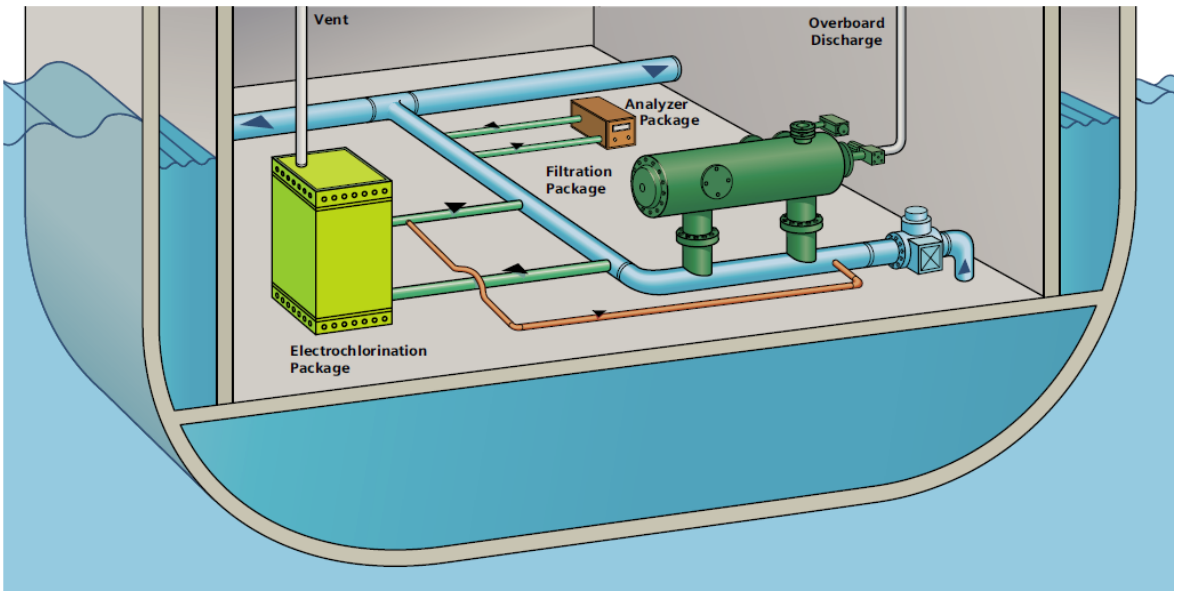

Figure 6 – Siemens SiCURE Ballast Water Management System (image from Reference 15)

Siemens has proposed a variant to the standard SiCURE system for vessels operating on the Great Lakes. The proposed variant would utilize injected chlorine in lieu of chlorine generated from seawater (Reference 16). Disinfection will occur in the same way regardless of whether the source of chlorine is bottled hypochlorite or hypochlorite generated from seawater (Reference 23). The required dosage level can be achieved with approximately 0.5 gallons of 12.5% chlorine solution (commercial bleach) for every 10,000 gallons of ballast. The dosage of neutralizing agent is approximately 0.32 gallons of 15% sodium sulfite solution for every 10,000 gallons of ballast.

To minimize system footprint and hazards associated with storage and transfer of bulk chemicals, it is assumed that this system would utilize two small permanently installed dosing tanks approximately 4.5 gallons (20 liters) in volume. Chemicals would be added to these tanks manually as needed. Bulk quantities of sodium hypochlorite and sodium sulfite solution

could be purchased at the beginning of each season with the consumables being taken aboard as needed prior to each voyage. The increase in back pressure due to the filter assembly will require a larger ballast pump to maintain the same flow rate.

6.5.2 Efficacy

At present, the SiCURE system does not have IMO type approval, but has made significant progress toward it. In 2009, the system underwent land based testing in fresh water at the Great Ships Initiative (GSI) facility and land based testing in seawater at the Maritime Environmental Resource Center (MERC) facility. Both series of tests were conducted in accordance with Convention protocols, and in both cases, the system demonstrated compliance with the IMO D-2 performance standard (References 17 and 18). A summary of published test results is shown below.

Table 8 – Efficacy: Summary of Published Test Results

Organisms > 50 µm (per m^3)	**Organisms > 10 µm and <50 µm** (per mL)	**Escherichia Coli** (cfu/100 mL)	**Intestinal Enterococci** (cfu/100 mL)	**Toxicogenic Vibrio Cholerae** (cfu/100 mL)
Land Based Test Results (5 day hold time)				
0.2 – 9	0 – 6.8	0 – 1	<1 – 107.4[1]	nd - <1
Land Based Test Results (24 hour hold time)				
1.2	0	0	0.33	0

'nd' denotes not detectable

1 - One trial resulted in an abnormally high count of enterococci in excess of the limits imposed by D-2. The testing authority identified why the data point could be dismissed and concluded that the system meets D-2 requirements.

6.5.3 Residual Toxicity

The Siemens system utilizes active substances. At present, the Siemens system does not have IMO type approval and, therefore, the residual toxicity is still under evaluation. Total residual chlorine was found to be below 0.1 mg/L in both series of land based tests (References 17 and 18). A single test was conducted by MERC to determine residual chlorine levels after a reduced 24 hour hold time. This test measured chlorine levels upstream and downstream of the Siemens dechlorination module. Measurements taken before neutralization found chlorine levels to be 0.59 mg/L, while measurements taken after neutralization found levels to be below 0.1 mg/L.

6.5.4 Equipment Size and Weight

The Siemens system is comprised of several independently mounted components. These include the filter vessel, ORP module, chlorination module, and dechlorination module. The treatment device is available as a skid mounted unit (all components mounted on a common frame) or as loose components installed separately. A summary of the total footprint and weight is shown below.

Table 9 – Summary of Total Footprint and Weight

	Footprint (sq ft)	Weight (lbs)
Filter Assembly	[redacted]	[redacted]
ORP Module	[redacted]	[redacted]
Dechlor Module	[redacted]	[redacted]
Dosing Module	[redacted]	[redacted]
Sodium Hypochlorite Storage Tank	[redacted]	[redacted]
Sodium Sulfite Storage Tank	[redacted]	[redacted]
Total	[redacted]	[redacted]

6.5.5 Electrical Load

The electrical power demand for the Siemens system is approximately [redacted], which is used to operate the filter back-flushing mechanism and chemical dosing modules. The higher capacity ballast pump will require an increase in motor size (assuming 180 GPM at 45 ft TDH with a pump efficiency of 50%), adding approximately 3 kW of additional electrical load and bringing the total to [redacted]. The system can be configured to operate using a variety of 3 phase voltages, thereby mitigating the need for a separate transformer.

6.5.6 Capital Costs

The estimated one-time capital costs for installing a Siemens SiCURE treatment system on the platform vessel are $385,000. This estimated cost reflects utilization of existing system piping and tasks that can be accomplished with the vessel afloat. Confined space entry is not required. Temporary removal/restoration of some machinery space outfitting will be required. An auxiliary compressed air connection is required for filter back-flushing (see Appendix A).

6.5.7 Operating and Maintenance Costs

The estimated annual operating and maintenance costs for the SiCURE treatment system are $4,334 per year ($4,070 in maintenance costs and $264 in fuel costs). Routine preventive maintenance tasks include weekly replenishment of chemical additives and annual replacement of ORP probes. Fuel costs reflect both generators operating at 50% MCR (see Appendix B).

The treatment of ballast water with bleach is a corrosion concern. The *Ranger III* has uncoated ballast tanks. The addition of an oxidizing agent to the ballast water will cause corrosion, but the impact to lifecycle costs cannot accurately be predicted. Corrosion rates will vary based on the concentration of the chemical agent and duration of exposure.

6.5.8 Safety

The Siemens system requires the handling of chemical agents: bleach and sodium sulfite solution. The risks are, however, minimized due to the small volumes required for treatment. The chemical agents used in the process need not be stored in bulk on the vessel, but rather can be kept at a shore based facility and carried aboard on an as-needed basis in small containers. There is risk of exposure in the handling of these chemicals, but the risks are manageable with the use of personal protective equipment (PPE) including gloves, goggles, and face shields.

6.6 Sodium Hydroxide Dosing

6.6.1 Description

The sodium hydroxide dosing system is currently under development. The system utilizes an added dosage of sodium hydroxide solution (also known as caustic soda) during uptake to increase ballast water pH to levels that are toxic to aquatic organisms.

The sodium hydroxide solution is stored in a tank at 50% concentration (by weight). This solution is drawn via educator into a stream of water parallel to the ballast stream, resulting in a diluted solution that has less than 4% sodium hydroxide concentration. This solution is then injected into the ballast stream on the discharge side of the ballast pump to achieve a pH of 12 (or approximately 0.05% NaOH concentration).

Neutralization of the water is accomplished by injection carbon dioxide gas into the water to create carbonic acid. This occurs as the ballast water is recirculated via permanently installed recirculation lines and isolation valves. The carbonic acid brings the pH levels back to levels acceptable for discharge to the environment. At the dosing levels described above, the system will consume 0.75 lbs per minute of caustic soda during uptake and 0.85 lbs per minute of CO_2 during neutralization.

*Note: the **Ranger III** has already been outfitted with recirculation piping described above. In order to provide a more accurate cost analysis of this option, it is assumed that the pipes have not yet been added.*

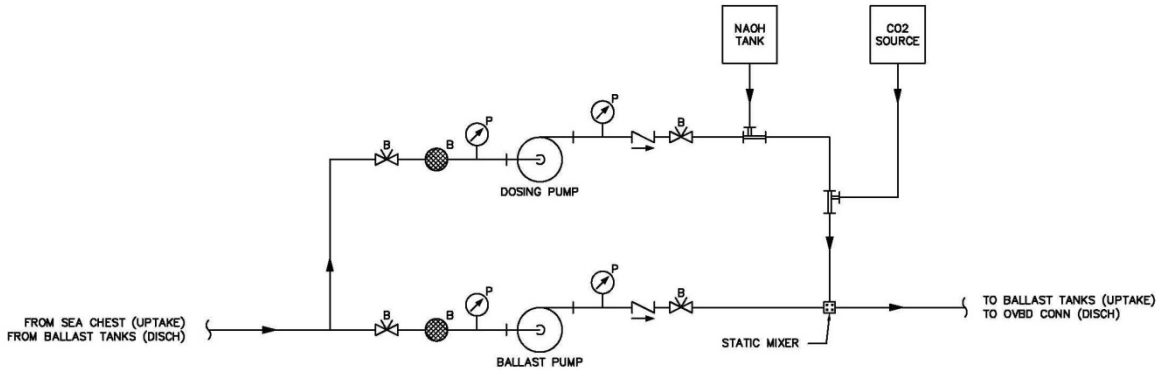

Figure 7 – Sodium Hydroxide Dosing System

A previous study which examined installation of this system on a larger vessel assumed that the chemical agents would be stored in large permanent tanks (Reference 19). It is possible to reduce the volumes of chemical agents carried aboard in order to mitigate concerns associated with weight, safety, and domestic vessel regulations. However this reduction in volume requires more frequent loading of the chemical agents, thereby increasing the manpower requirements beyond those of other systems. In the case of *Ranger III*, manpower limitations make the frequent loading of chemicals impractical. Therefore it is assumed that the platform vessel will utilize permanently installed storage tanks and newly installed piping arrangements for the caustic soda and CO_2.

Due to the vessel's stability limitations it is most appropriate to install such tanks in void compartments below the main deck. These compartments will, in turn, require additional safety features such as forced ventilation, CO_2 leak detection, and a CO_2 containment barrier. The caustic soda tank would be vented to a location in the weather that is clear of ventilation openings. The vent would be fitted with spill containment.

Caustic soda solution is a hazardous cargo regulated under 46 CFR Subchapter O, a set of rules typically applied to chemical tankers. It is uncertain whether bulk carriage of this cargo on existing vessels built for other types of service will be permitted by the governing regulatory agencies. Furthermore, it is uncertain whether existing vessel designs can be adapted to meet current tank vessel regulations without significant modification. It is often difficult and costly to retrofit an older vessel to meet rules with which it was never intended to comply. In this regard, the sodium hydroxide system has significant risks that other systems do not.

6.6.2 Efficacy

To date, the only published test results available are from bench-scale testing performed at the GSI facility. These tests are intended to be used as a tool to help refine system designs and treatment protocols, but they are not intended to meet the requirements set forth in the Convention protocols. Subsequent land based testing on a larger scale has been performed at GSI but detailed results of those tests are not yet published.

The results of these tests after 24 hours of dosing are tabulated below. It should be noted that this data is not presented in a way that allows direct comparison with the test data from systems tested in accordance with IMO guidelines.

Table 10 – Efficacy

Daphnids (survival %)	**Adult Copepods** (survival %)	**Newly Hatched Rotifers** (survival %)	**Rotifer Resting Eggs** (survival %)	**Green Alga** (survival %)
0%	0%	0%	not measured	41%

6.6.3 Residual Toxicity

The sodium hydroxide system utilizes active substances. At present, the sodium hydroxide system does not have IMO type approval. The residual toxicity tests that were performed as part of the bench scale testing did not achieve neutralization with carbonic acid as described above. Instead, the pH of the treated water was returned to normal levels through dilution (Reference 20).

It is known that the neutralization of sodium hydroxide solution with carbonic acid yields sodium carbonate and sodium bicarbonate as by-products (Reference 25) and that these are not considered harmful to marine life (Reference 19). Provided that neutralization sufficiently lowers the pH level the system can be operated without negative impact to ambient marine life. Documentation that demonstrates this result at full scale is not yet available.

It should be noted that variations in the pH of ambient water can influence the toxicity of the water being discharged.

6.6.4 Equipment Size and Weight

The sodium hydroxide system is comprised of several independently mounted components. The most significant components are the storage tanks for the chemical agents. To obtain storage volumes that will last an entire season, it is estimated the tanks must large enough to store approximately 800 gallons of NaOH solution and approximately 4,400 lbs of CO_2 (interpolated from Reference 19). The NaOH tank can be vented at atmospheric pressure whereas the CO2 tank would be a sealed pressure vessel style tank with refrigeration units to prevent gas boil-off.

A summary of the estimated footprint and weight is shown below.

Table 11 – Summary of Total Footprint and Weight

	Footprint (sq ft)	Weight (lbs)
NaOH Tank	25	10,500
CO_2 Tank	25	6,800
pH Sensor	1	20
Controller	0	4
NaOH Eductor	0	15
CO_2 Eductor	0	15
Static Mixer	0	25
Total	**53**	**17,379**

The weights identified above are substantial enough to trigger a detailed review of the platform vessel's stability characteristics. It is possible to install smaller tanks with the trade-off of increased frequency of bulk chemical transfer operations. This trade-off imposes greater risks due to the inherent safety concerns associated with bulk chemical transfers.

6.6.5 Electrical Load

The electrical load for the sodium hydroxide system equipment is minimal, being only that required to run the pH instrumentation and controller. However, additional loads are imposed by the CO2 refrigeration system and added compartment ventilation. These loads are estimated to add approximately 5 kW.

Note: The Ranger III is fitted with electrically actuated isolation valves in the recirculation lines for ease of operation. The use of valve actuators (as opposed to manually operated valves) is not required in order for the system to function. For the purpose of the study, the electrical loads attributed to valve actuators and their control panel are excluded.

There is additional power consumption due to the required recirculation of all treated ballast water, since this step is not required by other treatment systems. This load is represented by the full electrical load of the ballast pump (2.2 kW) over a period of approximately 1 hour per crossing.

6.6.6 Capital Costs

The estimated one-time capital costs for installing a sodium hydroxide treatment system on the platform vessel are $392,000. This estimated cost reflects utilization of existing system piping and tasks that can be accomplished with the vessel afloat. Confined space entry is required for the addition of recirculation piping. Temporary removal/restoration of some machinery space outfitting will be required (see Appendix A).

6.6.7 Operating and Maintenance Costs

The estimated annual operating and maintenance costs for the sodium hydroxide treatment system are $5,229 per year ($5,018 in maintenance costs and $211 in fuel costs). Routine preventive maintenance tasks include replenishment of chemical additives, annual inspection/maintenance of the pH sensors, and maintenance associated with the CO_2 refrigeration/vaporization plant. Fuel costs reflect both generators operating at 45% MCR (see Appendix B).

Between the temperatures of 65° F and 115° F, caustic soda does not represent a significant corrosion concern for uncoated steel pipe or tanks (Reference 19). Provided that the system does not retain any of the chemical during winter lay-up, there should be no significant steel corrosion issues.

6.6.8 Safety

The sodium hydroxide system requires the handling of hazardous substances. Direct exposure to caustic soda solution may cause chemical burns or permanent injury. The risk of environmental pollution or personnel exposure is moderate to high during the bulk transfer from a loading facility (truck or barge) to the platform vessel. Such transfers must be carefully monitored evolutions with constant communication between the vessel and the loading facility. Special containment measures must be in place to prevent incidental leakage from hoses or piping connections.

Once the chemical is successfully transferred to the vessel's containment system, the risk of exposure remains but is substantially reduced. Personnel operating the system are only subjected to the risk of accidental exposure in the event of a loss of containment (pipe or component rupture).

Exposure to CO_2 gas is also a potential hazard. CO_2 is an asphyxiant that is heavier than air and may accumulate and remain in a compartment which is not ventilated. This risk may be mitigated with the addition of CO_2 detection instrumentation and forced ventilation. The bulk transfer of CO_2 presents a safety risk to personnel. Liquefied CO_2 must be transferred under pressure at extremely low temperatures. Direct exposure is a safety hazard which must be managed by observing the necessary precautions during bulk transfer.

6.7 Sodium Hypochlorite Dosing

6.7.1 Description

The sodium hypochlorite dosing system is a non-commercial treatment solution developed jointly between the United States National Park Service (NPS) and Michigan Technological University. The system relies on an added dosage of chlorine during uptake to disinfect the ballast water. Chlorine is injected on the suction side of the ballast pump via a stainless steel injection quill. Injection 'upstream' of the pump ensures that the chemical is mixed with the ballast water as the two are agitated by passage through the pump. The system can dose the ballast water up to a maximum of 10 mg/L on uptake. A continuous chlorine analyzer monitors chlorine levels in the ballast water stream (downstream of the pump). Monitoring of the chlorine level and adjustment of the metering pump flow rate is accomplished manually.

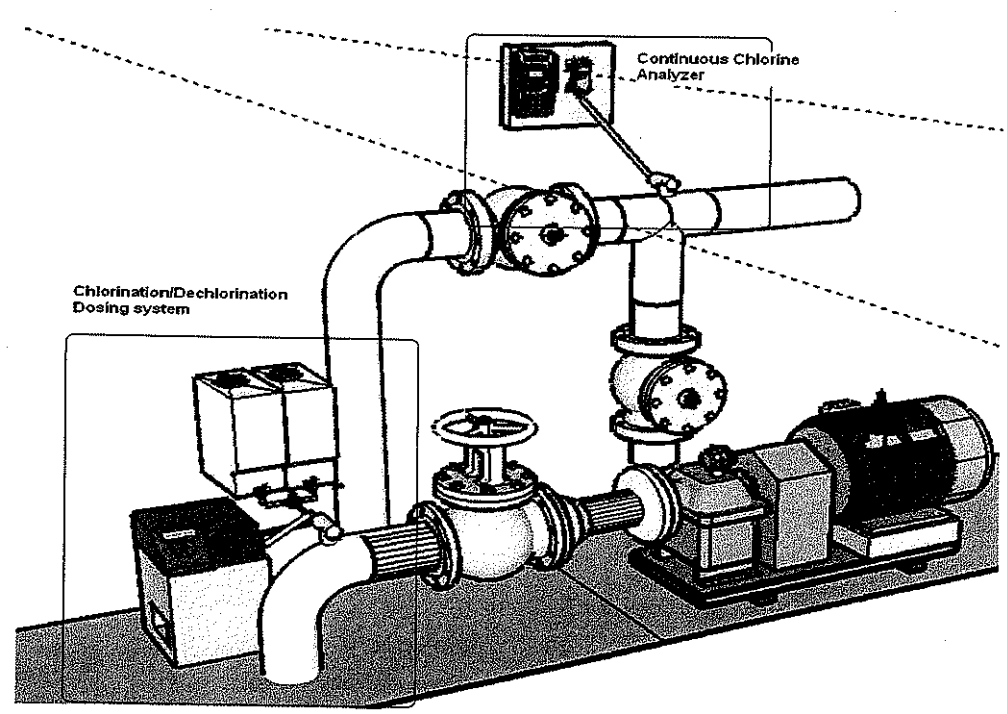

Figure 8 - Sodium Hypochlorite Dosing System (image from Reference 21)

Following uptake, the treated ballast water within each tank is recirculated via permanently installed recirculation lines and isolation valves. As it is being recirculated, a dose of neutralizing agent (Sodium Sulfite or Ascorbic Acid) is introduced via the injection quill. This process continues until the chlorine levels in the ballast tank are below acceptable discharge levels. At this point, the water may be discharged to the environment without additional treatment. The system requires the addition of new ballast piping to allow the contents of any one ballast tank to be recirculated.

Note: The Ranger III has already been outfitted with recirculation piping as described above. In order to provide a more accurate cost analysis of this option, it is assumed that the pipes have not yet been added.

6.7.2 Efficacy

To date, this treatment system has only undergone bench-scale testing at the GSI facility. These tests are intended to be used as a tool to help refine system designs and treatment protocols, but they are not intended to meet the requirements set forth in the IMO G8 or G9 protocols.

The results of these bench scale tests after 24 hours of dosing are tabulated below. It should be noted that this data is not presented in a way that allows direct comparison with the test data from systems tested in accordance with IMO guidelines.

Table 12 – Efficacy Bench Test Results

Daphnids (survival %)	Adult Copepods (survival %)	Newly Hatched Rotifers (survival %)	Rotifer Resting Eggs (survival %)	Green Alga (survival %)
0%	0%	not measured	not measured	0%

6.7.3 Residual Toxicity

The sodium hypochlorite system utilizes active substances. At present, the system does not have IMO type approval. Bench scale testing revealed that water treated with 3.0 mg/L chlorine and neutralized with 9.0 mg/L of ascorbic acid was found to have residual chlorine levels below the detection limit of 0.002 mg/L immediately after neutralization (Reference 22).

6.7.4 Equipment Size and Weight

The sodium hypochlorite system is comprised of several independently mounted components, which occupy a minimal amount of space within the vessel. These components include two (2) 20 liter carboys or chemical tanks for the disinfecting and neutralizing agents, a dosing pump, and continuous chlorine analyzer, and controller. A summary of the total footprint and weight is shown below.

Table 13 – Summary of Total Footprint and Weight

	Footprint (sq ft)	Weight (lbs)
Dosing pump	1	23
Chlorine Tank	1	50
Neutralizer Tank	1	50
Chlorine Sensor	1	20
Controller	0	4
Total	**4**	**147**

6.7.5 Electrical Load

The electrical load of the added system components is minimal. The combined power consumption of the pump, chlorine analyzer, and controller is less than 1 kW. This increase in power consumption is so small as to have an imperceptible effect on generator fuel consumption. All components can be fed from a single phase 120 VAC circuit.

Note: The Ranger III is fitted with electrically actuated isolation valves in the recirculation lines for ease of operation. The use of valve actuators (as opposed to manually operated valves) is not required in order for the system to function. For the purpose of the study, the electrical loads attributed to valve actuators and their control panel are excluded.

There is additional power consumption due to the required recirculation of all treated ballast water, since this step is not required by other treatment systems. This load is represented by the full electrical load of the ballast pump (2.2 kW) over a period of approximately 1 hour per crossing.

6.7.6 Capital Costs

The estimated one-time capital costs for installing a hypochlorite dosing system on the platform vessel is $92,000. This estimated cost reflects utilization of existing system piping and tasks that can be accomplished with the vessel afloat. The scope of work requires tank cleaning/gas freeing for installation of new recirculation piping. Temporary removal/restoration of some machinery space outfitting will be required (see Appendix A).

6.7.7 Operating and Maintenance Costs

The estimated annual operating and maintenance costs for the hypochlorite dosing system are $2,303 per year ($2,170 in maintenance costs and $133 in fuel costs). Maintenance tasks include replenishment of consumables (treatment chemicals), inspection of sensors, and replacement of sensor membranes (see Appendix B).

The treatment of ballast water with bleach is a corrosion concern. The *Ranger III* has uncoated ballast tanks. The addition of an oxidizing agent to the ballast water will cause corrosion, but the impact to lifecycle costs cannot accurately be predicted. Corrosion rates will vary based on the concentration of the chemical agent and duration of exposure.

6.7.8 Safety

The sodium hypochlorite system requires the handling of chemical agents: bleach and sodium sulfite solution. The risks are, however, minimized due to the small volumes required for treatment. The chemical agents used in the process need not be stored in bulk on the vessel but rather can be kept at a shore based facility and carried aboard on an as-needed basis in small containers. There is risk of exposure in the handling of these chemicals, but the risks are easily managed with the use of personal protective equipment (PPE) including gloves, goggles, and face shields.

Section 7 Ranking

7.1.1 Efficacy

Due to the absence of full scale efficacy testing for prototype systems, the ranking shall be divided into two groups based on whether test results at full scale are available. For systems that have undergone full scale testing ranking is based on a system's type approval status, known compatibility with fresh water (demonstrated through empirical test results or published statements from the technology developers), and achievement of efficacy in less than 6 hours. The two prototype systems are compared side by side based on the performance metrics used in bench scale testing (% survival across multiple species).

Table 14 – Efficacy Ranking

	Alfa Laval PureBallast	Hyde Guardian	Unitor BWTS	Hitachi ClearBallast	Siemens SiCURE	NaOH Dosing	NaOCl Dosing
> 50µm (per m^3)	<10	0 – 2.9	<10	<10	0.2 – 9	daphnids 0%	0%
< 50µm & >10 µm (per mL)	<10	<10	<10	<10	0 – 6.8	adult copepods 0%	0%
Escherichia Coli (cfu/ 100 mL)	<250	nd - <0.1[1]	<250	<250	0 – 1	newly hatched rotifers 0%	not measured
Intestinal Enterococci (cfu/100 mL)	<100	nd – 3.4[1]	<100	<100	<1 – 57.96	rotifer resting eggs not measured	not measured
Toxicogenic Vibrio (cfu/mL)	<1	0	<1	<1	<1	green alga 47%	0%
IMO Type Approved	✓	✓	✓	✓			
Compatible w/ fresh water	unknown	known	stated by mfg	stated by mfg	known	known	known
Required residence time	no mininum	no minimum	no minimum	no minimum	24 hrs[3]	variable[2]	variable[2]
Ranking	**4**	**1**	**1**	**1**	**5**	**not ranked**	

'nd' denotes not detectable

1 - measurements shown are per mL

2 - required residence time will vary based on concentration of biocides added

3 - 24 hours was the minimum hold time used to demonstrate efficacy. It may be possible to achieve efficacy in less time if concentrations are varied.

The comparison of the two prototype systems reveals that a conclusive ranking of efficacy cannot be reached because not all of the parameters were measured in all of the tests. National Park Service water quality experts will review future efficacy test results in detail and may assign rankings at a later date.

7.1.2 Residual Toxicity

Ranking of residual toxicity is based on whether active substances are used, and if so whether residual levels are within limits imposed by U.S. and state laws. The ranking shown below is predicated on each system achieving the same efficacy. Notable exceptions for the Sodium Hydroxide and Sodium Hypochlorite system are addressed below.

Sodium Hydroxide is a unique exception in this category. The byproducts of treatment (sodium carbonate and sodium bicarbonate) are known to be benign to fresh water species (References 19 and 25). It is understood that scaling up the system will release more of these byproducts to the environment but their benign characteristics remain constant. In this respect, the Sodium Hydroxide system has an advantage over systems utilizing oxidizing agents. Provided that the agent is neutralized to bring the pH to an acceptable level, it can be expected that full scale operation will produce the same result.

The residual levels for the Sodium Hypochlorite system at bench-scale are only a fraction (roughly 1/50th) of those for commercial systems utilizing the same active substance. Similar levels have been exhibited by a prototype of the system currently installed on *Ranger III*. However the system is substantially similar to earlier designs attempted by a commercial manufacturer and which later incorporated a filter to reduce dosing and residual levels. It is unknown whether the low residual levels of the Sodium Hypochlorite system can be maintained without sacrifices in performance.

Table 15 – Toxicity Ranking

	Alfa Laval PureBallast	Hyde Guardian	Unitor BWTS	Hitachi ClearBallast	Siemens SiCURE	NaOH Dosing	NaOCl Dosing
Residual oxidant	none	none	<0.09 mg/L	not reported	<0.1 mg/L	(n/a)[1]	0.002 mg/L
Within VGP Cl limits	(n/a)	(n/a)	✓	not reported	✓	(n/a)	✓
Exceptions to state Cl limits	(n/a)	(n/a)	IL, IN, MN	not reported	IL, IN, MN	(n/a)	
Ranking	**1**	**1**	**5**	**not ranked**	**5**	**3**[2]	**4**[3]

1 – Byproducts of neutralization are sodium carbonate and bicarbonate. These are benign byproducts which do not have oxidizing properties.
2 – Rank is based on the assumption that neutralization achieves a pH less than 9 at full scale.
3 – Residual toxicity at full scale is unknown. Score is tentative based on bench scale.

National Park Service water quality experts will review future toxicity test results for the two prototype systems and may revise rankings at a later date.

7.1.3 Equipment Size and Weight

Footprint and weight receive a combined score. This score is assigned based on the product of square footage and weight. For instance, a system occupying 20 ft^2 and weighing 500 lbs has a composite value of 10,000 ft^2-lb. The analysis shows that the composite values may be categorized in the following groups: values less than 10,000, values between 10,000 and 40,000, and values greater than 40,000.

Table 16 – Footprint and Weight Ranking

	Alfa Laval PureBallast	Hyde Guardian	Unitor BWTS	Hitachi ClearBallast	Siemens SiCURE	NaOH Dosing	NaOCl Dosing
Footprint (sq ft)	28	25	26	not reported	[redacted]	53	4
Weight (lbs)	3,014	972	3,750	not reported	[redacted]	17,379	147
Ranking	**4**	**2**	**4**	**not ranked**	**2**	**6**	**1**

7.1.4 Electrical Load

Ranking is strictly assigned based on the electrical load needed to operate the system and any supporting auxiliaries that are additional to the vessel in its current configuration. The analysis shows that electrical loads may be categorized in the following groups: negligible loads, loads between 1 and 10 kW, loads between 10 and 20 kW, and loads greater than 20 kW.

Table 17 – Electrical Load Ranking

	Alfa Laval PureBallast	Hyde Guardian	Unitor BWTS	Hitachi ClearBallast	Siemens SiCURE	NaOH Dosing	NaOCl Dosing
Electrical Load	42 kW	17.2 kW	15 kW	not reported	[redacted]	5 kW	negligible
Ranking	**6**	**4**	**4**	**not ranked**	**2**	**2**	**1**

7.1.5 Lifecycle Costs

Ranking of lifecycle costs is based on a plot of the all costs accumulated over 25 years. Figure 9 illustrates the one-time capital costs (represented by the initial y-axis offset) and the cumulative operating and maintenance costs (represented by the upward sloping line) for each system. The analysis shows that lifecycle costs fall into the following groups: lifecycle costs less than $200,000, between $200,000 and $400,000, costs between $400,000 and $600,000, and lifecycle costs greater than $600,000.

Table 18 – Lifecycle Cost Ranking

	Alfa Laval PureBallast	Hyde Guardian	Unitor BWTS	Hitachi ClearBallast	Siemens SiCURE	NaOH Dosing	NaOCl Dosing
Capital Costs	$465,000	$304,000	$790,000	not reported	$385,000	$392,000	$92,000
Annual O&M Costs	$3,057	$3,638	$4,255	not reported	$4,334	$5,229	$2,303
Ranking	**3**	**2**	**6**	**not ranked**	**3[1]**	**3**	**1[1]**

1 - Denotes systems where corrosion due to chemical agents may increase lifecycle costs

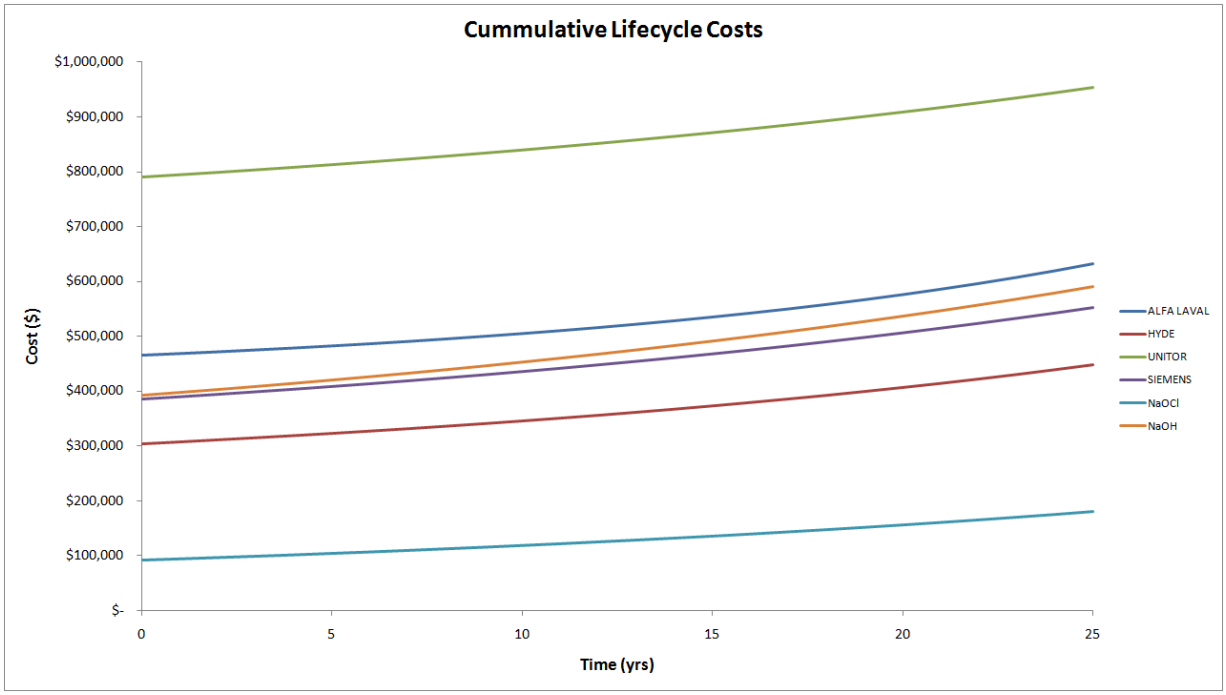

Figure 9 - Comparison of System Lifecycle Costs

7.1.6 Safety

Safety is ranked based on the use of active substances, whether handling of such substances is required, and the risk of environmental pollution or injury.

Table 19 – Safety Ranking

	Alfa Laval PureBallast	Hyde Guardian	Unitor BWTS	Hitachi ClearBallast	Siemens SiCURE	NaOH Dosing	NaOCl Dosing
Active Substances	✓		✓	✓	✓	✓	✓
Handling of Substances				✓	✓	✓	✓
Risk of Injury or Pollution	low	low	low	unknown	low	moderate to high	low
Ranking	**2**	**1**	**2**	**not ranked**	**4**	**6**	**4**

Section 8 Conclusions

U.S. vessels operating in Great Lakes service are faced with approaching regulations with which technology is still catching up. The IMO Convention, although not yet ratified, is the most fully developed standard available. The Convention identifies not only what performance is required but also provides the road map (in the form of testing guidelines) for demonstrating performance. As a result, there is already an array of commercially available technologies fully compliant with the Convention. However, IMO compliance does not guarantee compatibility with all forms of vessel service. As was revealed during the course of this study, a system may pass IMO's testing regimen and gain type approval only to be subsequently removed from service.

In the case of national and state regulations, the performance standards have been identified but the road maps are still being developed. As such, there are currently no technologies that clearly demonstrate compliance with the more stringent standards. A vessel owner considering treatment system installation is therefore left to choose from a field that has only demonstrated compliance with the IMO Convention. The selection may be further limited by financial considerations which deter companies from entering a particular market.

Evaluation of the seven candidate technologies revealed both major and minor factors which influenced their respective compatibilities with the platform vessel. It was discovered that commercial barriers immediately rule out installation of the Alfa-Laval and Hitachi systems. The Sodium Hydroxide system, while not ruled out completely, has significant risk due to physical constraints of small vessels (weight and stability) and uncertainties in how the regulatory agencies will interpret the bulk carriage of chemical agents.

The technologies that are not ruled out may be broadly categorized into two groups: those having IMO type approval (Hyde, Unitor) and those which do not (Siemens, Sodium Hypochlorite). Selection from the former group represents less technical risk since these technologies have completed the full battery of evaluation required by IMO. Selection of the latter requires a willingness to await further evaluation. The Siemens system is projected to have type approval in 2011 and therefore is a reasonably safe option within the latter category.

The relative merits of the treatment technologies are summarized below:

- *Alfa Laval PureBallast* – The technology shows promise in fresh water but is ineligible for consideration due to removal from the fresh water (Great Lakes) market.
- *Hyde Guardian* – The system is IMO type approved. The treatment process is compatible with fresh water and requires no minimum residence time after treatment. The size and weight characteristics are among the best of the commercially marketed technologies evaluated. The electrical load is moderate but still manageable for a small vessel. The lifecycle costs are relatively low due primarily to the relatively inexpensive purchase price of the treatment device and the minimal need for vessel system modifications. The system has minimal safety risks.
- *Unitor BWTS* – The system is IMO type approved and the manufacturer indicates that efficacy can be achieve in fresh water with no minimum hold time. The size, weight, and electrical characteristics are moderate but still feasible for a small vessel to

accommodate. The lifecycle costs are the most expensive due to the required modifications driven by the minimum ballast flow rate of 440 GPM (100 m^3/hr). Drydocking and extensive piping system rip-outs would be required. The system has minimal safety risks.

- *Hitachi ClearBallast* – The technology shows promise in fresh water but must ruled out due to its removal from the market.
- *Siemens SiCURE* – The system has undergone IMO testing in fresh water but has not completed the full testing regimen necessary to obtain IMO type approval. Efficacy at durations less than 24 hours is unknown. The size, weight, and electrical characteristics are among the best of the commercially marketed technologies evaluated. The lifecycle costs are moderate although corrosion issues may ultimately lead to costs much greater than those estimated. There are minor safety concerns attributed to the handling of bleach and sodium sulfite solutions, but these can be managed with the proper use of PPE and safe handling of portable containers.
- *Sodium Hydroxide Dosing* – The only published test results available at this time are for bench scale testing in fresh water. Performance relative to IMO D-2 requirements and with short duration hold times is unknown. Lifecycle costs are moderate. The electrical load is low, but the size and weight are significant due to the large tanks required. Uncertainties with respect to impact on vessel stability and regulatory interpretation of bulk chemical storage regulations may make the system impractical for small vessel use.
- *Sodium Hypochlorite Dosing* – The system has only undergone bench scale testing in fresh water. Performance relative to IMO D-2 requirements and with short duration hold times is unknown. The electrical load, size, and weight are negligible. The lifecycle costs are the lowest of all systems evaluated due largely to the low initial cost of installation, although corrosion issues may ultimately lead to costs much higher than those estimated. There are minor safety concerns attributed to the handling of bleach and sodium sulfite solutions, but these are manageable with the proper use of PPE and safe handling of portable containers.

Appendix A Capital Cost Estimates

REDACTED

Appendix B Operating and Maintenance Cost Estimate

REDACTED

Appendix C Assumed Generator Fuel Consumption Characteristics

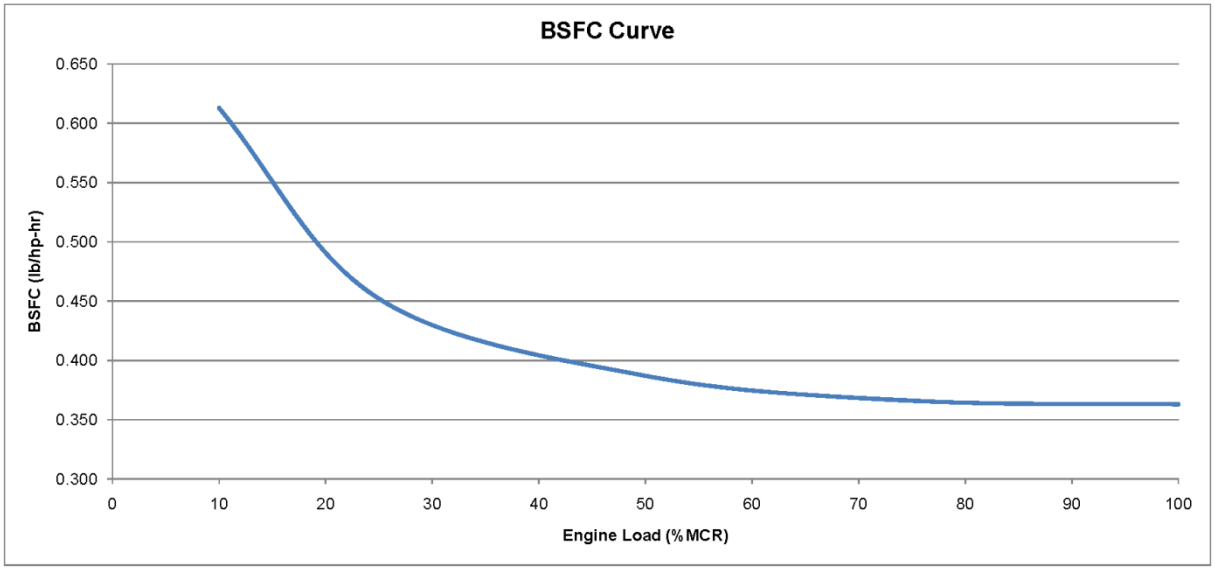
BSFC Curve
BSFC (lb/hp-hr)
0.650
0.600
0.550
0.500
0.450
0.400
0.350
0.300
0
10
20
30
40
50
60
70
80
90
100
Engine Load (% MCR)