APPENDIX 1

CONSTRUCTION SPECIFICATIONS FOR TRAIL STRUCTURES

Appendix 1 provides sample specifications for a number of trail structures. It demonstrates one or more technically correct ways to construct a structure but it is not intended to restrict local creativity. The intent is to provide a suggested method when local plans are not available.

Trail Stairways

Riser - Tread Relationship

Riser	Tread
4"	19"
5"	15"
6"	12 1/2"
7"	10 3/4"

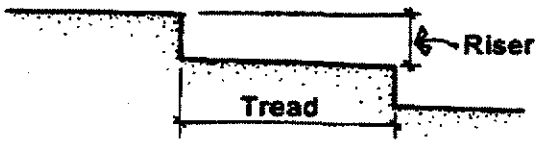

Rock Riser Stairway

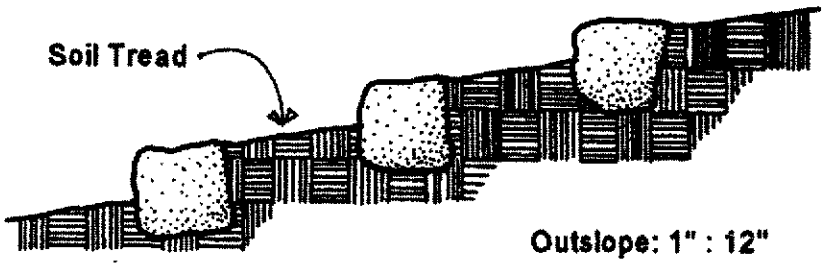

Log Riser Stairway

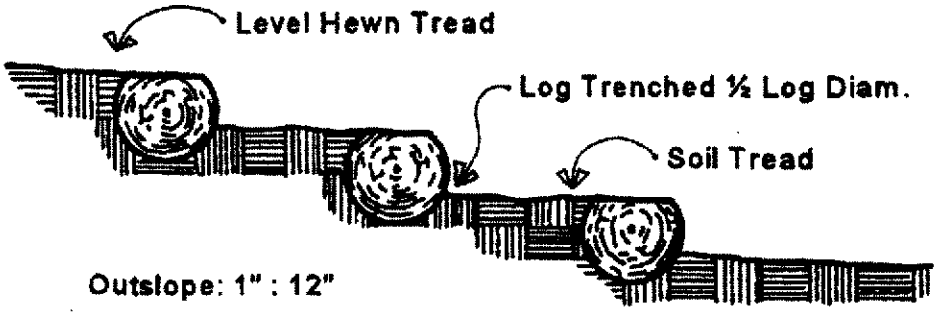

Overlapping Rock Stairway

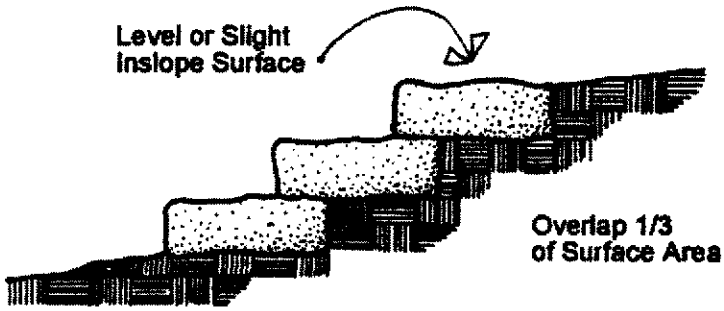

Plank Style Retaining Stairway

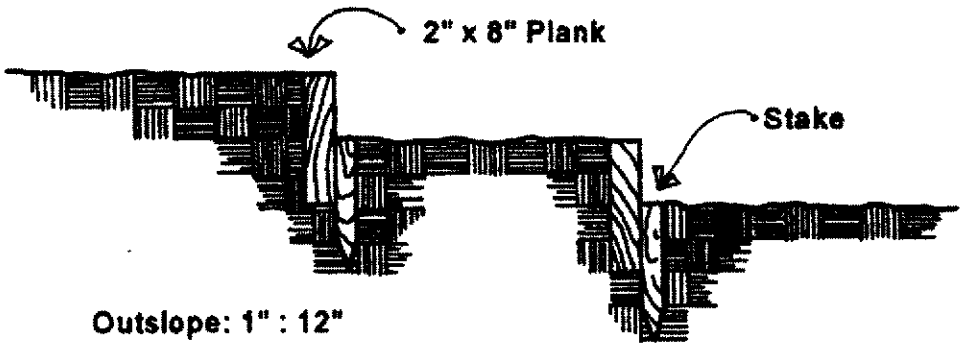

Crib-Ladder Stairway

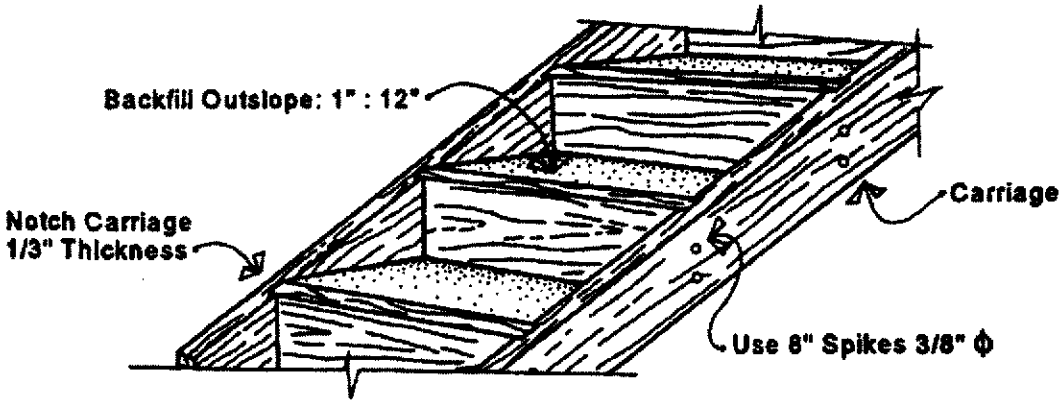

Retaining Wall Section

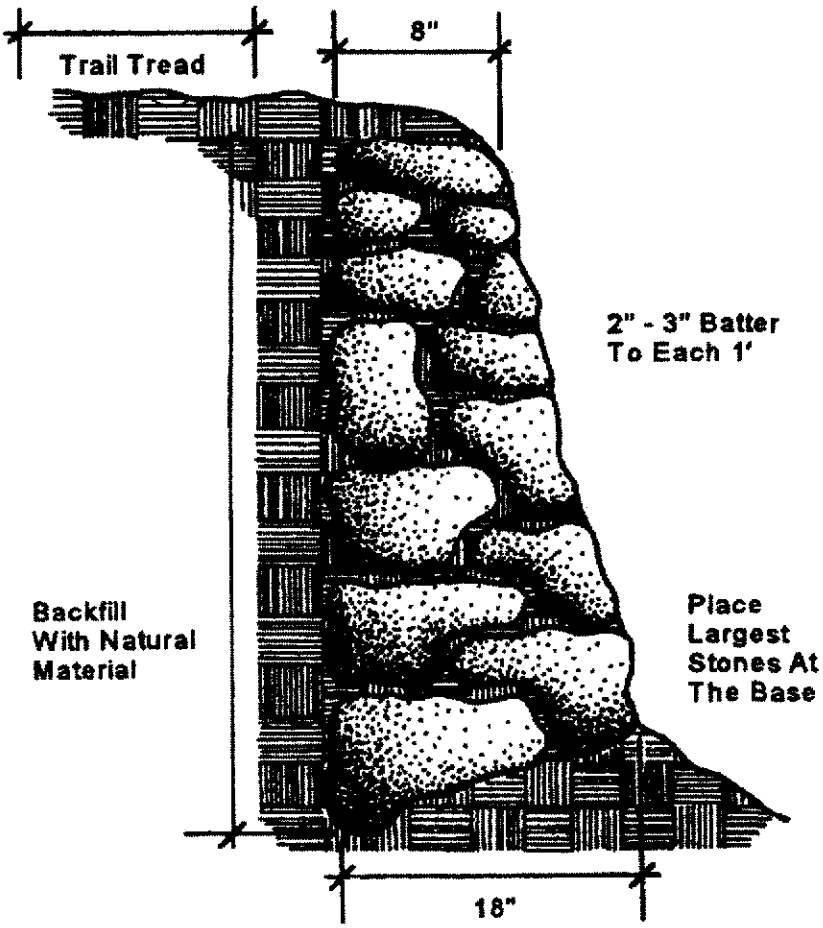

Turnpike

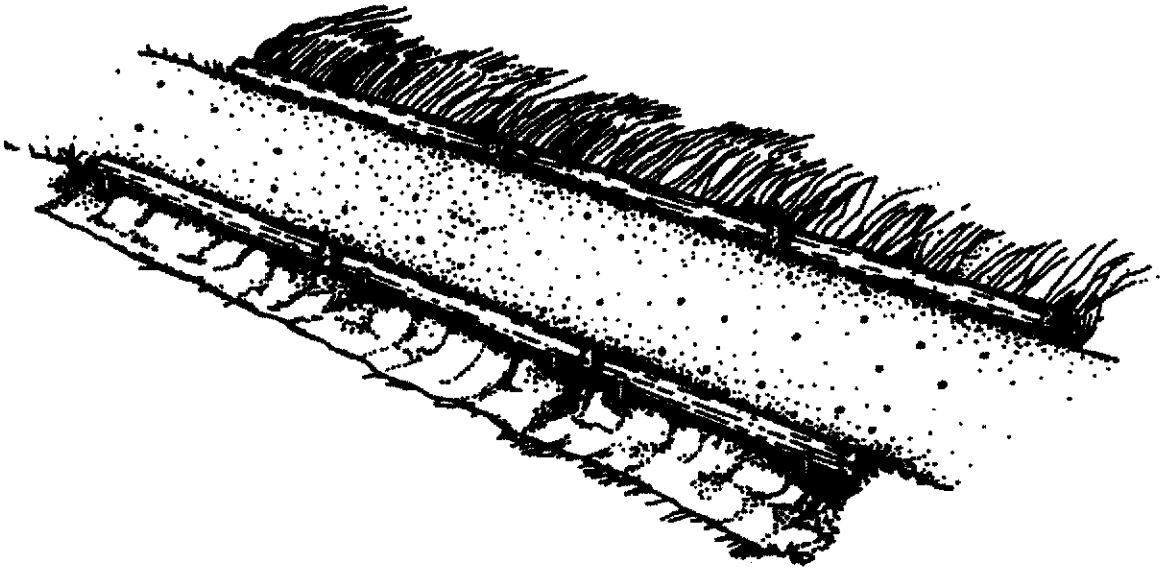

Turnpike Section

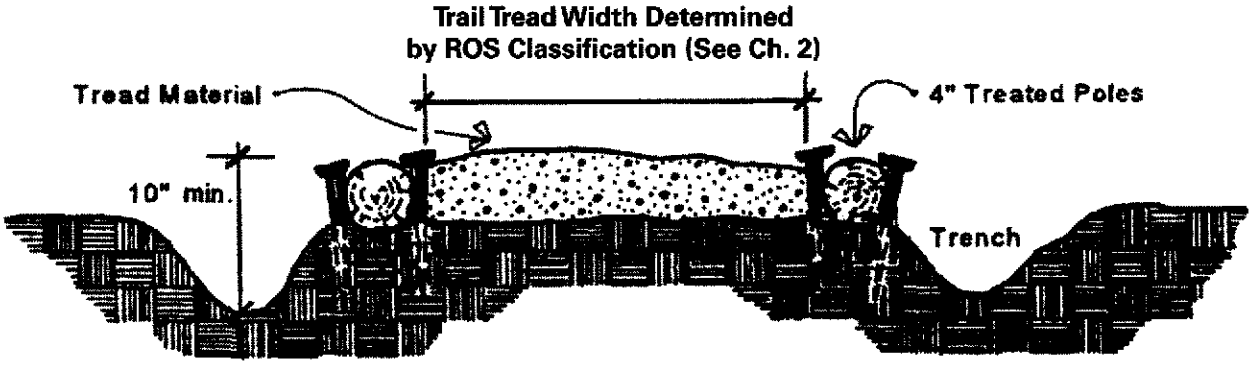

Coweeta Dip Plan View

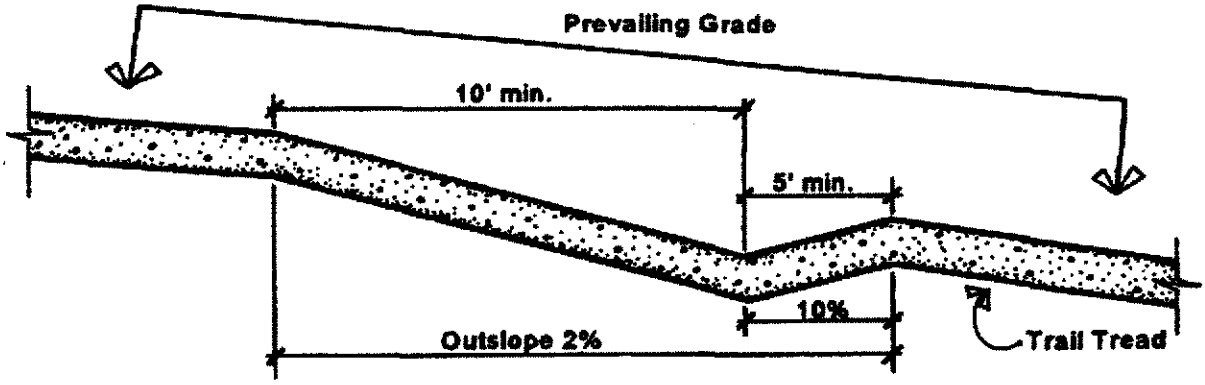

Wayside Exhibit Format

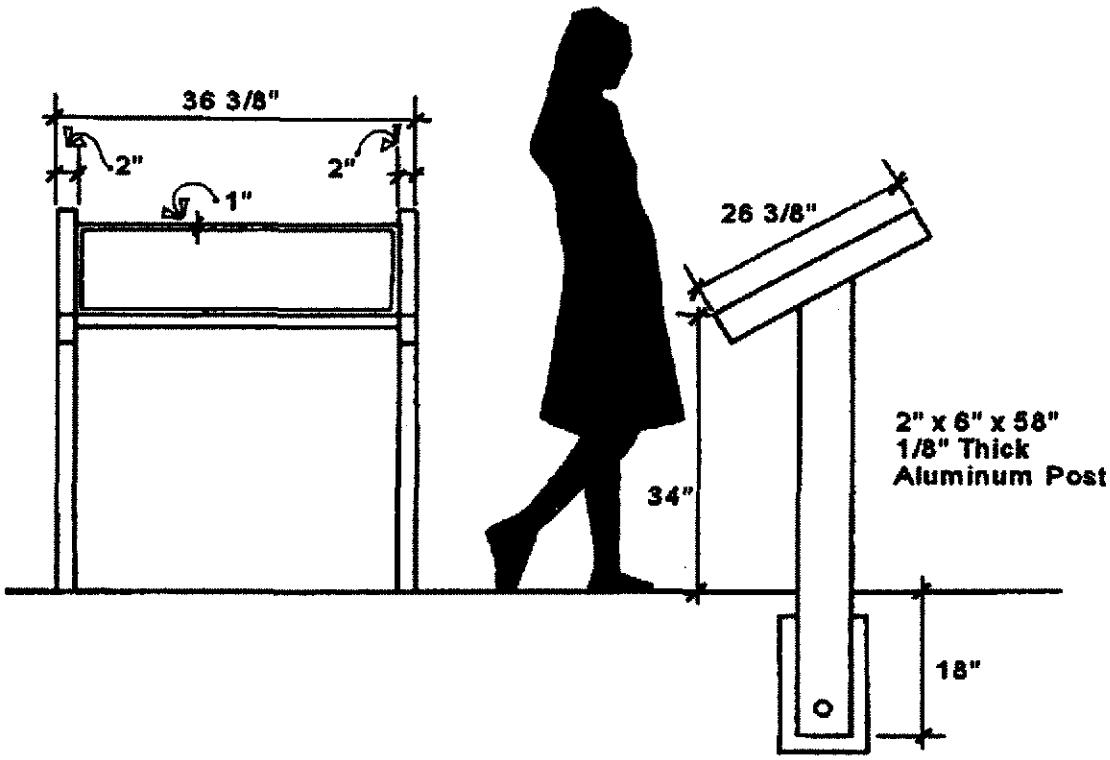

A Suggested 3-Panel Display Arrangement

Adapted from *Standards for Forest Service Signs and Posters*

1) Recreation activity information
1a) Recreation activity information map
2) Visitor registration
3) Environmental awareness
4) User etiquette
5) Supervisor's directives
6) Safety/emergency information
7) Local interest: weather, community activities, etc.

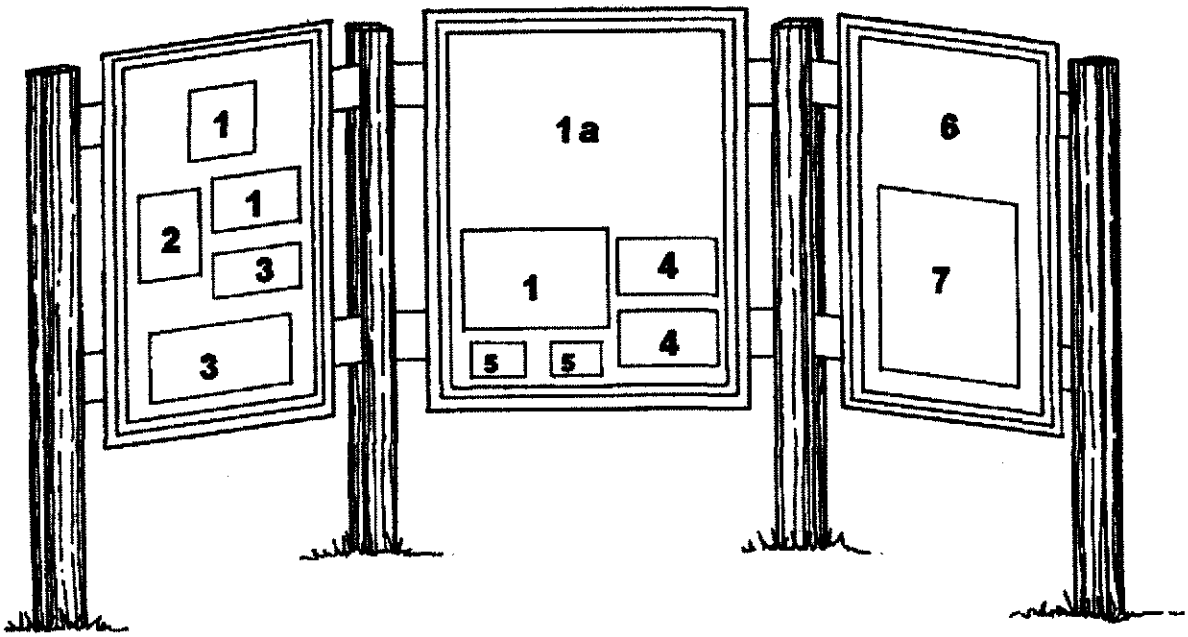

Trail Information Sign/Kiosk Option

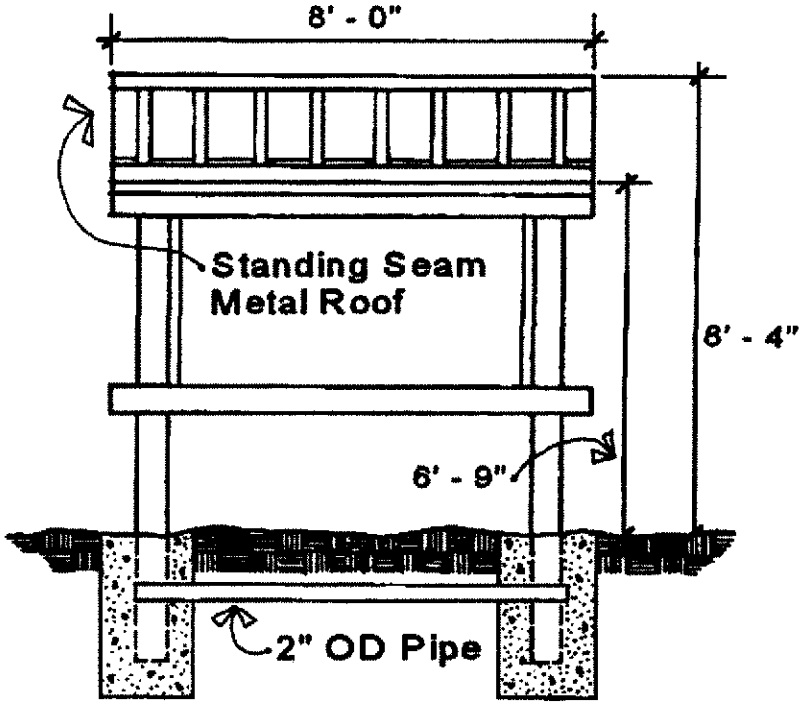

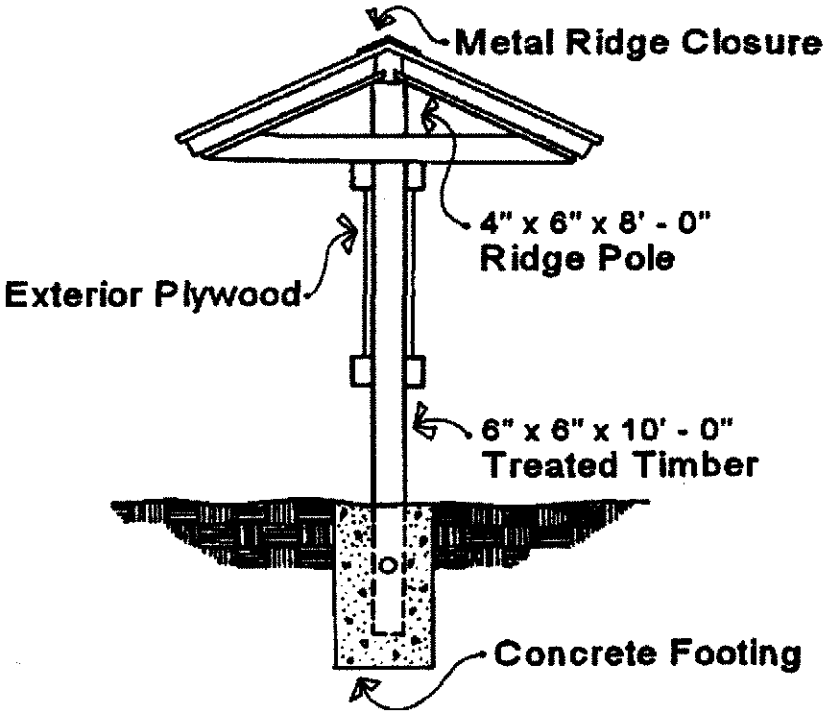

TYPICAL BOARDWALK DETAILS
WAUKESHA / MILWAUKEE COUNTY CHAPTER
ICE AGE PARK & TRAIL FOUNDATION

02/28/01

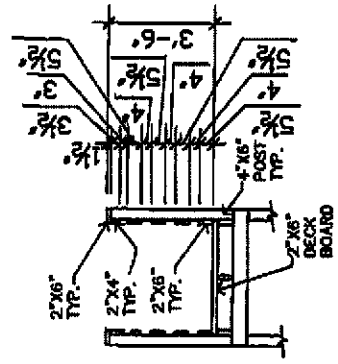

END VIEW

NOTE: THESE DRAWINGS ARE TO BE USED FOR REFERENCE PURPOSES ONLY AND ARE NOT INTENDED TO BE USED AS AN ENGINEERED DRAWING

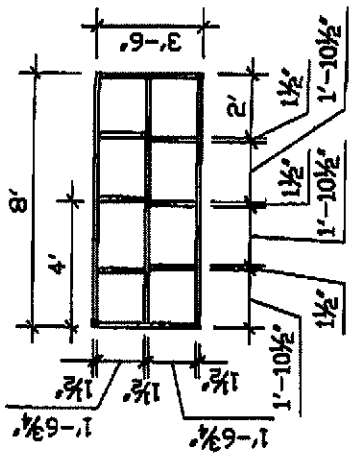

PLAN VIEW

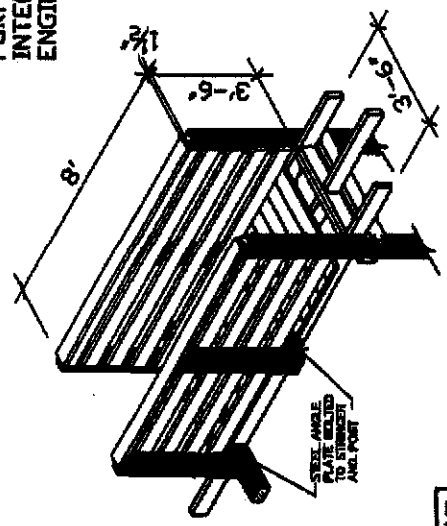

WITH RAILING

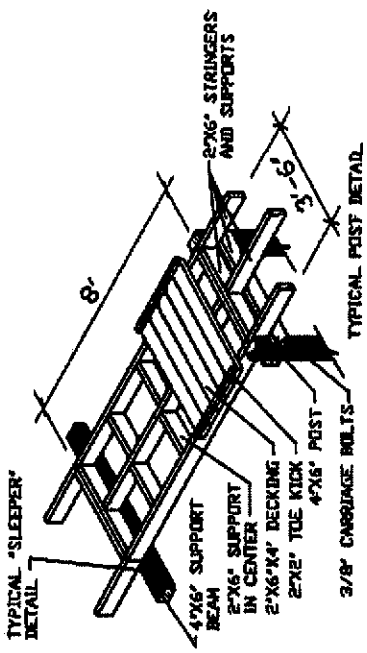

WITHOUT RAILING

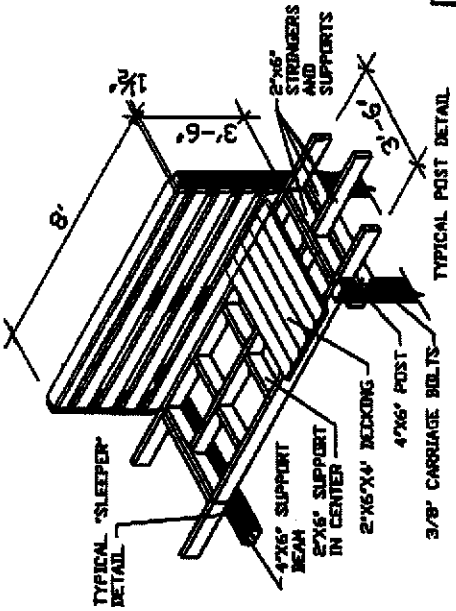

SPECIFICATIONS FOR BRIDGES USING W (WIDE FLANGE) I BEAMS FOR THE SUPPORT STRUCTURE.

KEY 8 W 10

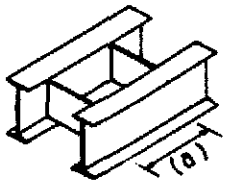

The first number (8) indicates the depth of the beam (8" in the example), the second number (10) indicates the weight in pounds per lineal foot of beam (10 lbs. In the example).

The number in parentheses (a) is the maximum spacing in feet between lateral supports.

12 FOOT WIDE BRIDGES

		NUMBER	OF	BEAMS	
LENGTH	6	5	4	3	2
20'	6 W 20 (6.4)	6 W 25 (6.4)	10 W 15 (4.2)	10 W 19 (4.2)	12 W 19 (4.2)
25'	8 W 21 (5.6)	12 W 14 (3.5)	12 W 19 (4.2)	14 W 22 (5.3)	14 W 26 (5.3)
30'	10 W 22 (6.1)	12 W 22 (4.3)	14 W 22 (5.3)	14 W 26 (5.3)	16 W 31 (5.8)
35'	14 W 22 (5.3)	12 W 26 (6.9)	14 W 30 (7.1)	14 W 34 (7.1)	18 W 35 (6.3)
40'	14 W 26 (5.3)	14 W 30 (6.0)	14 W 38 (7.1)	14 W 48 (7.2)	18 W 46 (6.4)
45'	14 W 34 (7.1)	14 W 38 (7.1)	14 W 48 (7.2)	14 W 61 (10.6)	18 W 60 (8.0)
50'	14 W 43 (8.4)	16 W 40 (7.4)	14 W 61 (10.6)	14 W 82 (10.7)	16 W 89 (10.9)

10 FOOT WIDE BRIDGES

	NUMBER	OF	BEAMS	
LENGTH	5	4	3	2
20'	8 W 10 (4.2)	10 W 11.5 (3.8)	12 W 11.8 (2.7)	12 W 16.5 (4.1)
25'	10 W 11.5 (3.8)	12 W 14 (3.5)	12 W 16.5 (4.1)	12 W 22 (4.3)
30'	12 W 14 (3.5)	12 W 16.5 (4.1)	12 W 19 (4.2)	14 W 26 (5.3)
35'	12 W 16.5 (4.1)	12 W 19 (4.2)	14 W 22 (5.3)	14 W 30 (7.1)
40'	12 W 19 (4.2)	12 W 22 (4.3)	14 W 26 (5.3)	18 W 35 (6.3)
45'	12 W 22 (4.3)	14 W 26 (5.3)	14 W 30 (7.1)	16 W 40 (7.4)
50'	14 W 22 (5.3)	16 W 26 (5.6)	14 W 34 (7.1)	18 W 40 (6.4)

8 FOOT WIDE BRIDGES

	NUMBER	OF	BEAMS
LENGTH	4	3	2
20'	8 W 10 (4.2)	10 W 11.5 (3.8)	12 W 14 (3.5)
25'	10 W 11.5 (3.8)	12 W 14 (3.5)	12 W 19 (4.2)
30'	12 W 14 (3.5)	12 W 16.5 (4.1)	12 W 22 (4.3)
35'	12 W 16.5 (4.1)	12 W 19 (4.2)	14 W 26 (5.3)
40'	12 W 19 (4.2)	14 W 22 (5.3)	14 W 30 (7.1)
45'	12 W 22 (4.3)	14 W 26 (5.3)	14 W 34 (7.1)
50'	14 W 22 (5.3)	16 W 26 (5.6)	18 W 35 (6.3)

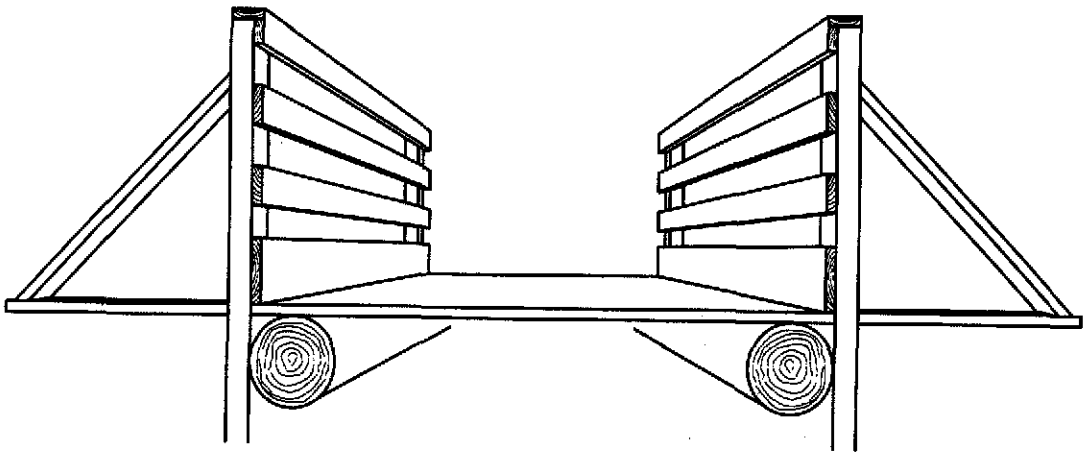

1 SNOWMOBILE BRIDGE PERSPECTIVE

SCALE 1/2" = 1'

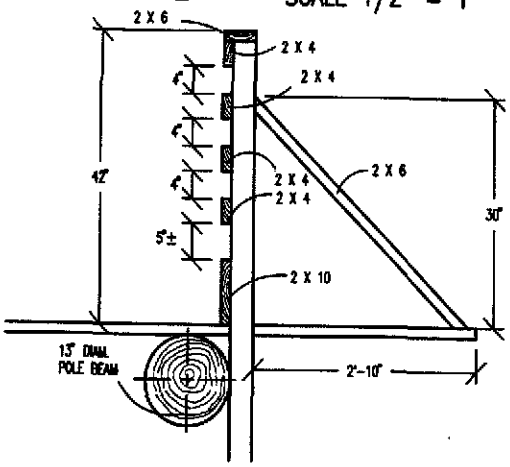

2 RAILING DETAIL w/ 2 X 4 RUNNERS

SCALE 1/2" = 1'

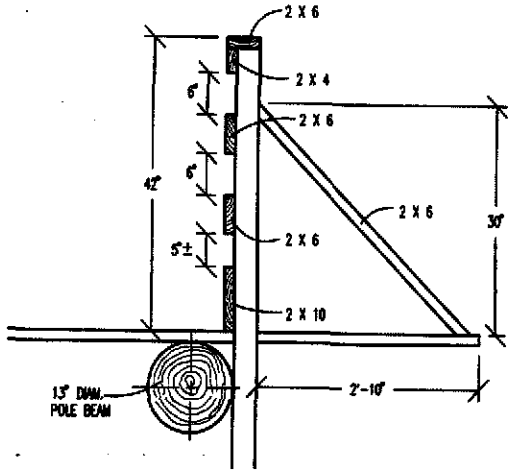

3 RAILING DETAIL w/ 2 X 6 RUNNERS

SCALE 1/2" = 1'

A

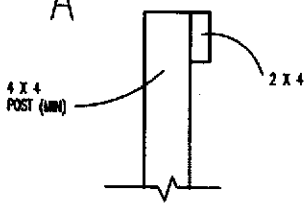

4 TOP RAILING DETAIL SUPPORT 2'-6" O.C.

SCALE 1" = 1'

B

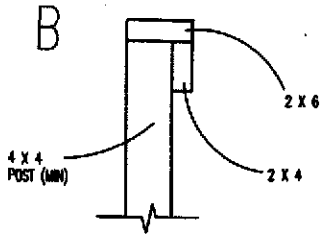

5 TOP RAILING DETAIL SUPPORT 8'-0" O.C.

SCALE 1" = 1'

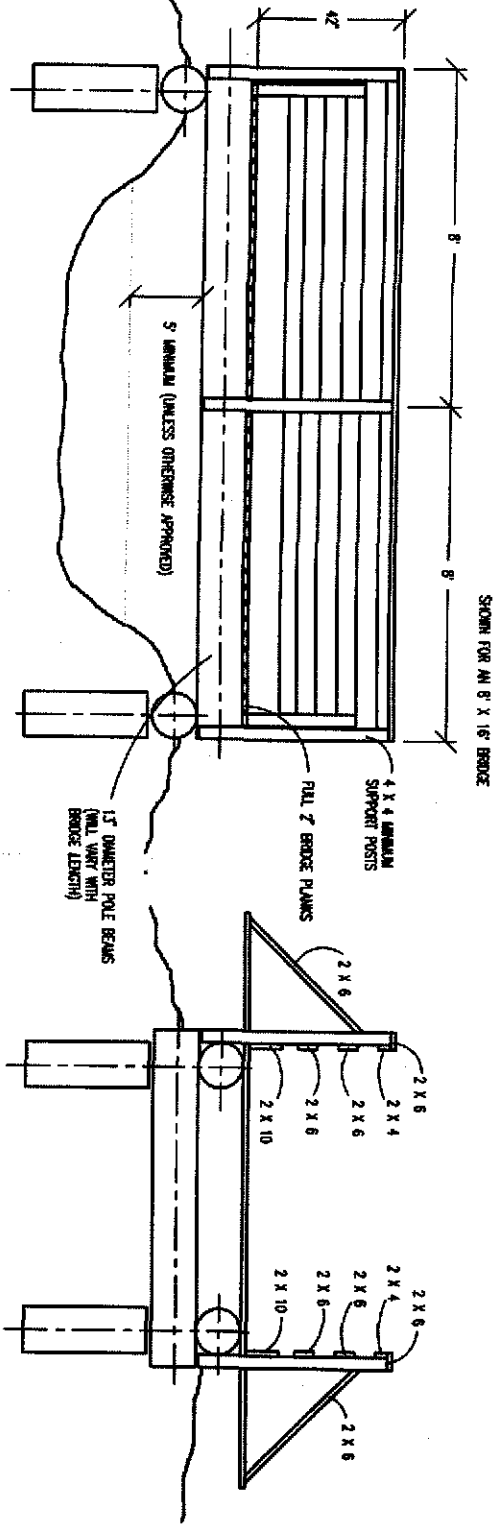

6 RAILING SIDE ELEVATION
SCALE 1/4" = 1'

7 RAILING FRONT ELEVATION
SCALE 1/4" = 1'

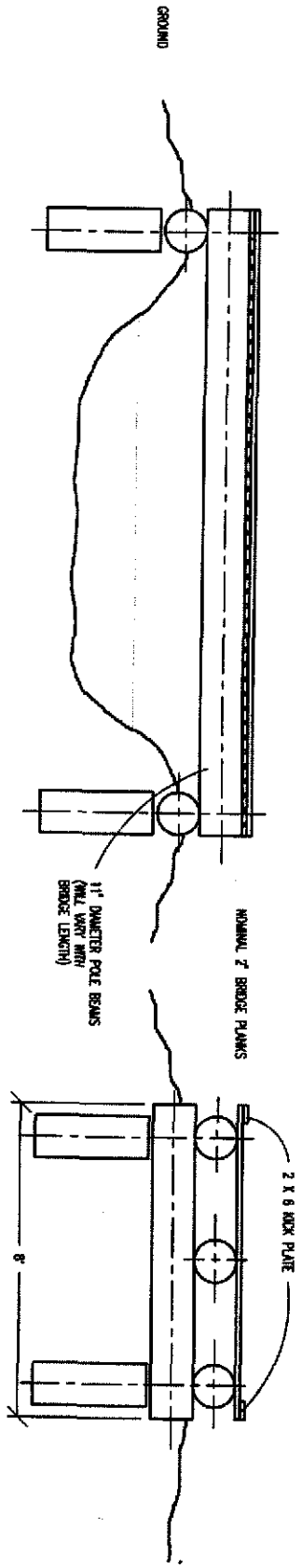

8 3 SUPPORT POLES & KICK PLATES SIDE VIEW
SCALE 1/4" = 1'

9 FRONT ELEVATION
SCALE 1/4" = 1'

List of Prefabricated Bridge Manufacturers

- Anderson Enterprises
  Route 2, Box 159AA
  Eau Claire, WI 54703
  (715) 874-6543
  [Prefabricated steel bridges with wood decks (Installation available).]

  Sales Representative:
  Bud Flood
  1832 Illinois Avenue
  Stevens Point, WI 54481
  (715) 344-8243

- Wheeler Consolidated
  Box 26100
  St. Louis Park, MN 55426
  (612) 929-7854
  [Precut wood bridges for on-site assembly]

  Sales Representative:
  Bud Flood
  1832 Illinois Avenue
  Stevens Point, WI 54481
  (715) 344-8243

- Continental Bridges, Inc.
  Route 5, Box 178
  Alexandria, MN 56308
  (800) 328-2047
  [Prefabricated steel bridges with wood decks.]

- Custom Manufacturing
  606 Delco Drive
  Clinton, WI 53525
  (608) 676-2283
  [Kits of bridges include pre-drilled steel I-beams and cross members, wood deck planks, pre-drilled wood posts and wood railings (Installation available).]

- Sentinel Structures
  477 South Teck Avenue
  Peshtigo, WI 54157
  (715) 582-4544
  [Precut wood bridges for on-site assembly - laminated wood beams also available.]

Bridge Contractors

- Flannery Trucking
  606 South Grandview
  Crandon, WI 54520
  (715) 478-2415

[Constructs abutments and crane service to install bridges]

- Horizon Construction
  4100 Campbellsport Drive
  P.O. 439
  Campbellsport, WI 53010
  (414) 533-8490

[Constructs abutments, installs prefabricated metal bridges and does site grading]

- Krueger and Stienfest
  P.O. Box 159
  Antigo, WI 54409
  (715) 627-7020

[Installs pilings and bridges]

- Ruzic Construction
  W 4897 Highway 73
  Neillsville, WI 54456
  (715) 743-4138

[Builds and installs metal, timber and concrete bridges. Pile driving available]

- Smith Construction
  Route 1
  Wabeno, WI 54566
  (715) 473-5324

[Wood truss bridge assembly]

- Bean's Inc.
  Route 1, Box 181
  Chaseburg, WI 54621
  (608) 452-3169

[Have installed Wheeler bridges]

- Fenner Excavating and Trucking
  Cty J and 10th Avenue
  Friendship, WI 53934
  (608) 339-9072

[Have installed Wheeler bridges]

- Great Lakes Marine Contracting
  N256 Hwy. 49
  Weyauwega, WI 54983
  (414) 867-3455

[Have installed Wheeler bridges]

- Lakeland Landscaping
  7828 Parkside Court
  Minocqua, WI 54548
  (715) 284-9491

[Have installed Wheeler bridges]

- Lunda Construction Company
  Box 669
  Black River Falls, WI 54616
  (715) 284-9491

[Have installed Wheeler bridges]

- *McMullen & Pitz Construction Co.*
  17 Maritime Drive
  P.O. Box 8
  Manitowoc, WI 54221
  (414) 682-0131

[Have installed Wheeler bridges]

Bridge Material Sources that Offer Special Values

Isaksson Lumber Co., Inc. - (HCR Box 15, Herbster, WI (715) 774-3381) saws pine lumber and has rough sawed and smooth finished pressure treated lumber from stock or to special order.

Fastenal - good source for bridge hardware

National Steel Fabricators - (W 16890 U.S. Highway 8, Rice Lake , WI 54868) can provide bridge engineering service, drawings and steel fabrication.

Sentinel Structures (477 South Tech Avenue, Peshtigo, WI 54157, (715) 582-4544) sells laminated wood beams for bridges up to 100 feet long.

Typical 20 or 10 car parking lot

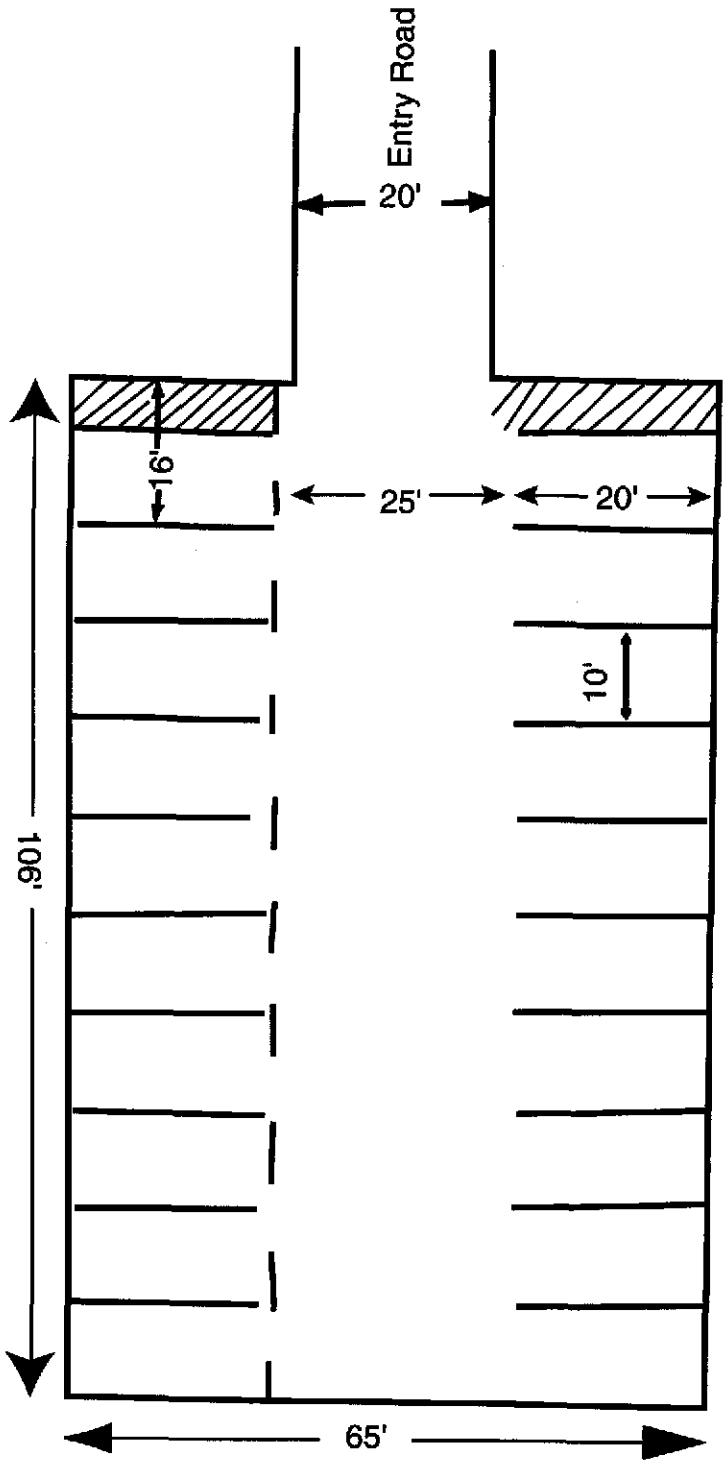

20 car lot would be *106' x 65'*; 10 car lot would be *106' x 45'*. Surface could be either asphalt or gravel. Scale: *1" =20'*

Typical 1-10 car parking lot

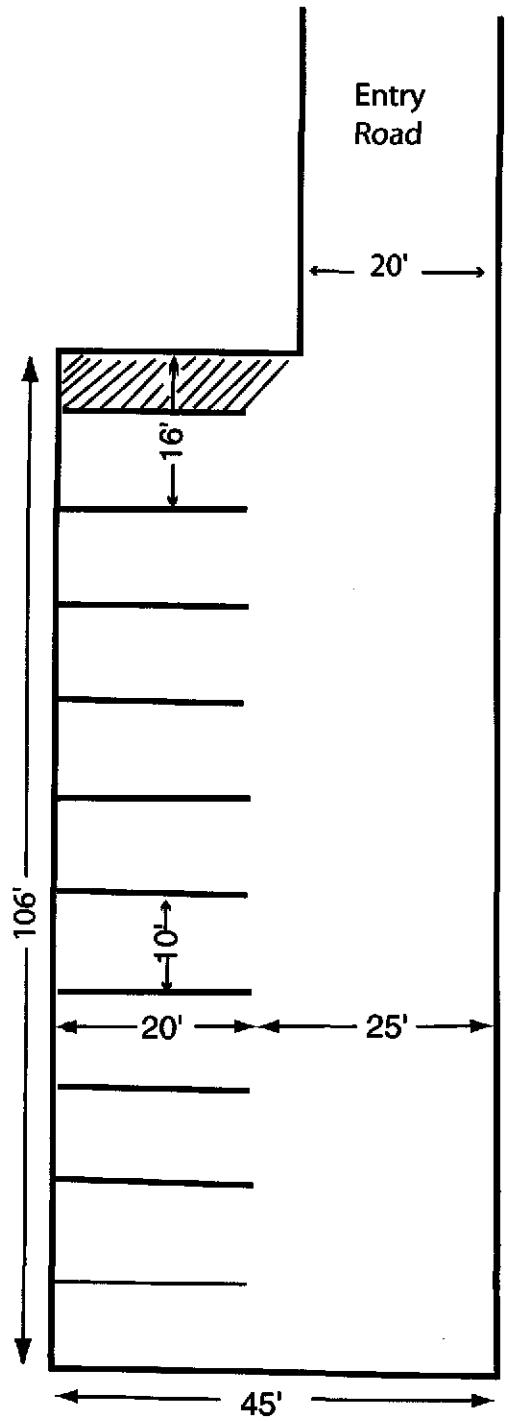

Typical parking lot of 1-10 spaces including one disabled accessible. Surface could be either asphalt or gravel. Scale: *1"=20'*
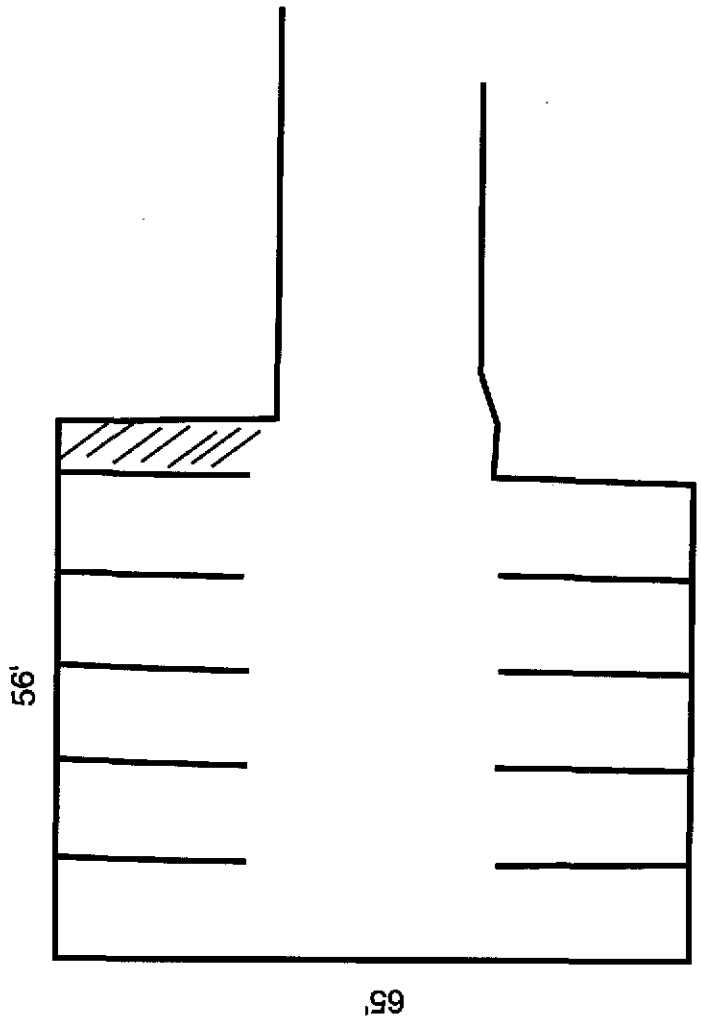
Alternate 10 car parking lot