REPORT OF COMPLETED WORKS — SEACOAST FORTIFICATIONS.
(Gun and Mortar Batteries)

COAST DEFENSES OF Sandy Hook
FORT Hancock, N.J.
BATTERY Urmston, (4 empls. dismantled)

Form 1. Corrected to July 1, 1921.

No. of guns 2 Caliber 3" Carriage Ped.

Battery commenced	1899 & 1900	Sources of electric current	C.P.P.Bloomfield #1;25 K.W., Alexander 25 K.W.sets
Battery completed	1903 & 1904		
Date of transfer Emp.1,2,5&6	Feb.27,1903	Max. kw. required for lights	2 K.W.
" " 3 & 4	June 7,1904	Max. kw. required for motors	
Material of construction	concrete		
Portland or Rosendale cement	Portland		
Cost to date of transfer	$13,400.00 Emp.1,2,5&6.		
	$12,000.00 " 3&4		
Connected to water supply	Yes	Present condition battery	Good
Connected to sewer		Rooms wet or dry	Fairly dry
Type of latrine			
Type of data transmission	Telephone	How ventilated	Through doorways
Trunnion elevation in battery	Emp.#3; 25.0 " #4; 25.0	Remarks:-	
Datum plane	M.L.W.		

ARMAMENT

Emplacement or Motor No.	Guns or Motors: Cal.	Length	Model	Serial No.	Mfgr.	Mounted	Carriages: Type	Model	Ser.No.	Manufacturer	Motor
1	Dismantled										
2	do.										
3	3"		1903	#75	Watervliet Ars.	Yes	Ped.	1903	59	Watertown Ars.	No
4	3"		1903	#76	do.	Yes	"	1903	60	do.	No
5	Dismantled										
6	do.										
7											
8											

HOISTS

Emplacement Number	Type	Delivery	Motor: Ser.No.	Makes	H.P.	Volts	RPM	Type of control	Date of Transfer	Remodeled for long points.
1										
2										

Note: Guns and Carriages in Emps. 1,2,5,&6 have been dismantled.

See 660.2-18, 10th Ind., stating that two 3" (15-pdr.) guns, M 1903 be retained as recommended in paragraph 1 a of 1st Ind., which also states that classification be

To be relocated near Brig. Gunnison. 662.8 (New York) MR 9631

REPORT OF COMPLETED WORKS - SEACOAST FORTIFICATIONS

Corrected to July 1, 1921.

COAST DEFENSES OF SANDY HOOK.
FORT HANCOCK.
BATTERY THOMAS URMSTON.
No. of Guns 2 Caliber 3" Carriage 4-B.P. 2-P.
Scale 1"=30'

NOTE: Carriages in Emp's. 1, 2, 5 and 6 have been dismantled.

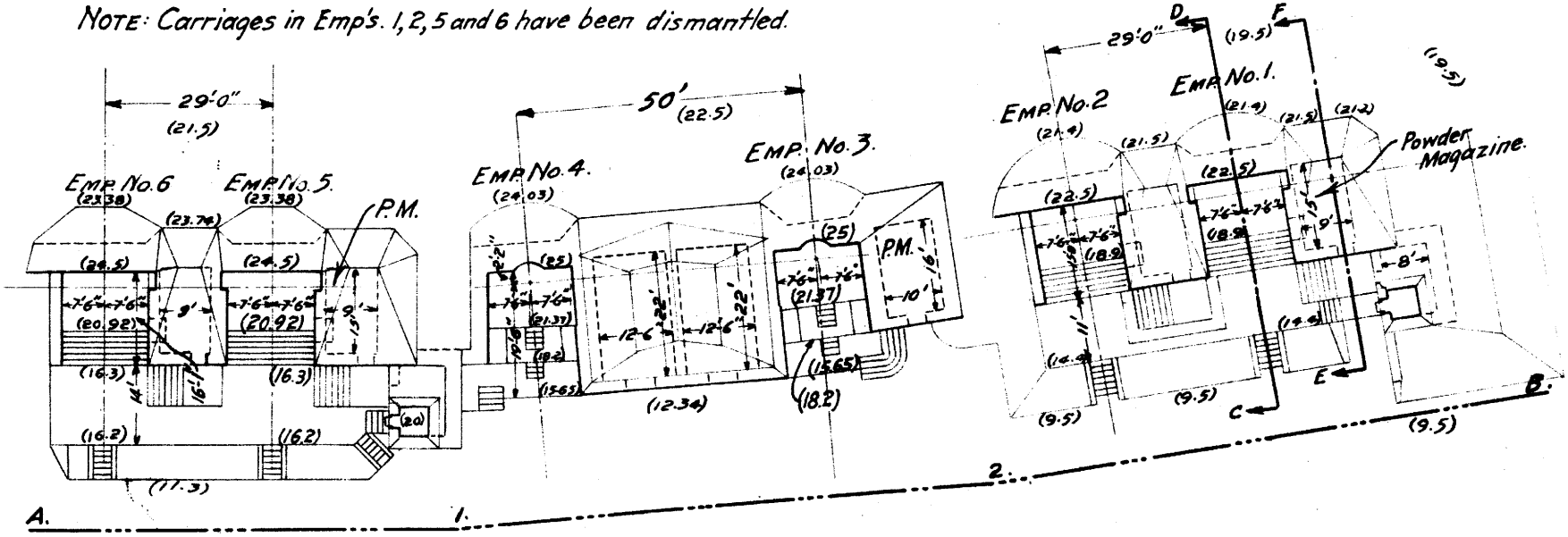

PLAN.

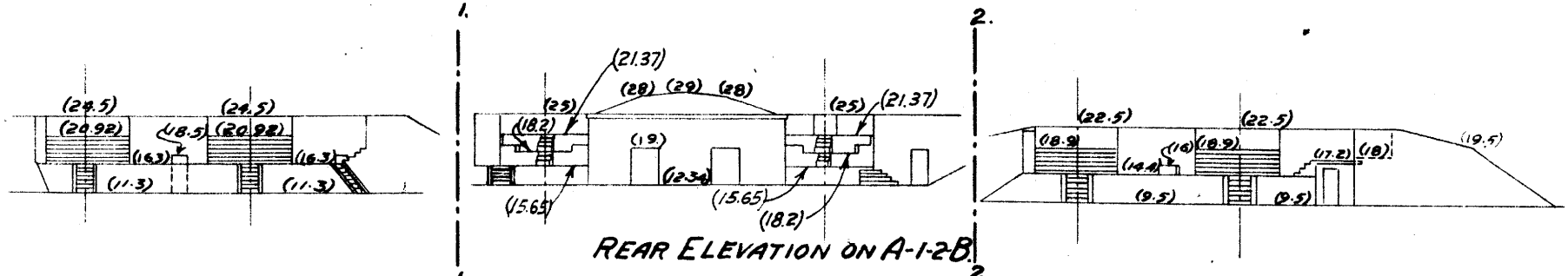

REAR ELEVATION ON A-1-2-B.

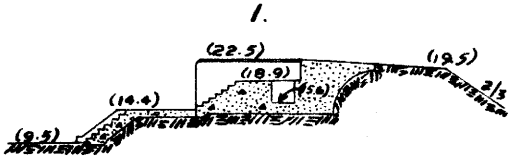

SECTION C-D

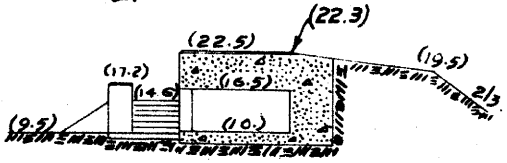

SECTION E-F

REPORT OF COMPLETED WORKS - SEACOAST FORTIFICATIONS

Corrected to July 1, 1921.

COAST DEFENSES OF SANDY HOOK.
FORT HANCOCK.
BATTERY THOMAS URMSTON.
No. of Guns 2 Caliber 3" Carriage 4-B.P. 2-P.
Scale 1"=30'

NOTE: Carriages in Emp's. 1, 2, 5 and 6 have been dismantled.

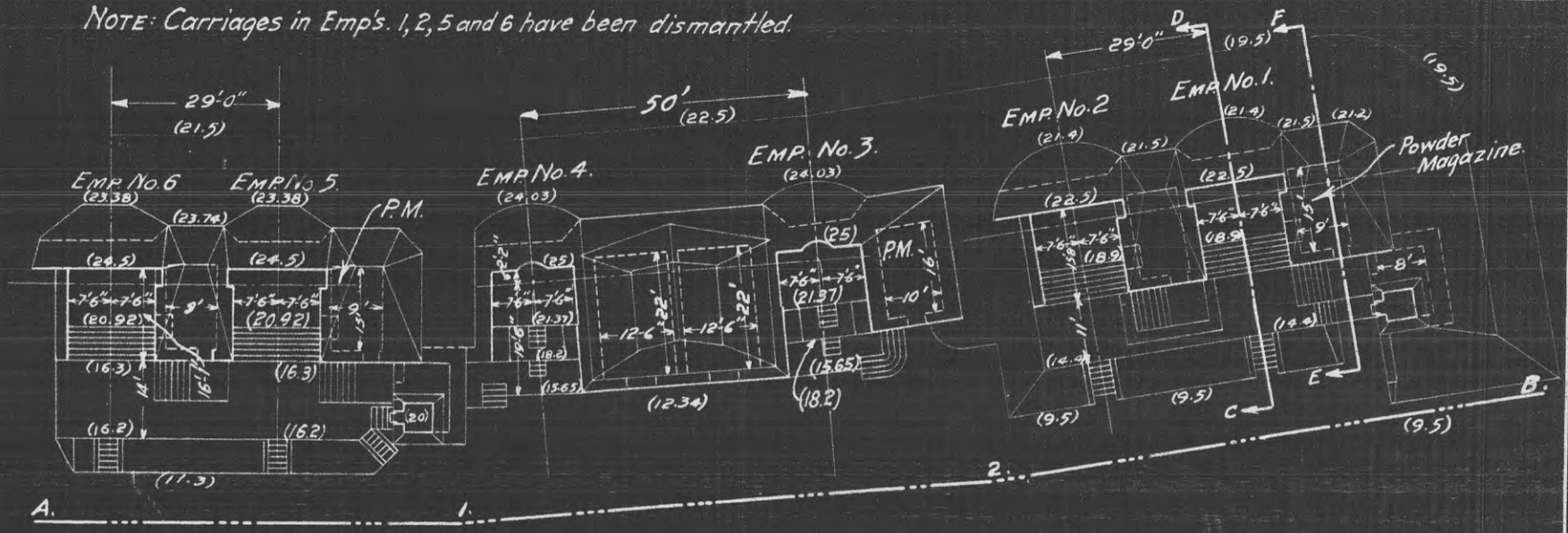

PLAN.

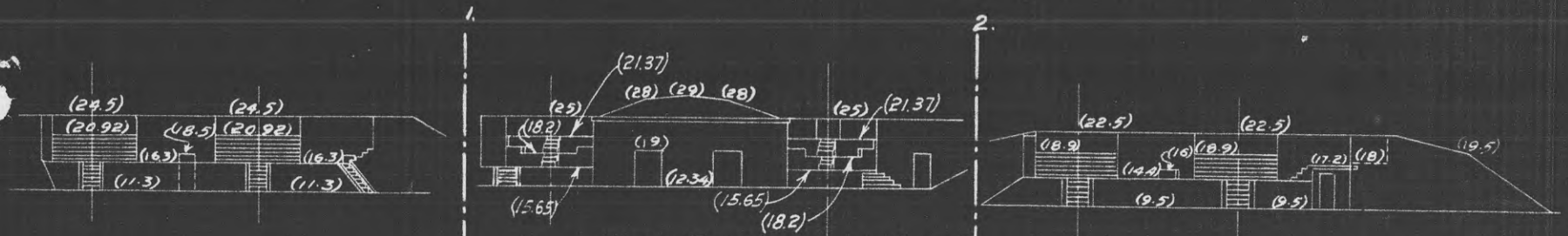

REAR ELEVATION ON A-1-2-B

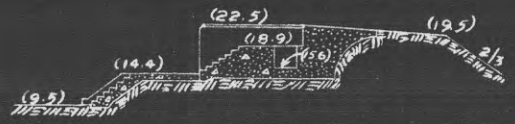

SECTION C-D

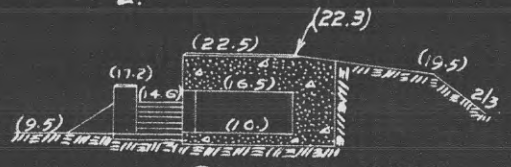

SECTION E-F

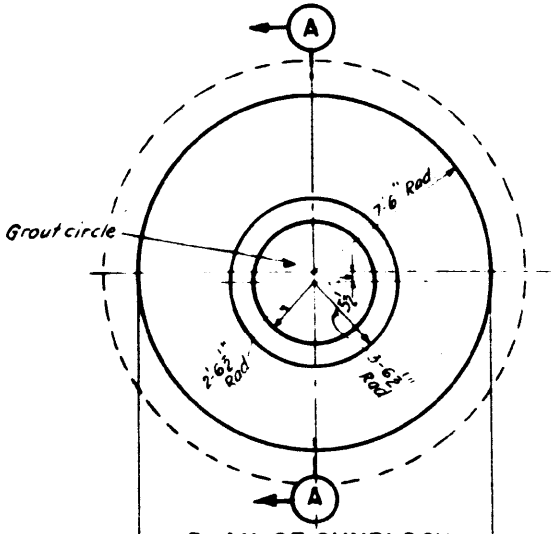

PLAN OF GUNBLOCK
2- INSTALLED

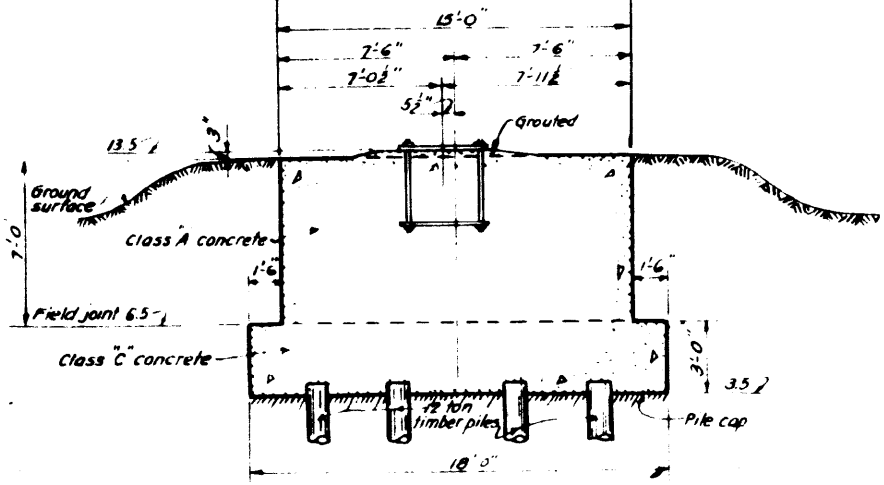

SECTION A-A
SCALE: $\frac{1}{8}$" = 1'-0"

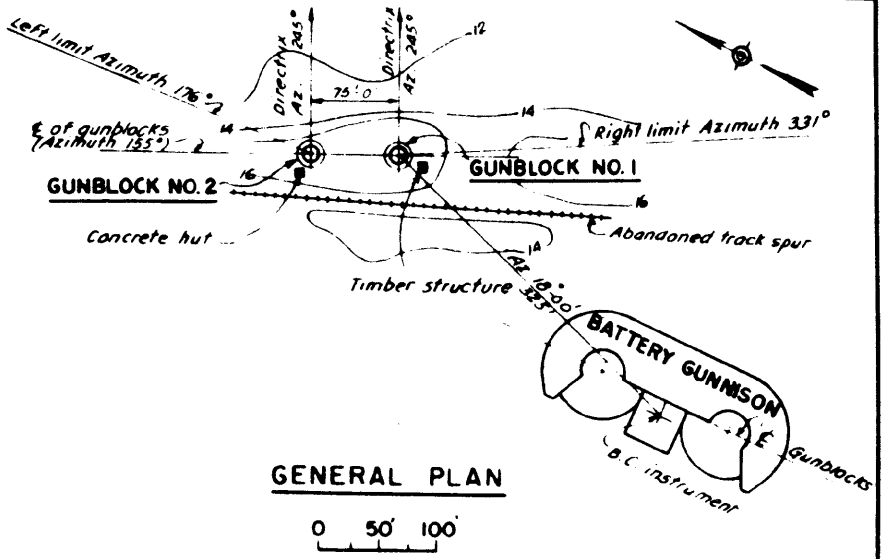

GENERAL PLAN
0 50' 100'

SECRET

NOTE:
Elevations refer to Mean Low Water Datum

HARBOR DEFENSES OF NEW YORK
GUN PLATFORM
3 IN. RAPID FIRE GUNS
FORT HANCOCK NEW JERSEY
SCALE AS SHOWN