GUIDELINE FOR

PREPARATION OF

DESIGN AND CONSTRUCTION

DRAWINGS

Reference Manual 10A

NATIONAL
PARK
SERVICE

DEPARTMENT
OF THE INTERIOR

APRIL 2001

CONTENTS

CHAPTER ONE

Introduction

1. INTRODUCTION

The following guideline is intended for National Park Service employees, joint agencies, and architectural and engineering (A/E) contractors for use in the preparation of NPS preliminary design (final submittal), construction and as-constructed drawings. To produce archivable drawings, maintain uniformity of work and to facilitate review of both A/E submittals and NPS-generated products, these requirements should be met for all drawings. Drawings that do not meet these guidelines are unacceptable. If some special condition makes it impractical or impossible to conform to these requirements, the problem should be referred to the Project Manager, Denver Service Center, for resolution. In the case of park or System Support Office-produced projects, refer to the official responsible for the project.

Director's Order 10A sets forth the basic requirements. This document, Reference Manual 10A, includes specific information and graphic examples of drawing requirements. Specific size requirements are noted within the document although illustrations shown are for graphic representation only and may not be shown at actual size.

A CADD User's guide is available from the Denver Service Center to assist in the preparation of acceptable computer generated drawings, or can be accessed from the following web site: http://165.83.23.11/dsc/cadd.

CHAPTER TWO

Drawing Format

2. DRAWING FORMAT

MATERIALS AND SUPPLIES AVAILABLE FROM NPS

The following material prepared by the Denver Service Center may be obtained upon request from the A/E managers:

- Cover sheets for parks
- Standard drawing sheets
- Standard details

STANDARD SHEETS

Standard 22"x34" NPS drawing sheets (Exhibit 2-A) are used for preliminary design, construction, and as-constructed drawings. Reduced-size samples of standard drawing sheets, showing overall sheet size and trim lines are shown in Exhibit 2-A. The exhibit also shows the location of the approval and revision blocks when required. Any sheet sizes other than 22"x34" require written approval prior to use.

Cover Sheet Standard cover sheets with vicinity and park maps should be used for all NPS projects.

All cover sheets should contain:

- A vicinity map
- A park map showing the project site location
- Basic data (source of information and date of cover sheet base preparation)
- A bar scale including a metric scale
- Required approval and revision blocks
- A solicitation number on drawings prepared for bid
- A construction contract number on as-constructed drawings
- If applicable, information regarding the A/E firm, subcontractors, and contract number.

A/E logos are not permitted. The format for presenting A/E firm and subcontractor information is shown on Page 2 of Exhibit 2B. If a set of drawings is prepared in part by the DSC and in part by an A/E, then the A/E information block should be placed only on those drawings for which they are responsible (see Page 3 of Exhibit 2B). If the state in which a project is located requires a professional stamp(s), then the A/E should also submit one stamped set of nonreproducible record drawings to the DSC and each sheet should be stamped. The stamp should be placed to the left side of the A/E firm information block.

An index to the sheets in the set is added to the cover sheet if possible; otherwise, the index is placed on a separate second sheet.

Second Sheets. These sheets are to be used for all subsequent drawings with the exception of those listed below.

Plan and Profile Sheets. These are preprinted with the second sheet title block. For manual drafting, the grid should be red ink; orange ink is unacceptable.

Survey Sheets. These sheets have been designed to be used on all NPS survey projects.

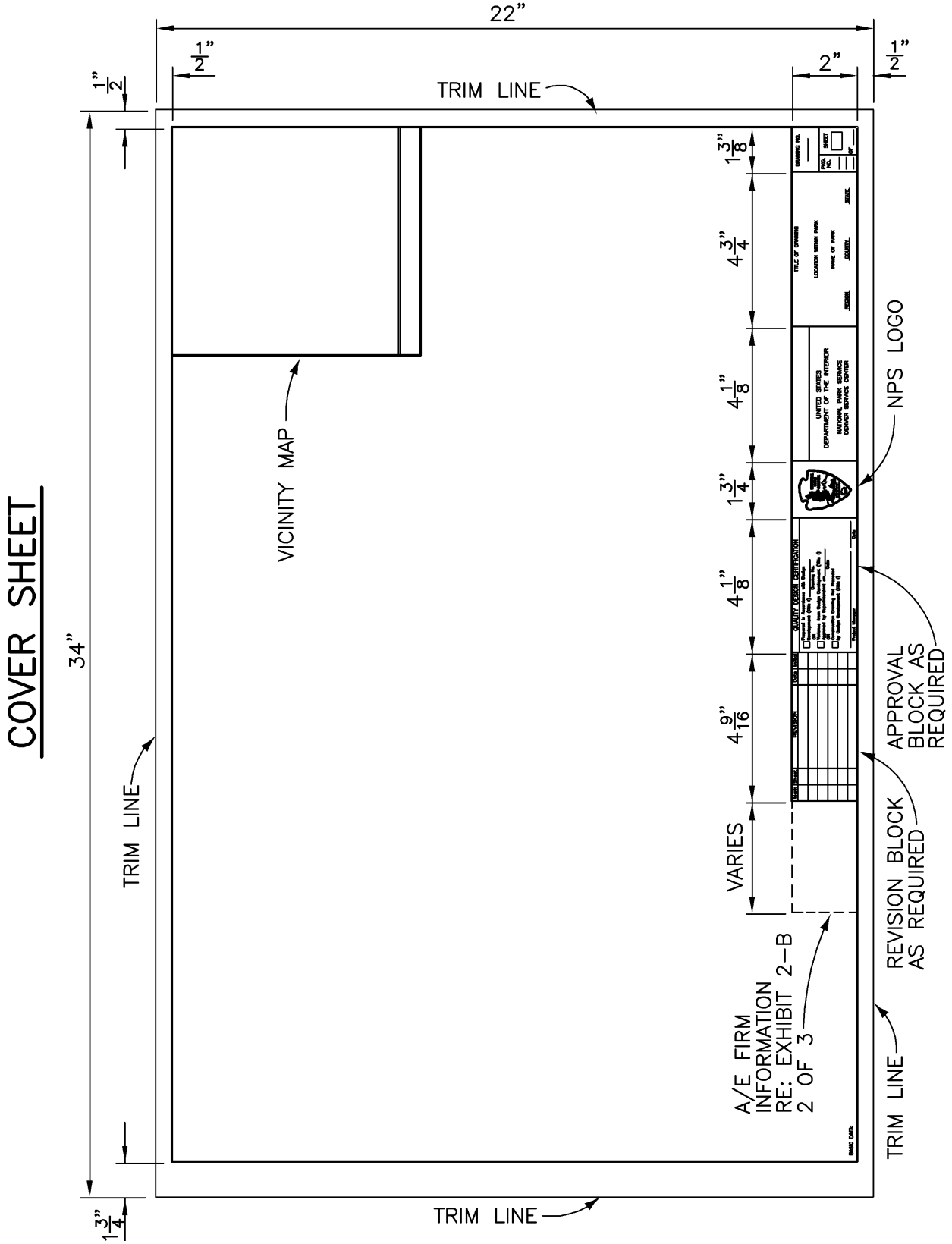
COVER SHEET
22"
1/2"
2"
1/2"
1/2"
34"
1 3/4"
TRIM LINE
TRIM LINE
TRIM LINE
TRIM LINE
VICINITY MAP
1 3/8"
4 3/4"
4 1/8"
1 3/4"
4 1/8"
4 9/16"
VARIES
NPS LOGO
APPROVAL BLOCK AS REQUIRED
REVISION BLOCK AS REQUIRED
A/E FIRM INFORMATION RE: EXHIBIT 2-B 2 OF 3
DRAWING NO.
PKG. NO.
SHEET
OF
TITLE OF DRAWING
LOCATION WITHIN PARK
NAME OF PARK
REGION
COUNTY
STATE
UNITED STATES
DEPARTMENT OF THE INTERIOR
NATIONAL PARK SERVICE
DENVER SERVICE CENTER
QUALITY DESIGN CERTIFICATION
Project Manager
Date
Mark
Sheet
REVISION
Date
Initial
BASIC DATA:

SECOND SHEET

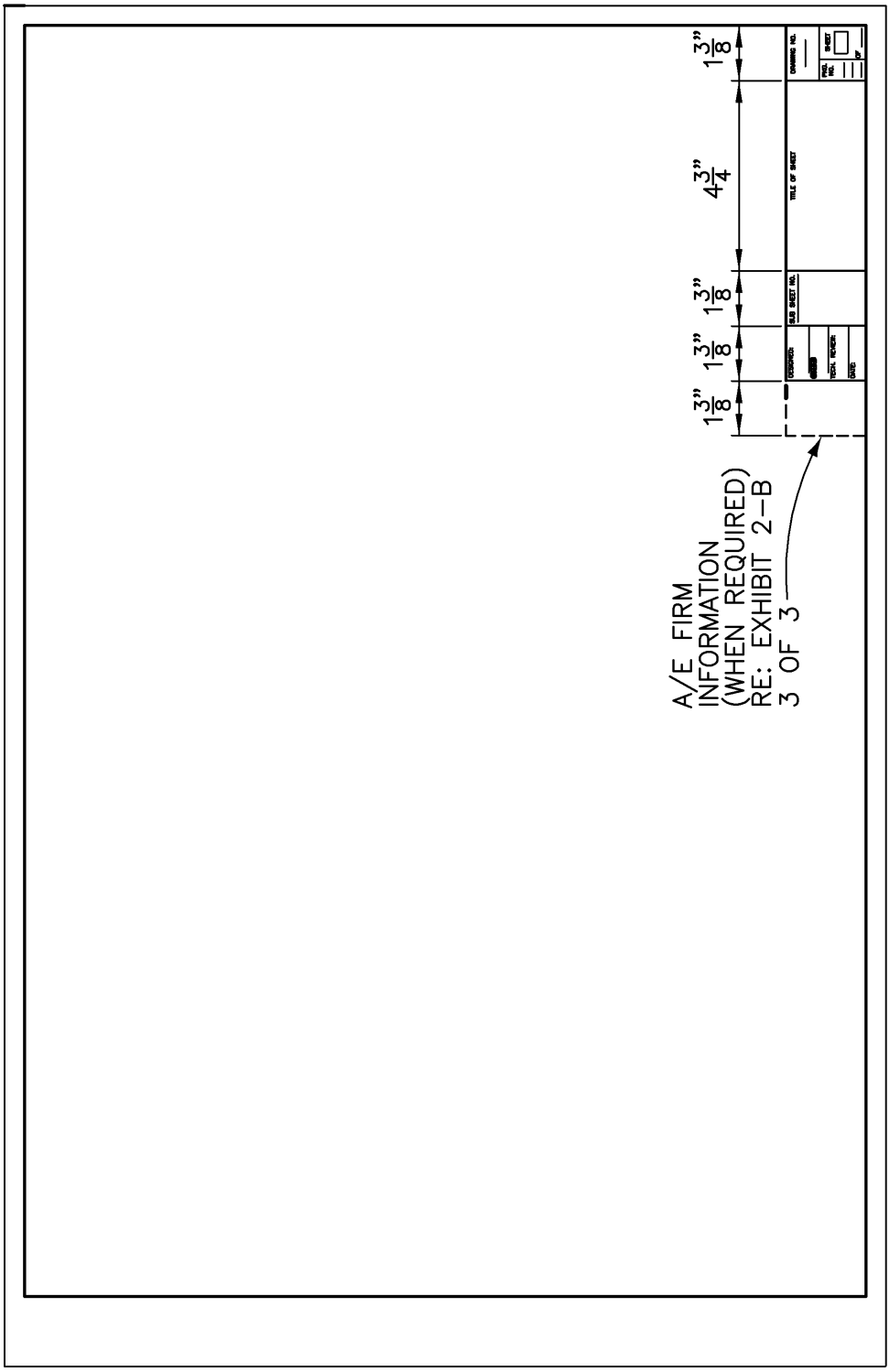

OVERALL DIMENSIONS OF SECOND SHEET SAME AS COVER SHEET

PLAN/PROFILE SHEET

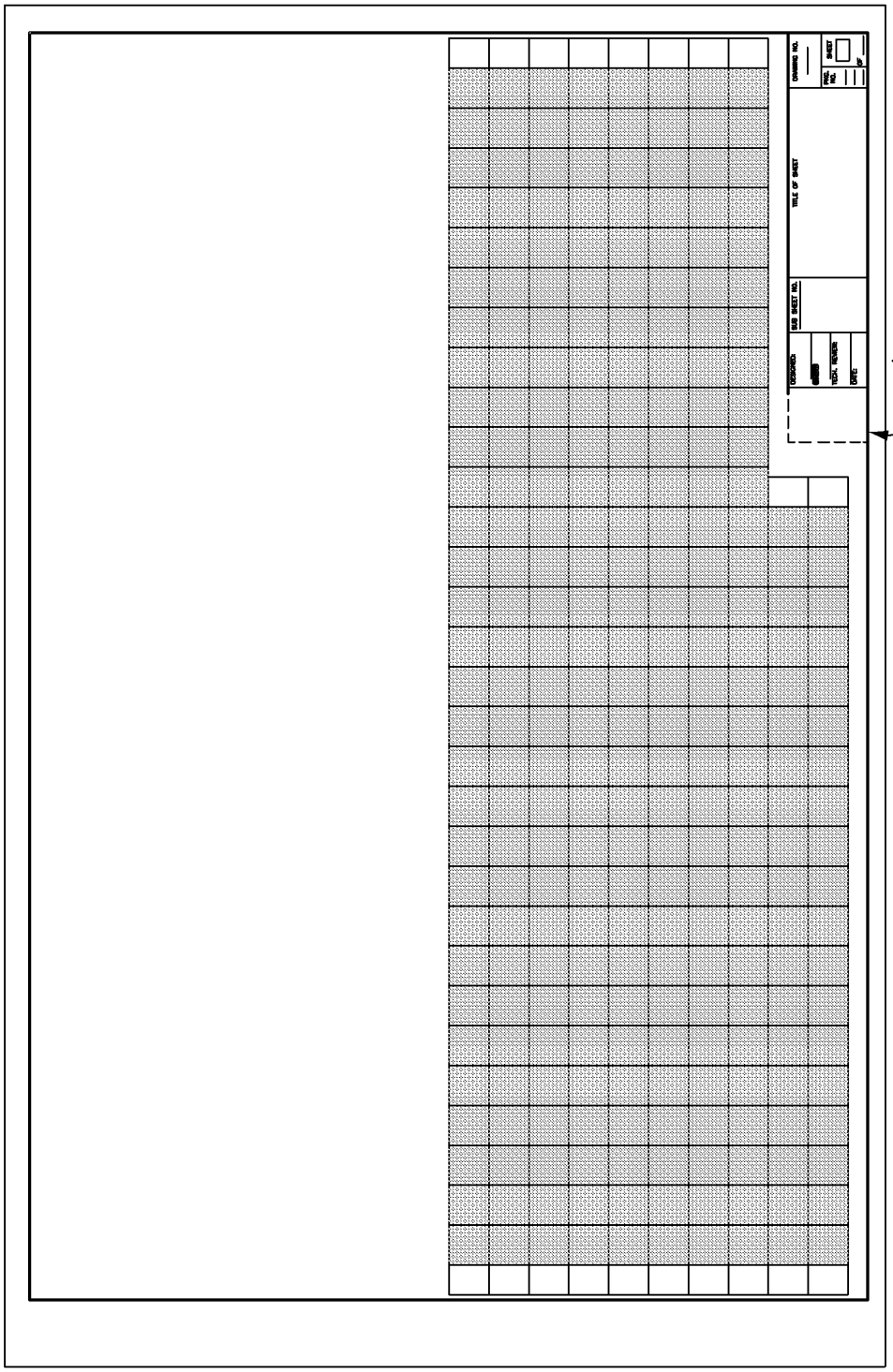

A/E FIRM INFORMATION
(WHEN REQUIRED)
RE: EXHIBIT 2–B, 3 OF 3

OVERALL DIMENSIONS OF PLAN AND PROFILE SHEET SAME AS COVER SHEET

SURVEY SHEET

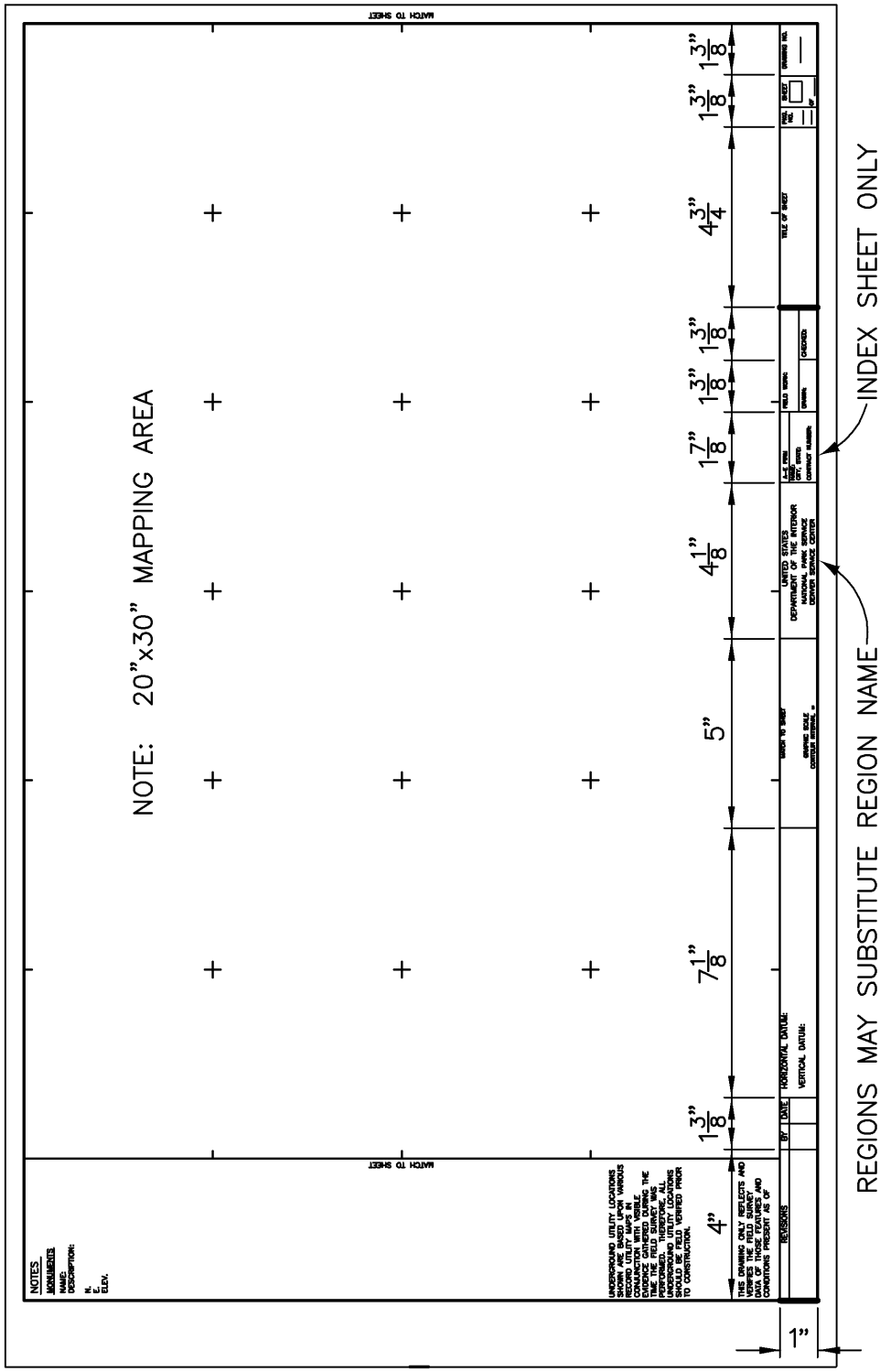

REGIONS MAY SUBSTITUTE REGION NAME

INDEX SHEET ONLY

OVERALL DIMENSIONS OF SURVEY SHEET SAME AS COVER SHEET

TITLE BLOCKS

Title blocks on cover sheets include the project title, specific location within the park, park name, region, county, and state (see Page 1 of Exhibit 2-B). If the park is in more than one county, show only the county in which the particular project is located. Title blocks on second sheets contain the title of the sheet (sheet contents) and park name. If location within the park is specified, it should follow the same standard size for location within park as shown on Page 1 of Exhibit 2-B. The samples in Exhibit 2-B show how to prepare the title blocks for cover and second sheets.

SOLICITATION OR CONSTRUCTION CONTRACT NUMBERS

Page 1 of Exhibit 2-B shows the proper size and placement of solicitation or construction contract numbers, which appear above the title block on drawings prepared for bid (solicitation number) or on as-constructed drawings (construction contract number).

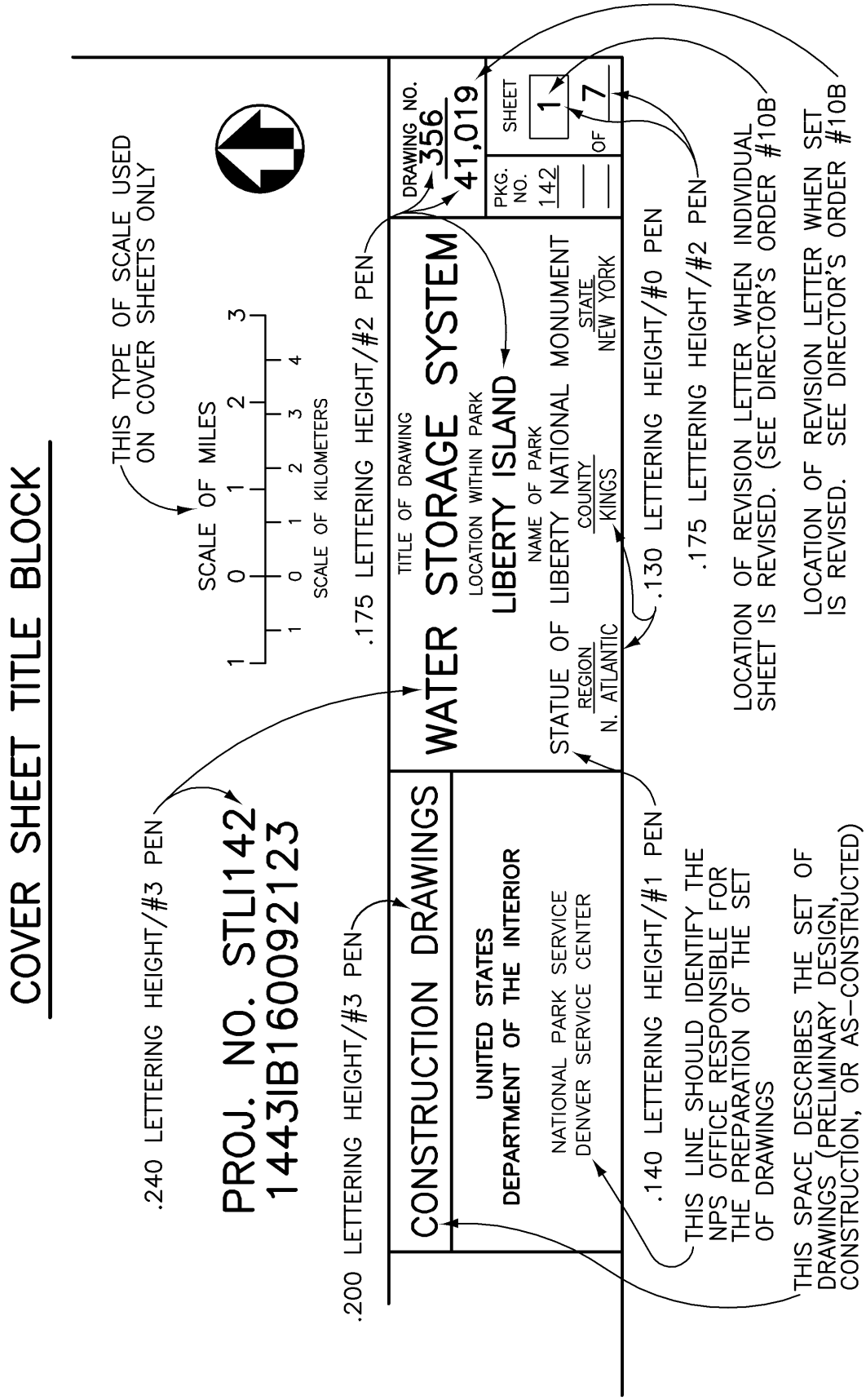
COVER SHEET TITLE BLOCK
THIS TYPE OF SCALE USED ON COVER SHEETS ONLY
SCALE OF MILES
1 0 1 2 3
1 0 1 2 3 4
SCALE OF KILOMETERS
.175 LETTERING HEIGHT/#2 PEN
DRAWING NO.
356
41,019
SHEET
1
OF
7
PKG. NO.
142
TITLE OF DRAWING
WATER STORAGE SYSTEM
LOCATION WITHIN PARK
LIBERTY ISLAND
NAME OF PARK
STATUE OF LIBERTY NATIONAL MONUMENT
STATE
NEW YORK
COUNTY
KINGS
REGION
N. ATLANTIC
.130 LETTERING HEIGHT/#0 PEN
.175 LETTERING HEIGHT/#2 PEN
LOCATION OF REVISION LETTER WHEN INDIVIDUAL SHEET IS REVISED. (SEE DIRECTOR'S ORDER #10B
LOCATION OF REVISION LETTER WHEN SET IS REVISED. SEE DIRECTOR'S ORDER #10B
.240 LETTERING HEIGHT/#3 PEN
PROJ. NO. STLI142
1443IB160092123
.200 LETTERING HEIGHT/#3 PEN
CONSTRUCTION DRAWINGS
UNITED STATES
DEPARTMENT OF THE INTERIOR
NATIONAL PARK SERVICE
DENVER SERVICE CENTER
.140 LETTERING HEIGHT/#1 PEN
THIS LINE SHOULD IDENTIFY THE NPS OFFICE RESPONSIBLE FOR THE PREPARATION OF THE SET OF DRAWINGS
THIS SPACE DESCRIBES THE SET OF DRAWINGS (PRELIMINARY DESIGN, CONSTRUCTION, OR AS-CONSTRUCTED)

A/E INFORMATION ON COVER SHEET

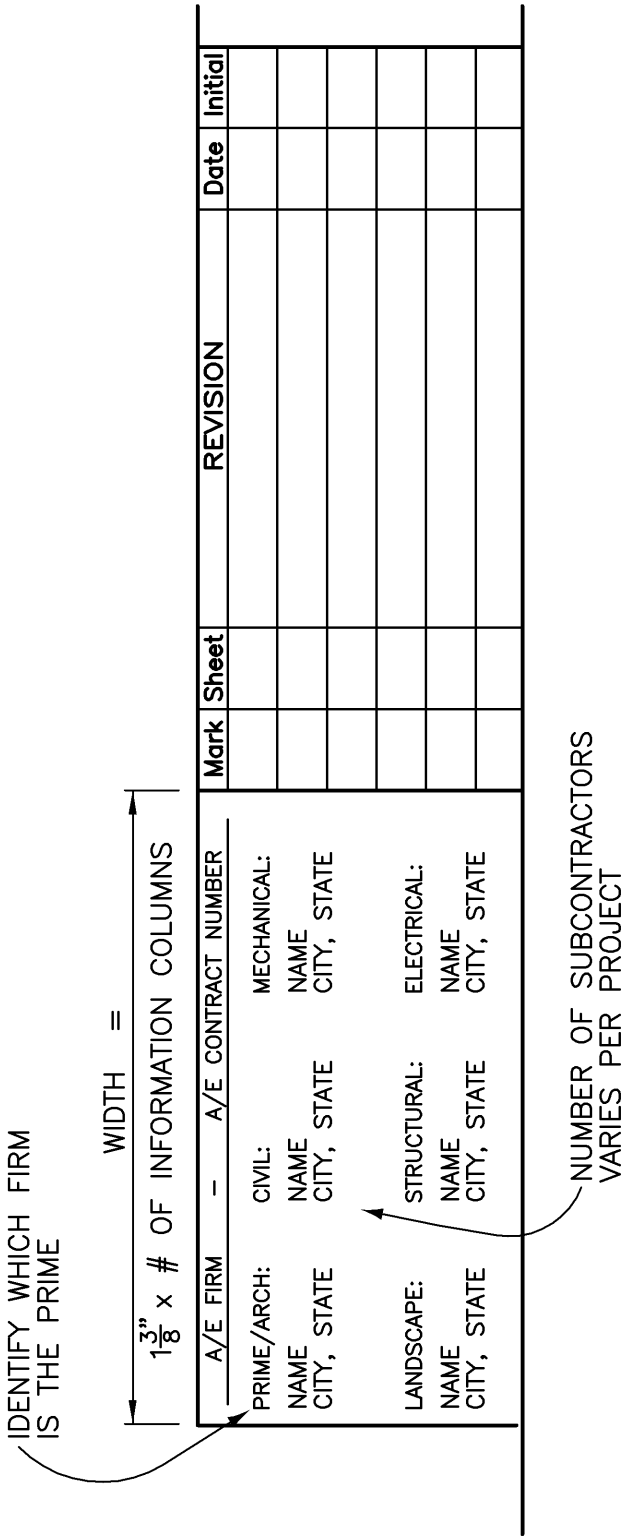

SECOND SHEET TITLE BLOCK

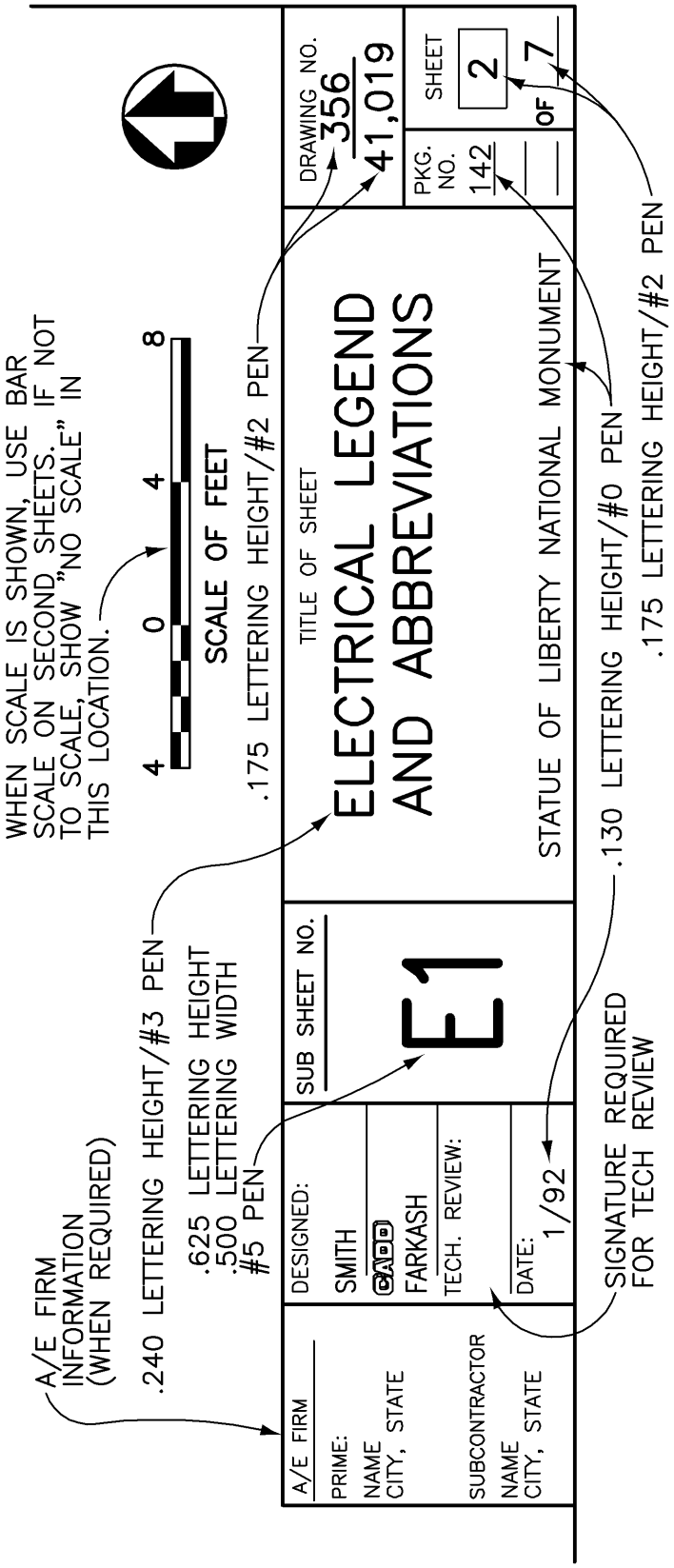

APPROVAL AND REVISION BLOCKS

Approval and revision blocks are preprinted on the cover sheet or first sheet, as required (see Exhibit 2-C).

Approval Block. Use on all preliminary design and construction drawing sets. All preliminary design and construction drawings prepared by parks, System Support Offices, or the Denver Service Center require approval signatures.

Revision Block. Required for changes to construction drawings which have been issued for bid and therefore are official contract documents. Include:

- An identifying mark (a triangle with a number or letter, used to key the information in the revision block to the part of the drawing it pertains to)
- The sheet number(s) of the sheets with that change or addition
- A brief description of the revision
- The date of the revision
- The initials of the person responsible for the revision.

A completed block is shown in Appendix E.

The information in the revision block is keyed to the drawings by encircling the affected part of each drawing and placing a revision mark on or within the circle (See page 3 of Chapter 3 under "use of ink or pencil"). When major revisions are made to a sheet, a note "General Revision" above the title block is acceptable.

APPROVAL BLOCKS

(SAMPLE)

PRELIMINARY

RECOMMENDED: _____ _____
Project Manager Date

APPROVED: _____ _____
Superintendent Date

PRELIMINARY

RECOMMENDED: _____ _____
Project Manager Date

RECOMMENDED: _____ _____
Superintendent Date

APPROVED: _____ _____
Regional Director Date

APPROVAL BLOCKS

(SAMPLE)

CONSTRUCTION

QUALITY DESIGN CERTIFICATION

☐ Prepared in Accordance with Design Development (Title I) _____
Drawing No.

OR

☐ Variance from Design Development (Title I) Approved by Superintendent on _____
Date

OR

☐ Construction Drawing Not Preceded by Design Development (Title I)

_____ _____
Project Manager Date

REVISION BLOCK

Mark	Sheet	REVISION	Date	Initial

DRAWINGS REISSUED FOR BID

REISSUED BID PACKAGES: Drawings and specifications that did not make it through a successful first bid and are rebid are identified as a reissued bid package.

DRAWINGS: Whether or not changes are made to the drawings, a revision letter is added to the drawing number to show that the drawings are being reissued. On the cover sheet, an R is added to the old project number (JELA-133A-R) and a new solicitation number replaces the old one. If no changes are made to the drawings, the words "Reissued for bid, no changes to the drawings" and the date are added to the Revision Block. If changes are made to the drawings, the words "Reissued for bid," the sheet numbers of the revised drawings, and the date are added to the Revision Block.

SPECIFICATIONS: The project number and solicitation number are also changed on the Project Manual.

REVISION LETTER:

See Drawing and Map Numbers Guideline, Director’s Order 10B.

DRAWINGS FOR CONTRACT MODIFICATIONS

Drawings prepared to accompany a construction contract modification shall follow Director’s Order 10A. The contracting officer's representative (COR) is responsible for submitting the drawings or sketches, as appropriate, for inclusion in the contract modification package. In most cases, the drawings or sketches will actually be prepared by the project designer. The drawings or sketches will be furnished to TIC (by whomever initially prepares these documents) for filming or filing, as appropriate, immediately after preparation to avoid loss. In the event changes are made to the design during the modification negotiation process, or if the modification is not executed, the COR is responsible for advising TIC of the changes. The COR is also responsible for incorporating the changes into the as-built drawings.

When sketches are used rather than standard drawing sheets, the sketches must include the project number, drawing number, project title, person responsible for drawing, and the date prepared.

NORTH ARROWS

When possible the drawings should be laid out so north is toward the top or left of the sheet. The orientation of north should be maintained throughout a set of drawings, if possible. When a north arrow is required, it is normally placed in the lower right-hand corner above the title block (see Page 3 of Exhibit 2-B). Recommended style for north arrows appears in Exhibit 2-D. When more than one north arrow is used on the same sheet, each arrow should be placed near the title of the specific view it orients (see "Specific View Titles," below).

SCALES

All scales should be graphic scales (see Exhibit 2-E). If a single scale applies to an entire sheet, place scale above the title block. If an entire drawing sheet is not to scale, the term "NO SCALE" should appear above the title block. If more than one scale is used on a sheet, place scales below the title of each section or detail. If a specific section or detail is not drawn to scale, the term "NO SCALE" should appear below the title of that section or detail. If more than one scale is used on a sheet, but one or more of them is used repetitively, group all scales above the title block, and reference each section or detail to the corresponding scale (see Page 4 of Exhibit 2-E).

Scales of associated drawings should be the same for all disciplines.

SPECIFIC VIEW TITLES

Instructions for drawing section or detail symbols are provided in Exhibit 2-F.

RECOMMENDED NORTH ARROWS

WHEN NORTH ARROW APPLIES TO ENTIRE DRAWING AND IS SHOWN ABOVE TITLE BLOCK, USE A $\frac{3}{4}$" CIRCLE.

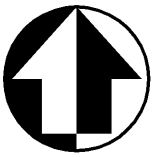

WHEN NORTH ARROW APPLIES ONLY TO PORTIONS OF A DRAWING, IT SHOULD BE SHOWN IN VICINITY OF SPECIFIC PLAN TITLE, USING A $\frac{1}{2}$" CIRCLE.

BUILDING NORTH – THE NORTHERLY DIRECTION OF THE BUILDING DISTINGUISHED FROM THE GEOGRAPHIC NORTH.

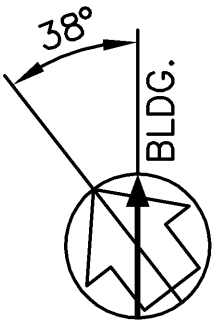

COVER SHEET GRAPHIC SCALE

THIS SCALE IS USED ONLY ON COVER SHEETS

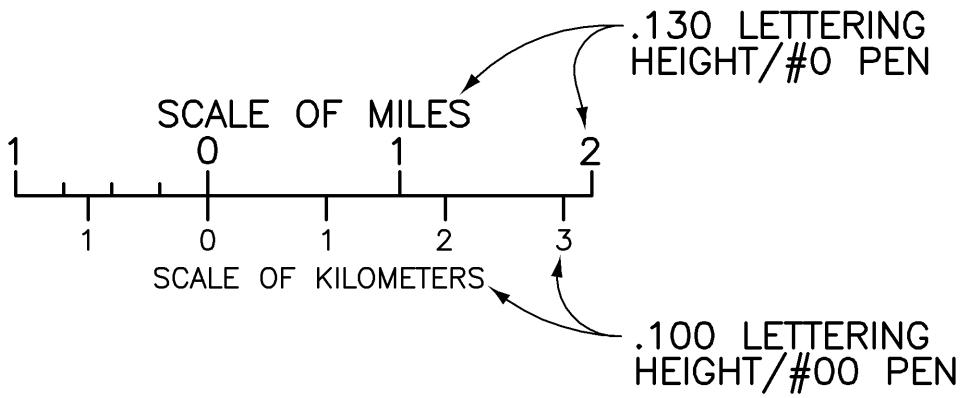

STANDARD GRAPHIC SCALE

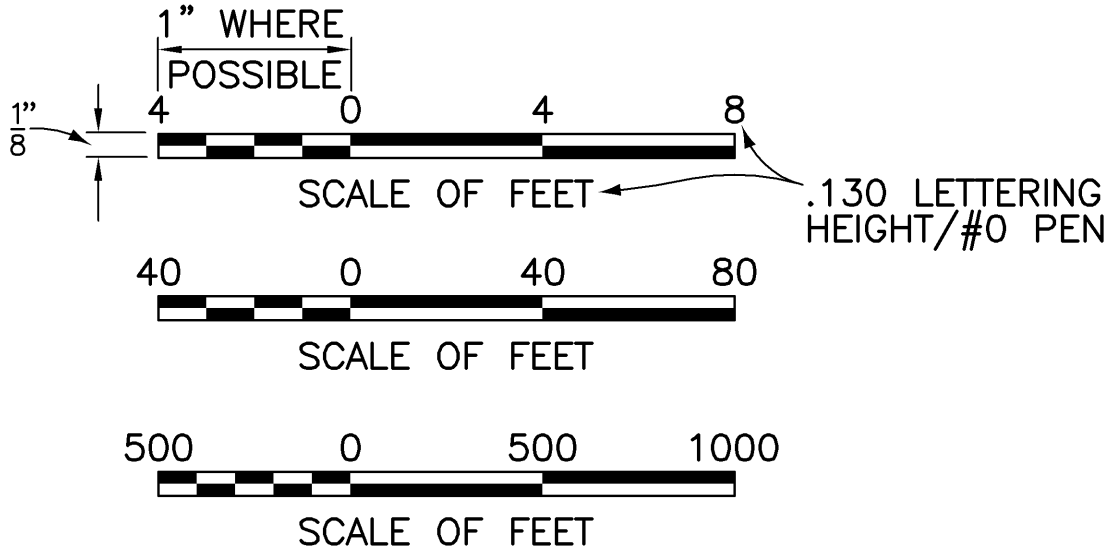

DO NOT SHOW TEXT SCALES ($\frac{1}{4}$" = 1'–0"). TEXT SCALES ARE NOT ACCURATE AS DRAWINGS ARE OFTEN REDUCED AND DISTORTED.

STANDARD SCALES

COMMON ARCHITECTURAL & ENGINEERING SCALES

$\frac{1}{8}$" = 1'–0"

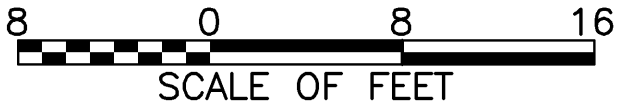

$\frac{1}{4}$" = 1'–0"

$\frac{1}{2}$" = 1'–0"

$\frac{3}{4}$" = 1'–0"

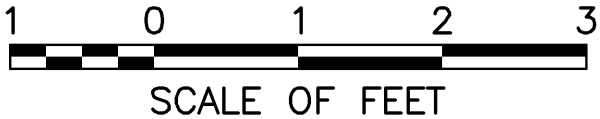

1" = 1'–0"

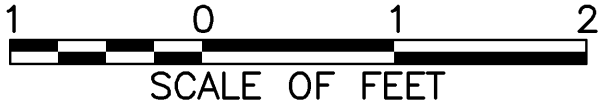

$1\frac{1}{2}$" = 1'–0"

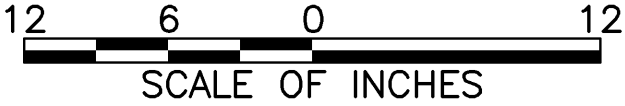

3" = 1'–0"

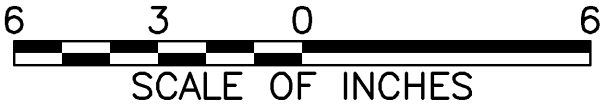

1" = 10'

1" = 20'

1" = 40'

1" = 50'

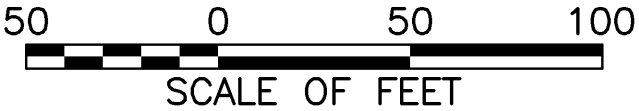

PROFILE SCALES

PROFILES ARE USUALLY DRAWN WITH DIFFERENT HORIZONTAL AND VERTICAL SCALES. THIS IS DONE TO EXAGGERATE THE VERTICAL DIMENSIONS SO THE PROFILE CAN BE EASILY DRAWN AND READ.

A FEW COMMON SCALE COMBINATIONS:

1"= 20' HORIZ. 2' VERT. 1"= 40' HORIZ. 10' VERT. 1"= 20' HORIZ. 5' VERT. 1"= 100' HORIZ. 20' VERT.

THESE SHOULD ALWAYS BE SHOWN WITH A GRAPHIC SCALE AS IN THIS EXAMPLE:

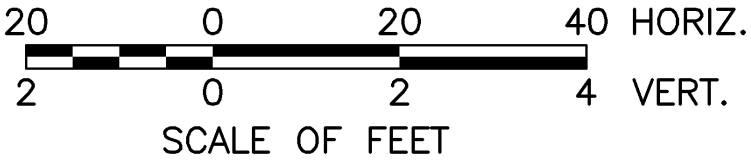

GROUPING MULTIPLE SCALES

MULTIPLE SCALES WILL BE LOCATED ABOVE THE TITLE BLOCK (IF POSSIBLE) AND WILL BE SHOWN AS FOLLOWS:

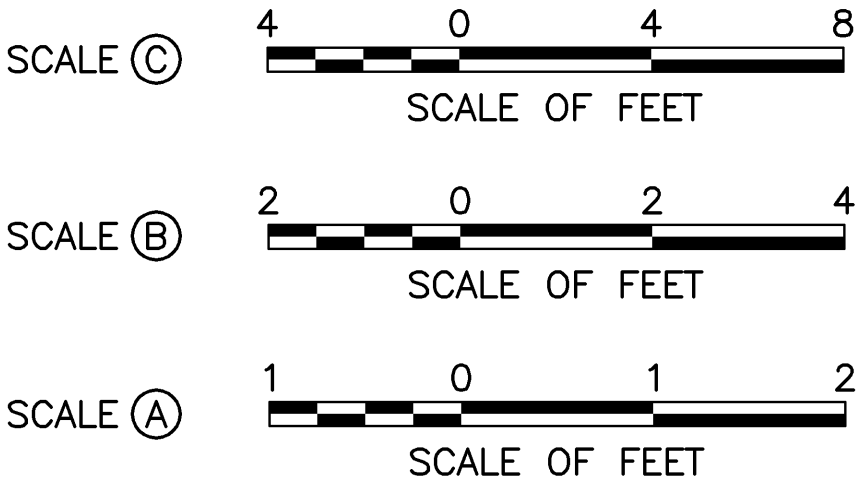

REFERENCE TO SCALES

WHEN USING MULTIPLE SCALES ON A DRAWING, THE SCALE SHOULD BE REFERENCED BELOW TITLE OF SECTION OR DETAIL AS SHOWN BELOW:

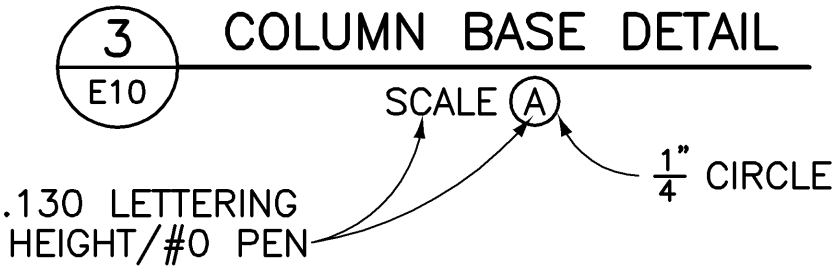

SECTION OR DETAIL IDENTIFICATION SYMBOLS

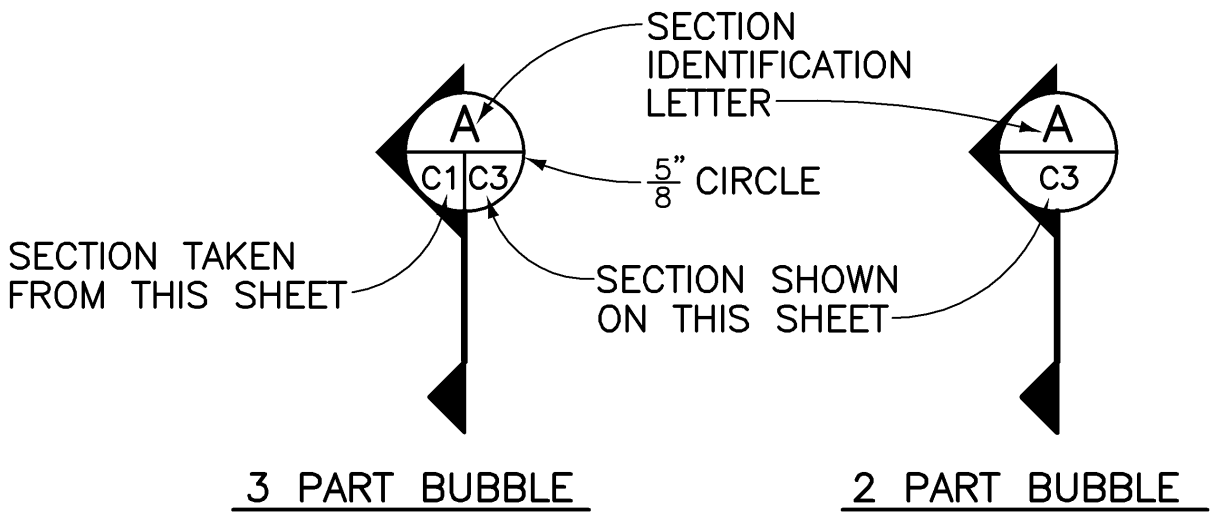

IDENTIFICATION LETTER AND SHEET NUMBERS SHOULD ALWAYS BE DRAFTED HORIZONTALLY, AS SHOWN BELOW:

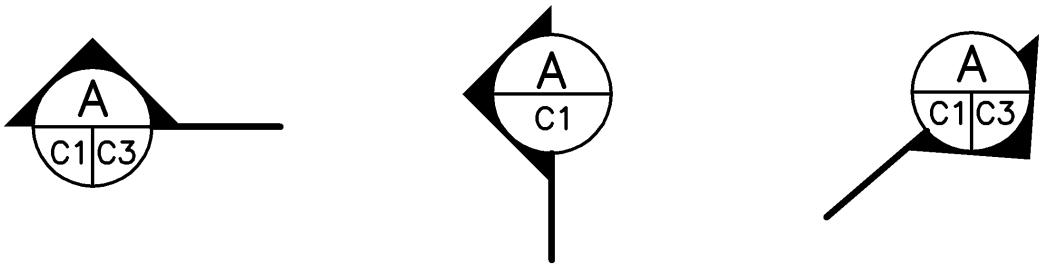

NOTE

CIRCLES ARE $\frac{5"}{8}$; DETAIL OR SECTION LETTER CALLOUTS ARE .175 LETTERING HEIGHT/#2 PEN; SHEET NUMBER REFERENCES ARE .110 LETTERING HEIGHT/#0 PEN

SECTION OR DETAIL IDENTIFICATION SYMBOLS

DETAIL REFERENCES SHOULD BE SHOWN AS FOLLOWS:

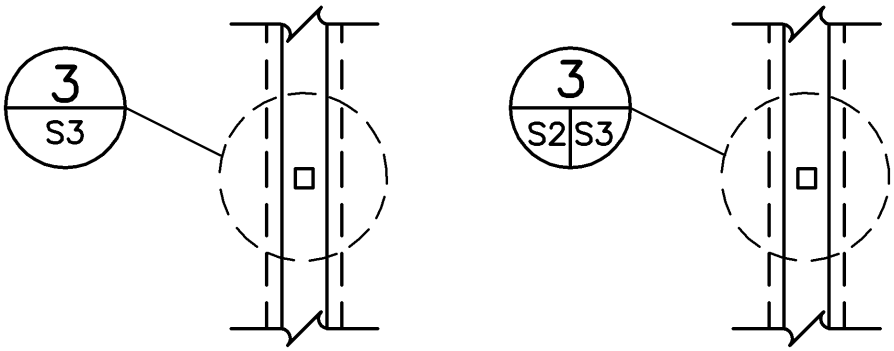

2 PART BUBBLE 3 PART BUBBLE

WHEN ENCLOSING AN AREA INDICATING AN ENLARGED DETAIL, THE OUTLINE SHOULD BE SHOWN AS A DASHED LINE.

DETAIL OR SECTION REFERENCES LOCATED IN ANY NOTE FORM SHALL BE SHOWN AS FOLLOWS:

CONCRETE WALK. SEE DETAIL 3/L7. MATCH LINES AND GRADES OF EXISTING CURB.

TYPICAL TITLES

TYPICAL TITLE FOR A SECTION (DESIGNATED WITH A LETTER):

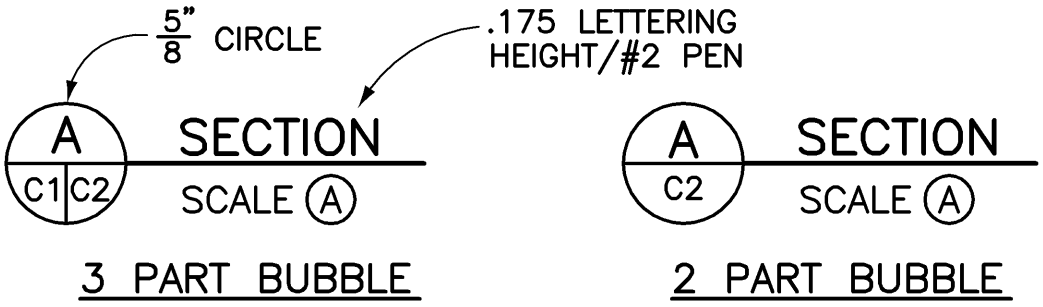

3 PART BUBBLE 2 PART BUBBLE

TYPICAL TITLES FOR A DETAIL (DESIGNATED WITH A NUMBER):

3 PART BUBBLE 2 PART BUBBLE

WHEN A SECTION OR DETAIL IS TAKEN FROM MORE THAN ONE SHEET AND A 3-PART BUBBLE IS USED:

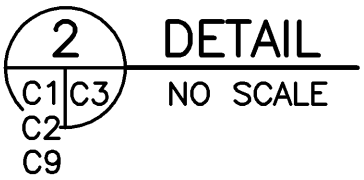

TYPICAL TITLE WITHOUT BUBBLE:

CONCRETE VALVE BOX

SCALE OF FEET

BUILDING LINES

BUILDING LINES THAT ARE ASSOCIATED WITH THE CENTER LINE OF AN OBJECT SHOULD BE SHOWN AS A CENTER LINE. IF A BUILDING LINE IS NOT REPRESENTING A CENTER LINE, IT SHOULD BE SHOWN AS A PHANTOM LINE.

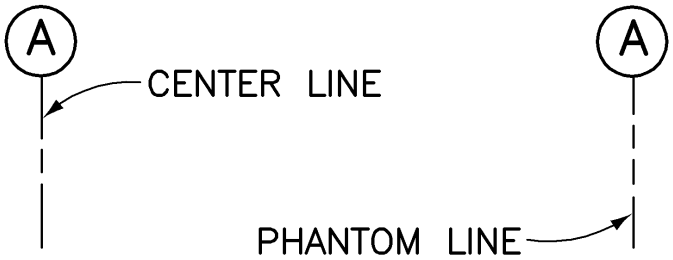

ALL BUILDING LINE REFERENCES SHOULD BE READ HORIZONTALLY.

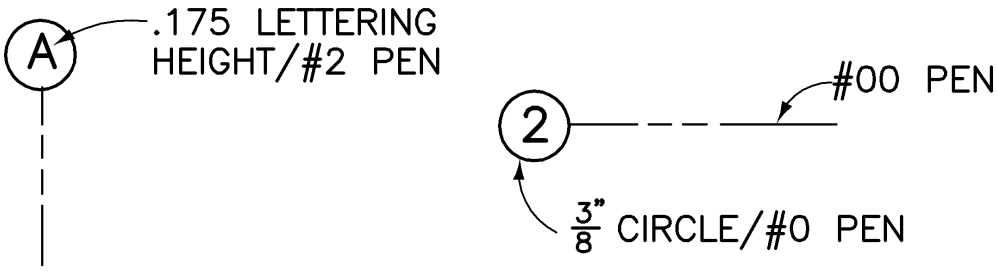

MAJOR LINES SHOULD BE NUMBERED WITH LETTERS OF THE ALPHABET OR WHOLE NUMBERS. MINOR LINES APPEAR BETWEEN MAJOR LINES. A MINOR LINE SHOULD BE NUMBERED ACCORDING TO HOW FAR IT IS FROM THE PRECEEDING MAJOR LINE. THE NUMBERING OF MINOR LINES SHOULD REPRESENT THE NUMBER OF TENTHS OF THE DISTANCE BETWEEN MAJOR LINES.

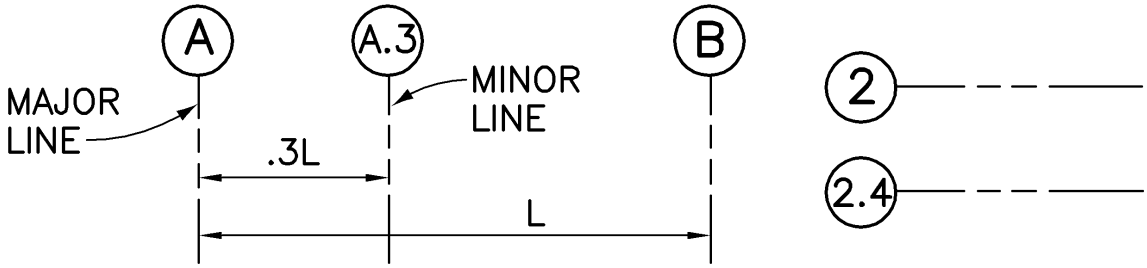

MINOR LINE CALLOUTS, OR CALLOUTS WITH MORE THAN ONE NUMBER SHALL BE .140 LETTERING HEIGHT/#1 PEN.

CHAPTER THREE

Drafting Practices

3. DRAFTING PRACTICES

All NPS drawings are microfilmed and therefore must be capable of being reproduced as clear and legible half-size prints. This is particularly important for construction drawings being issued to prospective bidders as nominal half-size prints.

Consistent line density and clear, legible lettering are essential. Originals and photographic duplicates that cannot be reproduced as clear and legible half-size prints are unacceptable.

All NPS drafting practices apply to both manual and computer-aided drafting.

GENERAL

These drafting practices are to be followed:

- Maintain even line weight.
- Avoid line congestion.
- Match line weight when making additions or changes.
- Keep drawings clean and uncreased.
- Keep erasures at a minimum, with no ghosting.
- Maintain dark, clear, sharp, uniform lines to ensure good reproduction and microfilm.
- Differentiate outlines and section lines by varying the width of lines, not by changing densities; the density of the line should be constant.
- Use line work techniques for distinctive symbols and crosshatching.
- Do not use pencil for shading or toning.
- Ensure open spacing of lines and lettering.
- Clean out all graphics behind text to ensure good legible drawings.

ACTUAL ELEVATION VS. REFERENCE BUILDING ELEVATION

If a reference building elevation is set that is different from the actual elevation, it should be noted on the plan sheets.

ABBREVIATIONS

Words written in full are preferred. However, abbreviations may be used if necessary to conserve space and ensure neatness and readability. All abbreviations should be described in a legend and used consistently throughout a discipline. See Appendix C for NPS recommendations. Edit suggested abbreviations as needed.

ADHESIVE-BACKED MATERIALS

No adhesive-backed material or rub on transfers of any kind will be accepted on any final original. Adhesive backed strips applied to original drawings in order to file them in hanging drawing files (such as EASI FILE) are not acceptable.

COLORS USED IN THE REVIEW AND UPDATING OF DRAWINGS

Additions, changes, and corrections must be marked on check prints and as-constructed prints using the following color code:

- RED--indicates additions
- GREEN--indicates deletions
- BLUE--indicates general notation or specific instruction to draftsman
- YELLOW--indicates okay as shown (use when necessary)

DIMENSION FORMAT

All dimensions 1'-0" and over should be called out in feet and inches. If a measurement other than feet and inches is accepted industry-wide to describe a product or spacing, the common measure should be used. For example:

48" pipe (not 4'-0" pipe)
16" o.c. (not 1'-4" o.c.)

Both slash marks and arrows are acceptable as line terminators as long as they are consistent within a discipline.

Survey and site work layout dimensions should be feet and decimals.

ENLARGED DETAIL:

If a detail of a certain item is to be enlarged, it should be shown with the same orientation as the item from which it was taken. It should not be turned 90 degrees or shown in reverse direction.

LAYOUT LINES

Layout lines and guidelines used in preparing originals must be invisible on reproduced drawings and microfilm.

NEW WORK AND EXISTING CONDITIONS

New work should be easily distinguishable from other information shown on the drawings. Show new work at 100% (unscreened) and show existing conditions, including text, screened at 50%. Background information shown for orientation or clarification may be screened at 50%.

Survey drawings should be shown at 100% (unscreened) to be screened later if incorporated into design drawings.

DRAWINGS VS. SPECIFICATIONS

Limit text within the drawings to the required notation, avoiding duplication of information within the drawings and the written specifications.

LETTERING - SIZES AND PEN WEIGHTS

The following pen and lettering sizes are recommended for full sized drawings so that text will be easily readable after drawings are reduced to half-size.
No line weight should be less than .012" in thickness (or #00 pen). When possible use .014" in thickness (or #0 pen).

Use only one type of lettering style, vertical and all uppercase.

Maintain a minimum lettering height of:
* Mechanical - .100; when possible, use .130
  Freehand - 1/8"

For each numeral in a fraction, maintain a minimum lettering height of:
* Mechanical - .100
  Freehand - 1/8"

* Refers to Leroy® and computer aided drafting.

SYMBOLS

Preferred symbols and line symbols with abbreviations for the most common drawing elements are in Appendix C. All symbols used should appear in a legend and should be used consistently throughout a discipline. Edit suggested symbols as needed.

USE OF COLORED INK OR PENCIL

The use of colored inks or pencils on final original drawings is prohibited.

USE OF INK OR PENCIL

Waterproof ink is recommended for all drafting surfaces. If drafting pencils are used on polyester materials, plastic lead pencils should be used. Felt-tip pens/markers should not be used.

A combination of ink and pencil should not be used on the same drawing sheet.

Soft black pencils should be used on the backs of drawings to identify revisions made after the drawings are issued for bid.

The use of grease pencils is unacceptable.

LINE SYMBOLS, LINE WEIGHTS AND LETTERING ORIENTATION

LINE SYMBOLS

MATCH LINE

CENTER LINE

PHANTOM LINE

BUILDING LINE

INVISIBLE OR HIDDEN CONSTRUCTION

BREAK LINE

PARTIAL BREAK/(CUT AWAY)

LINE WEIGHTS

LIGHT * #00 (.012)

#0 (.014)

#1 (.020)

#2 (.024)

#3 (.031)

#5 (.051)

* MINIMUM LINE WEIGHT ACCEPTED BY NPS

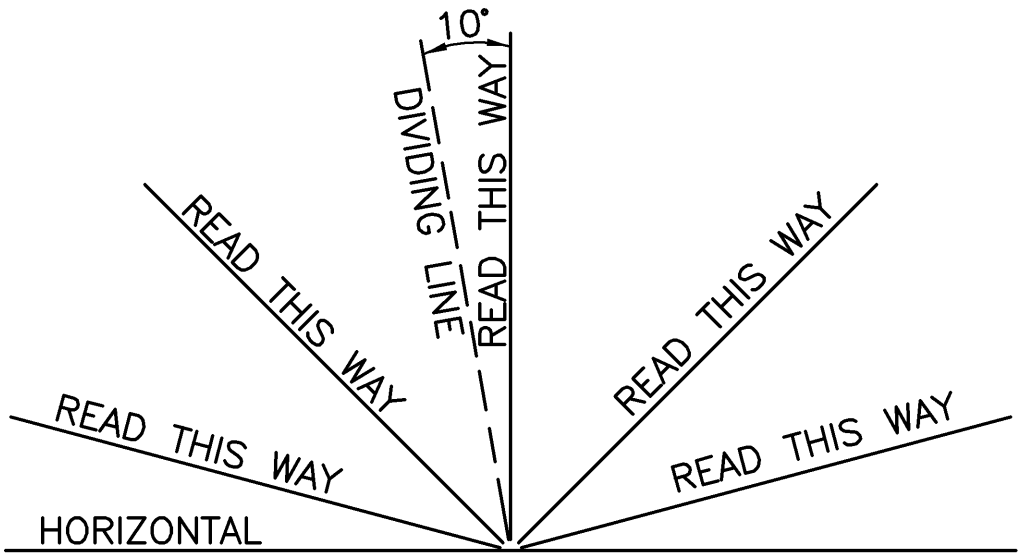

DISCIPLINE SPECIFIC GUIDELINES

Site Work Drawings (Landscape Architecture, Civil, and Survey)

Slope designation of a utility line or a grade line of a road should be expressed as a percent of slope and the direction of the slope should be designated by a + or - sign with an arrow. A positive slope is uphill in the direction of increasing station.

Slope designation of earthwork may be shown as run:rise (for example, 3:1, 4:1).

In special instances, slopes may be designated as inches of rise or fall per foot of run. For clarity, the direction of the slope should be designated with an arrow (for example, 1/4 inch per foot $\rightarrow$).

Architectural Drawings

1. On the first sheet of the architectural drawings, provide Building Code Data, including:

- Name and date of the major building code(s) to which the design conforms
- Occupancy Group
- Construction Type
- Square footage of each building

Structural Drawings

1. General Notes: should contain, as a minimum,:

- Design loads
- Name and date of model building code and/or design specifications to which the design conforms
- Soil bearing capacity or other foundation design values
- Structural materials description (for example, ASTM number, allowable stresses, etc).

2. Showing Elevations on Drawings:

Plan Sheets: Elevations should be shown on plan sheets (e.g. top of beam, top of footing, top of wall), as well as sections and details.

Decimal versus Feet and Inches: The method of expressing elevations should match the architectural drawings or other drawings to which the structural drawings pertain. For instance, if the building elevations on the architectural sheets are in feet and inches, the building elevations on the related structural drawings should be in feet and inches also. Elevations shown should be consistent throughout the set of drawings.

3. Sections and Details:

Showing Architectural Features: Sections and details may show architectural features in order to enhance the information being conveyed. These architectural features should not be shown in detail but rather outlined using a phantom line.

Poche' (material symbols): All structural materials shown in section should be poche'd. When two structural steel members are shown back to back, reverse and stagger the hatching in order to increase clarity.

Use of O.C.: It is normally not necessary to use O.C. to annotate "on center" when using "@" symbol. It is appropriate to state O.C. in cases when panelized or modular materials are being applied to framing.

4. Dimensions for Spacing of Structural Members:

Dimensions 2 feet or less: Indicated in inches.

Dimensions greater than 2 feet: Indicated in feet and inches.

5. Nominal Versus Actual Size Wood:

Nominal Size: Nominal size lumber and timber should be indicated without tick marks (e.g. 2x6, 10x10).

Actual Size: Actual size lumber and timber, including glued laminated timber, should be indicated with tick marks (e.g. 8"x8", 1 3/4", 7 3/4").

Note: For projects which contain both actual size and nominal size lumber, include a statement in the General Notes explaining this convention.

SHOWING MEMBERS IN FRAMING PLANS:

Single Members: Member should be shown as a solid line without span arrows.

Repetitive Members:

Pre-Manufactured Materials: Members should be shown as the first and last two members of the layout with member identification, distance between members, how many, and spacing.

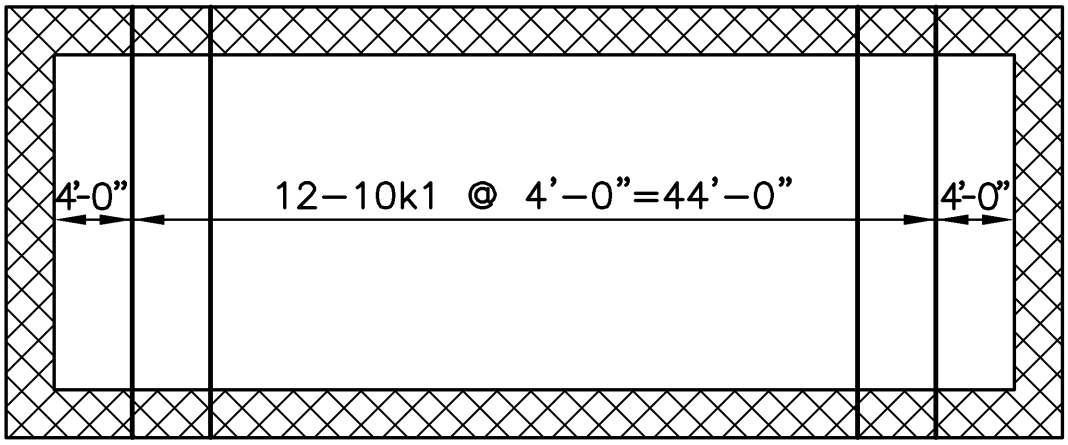

'Off-the-shelf' Materials (e.g. lumber framing): Members should be shown as one in the middle of the layout with leaders to the edges, member identification and spacing.

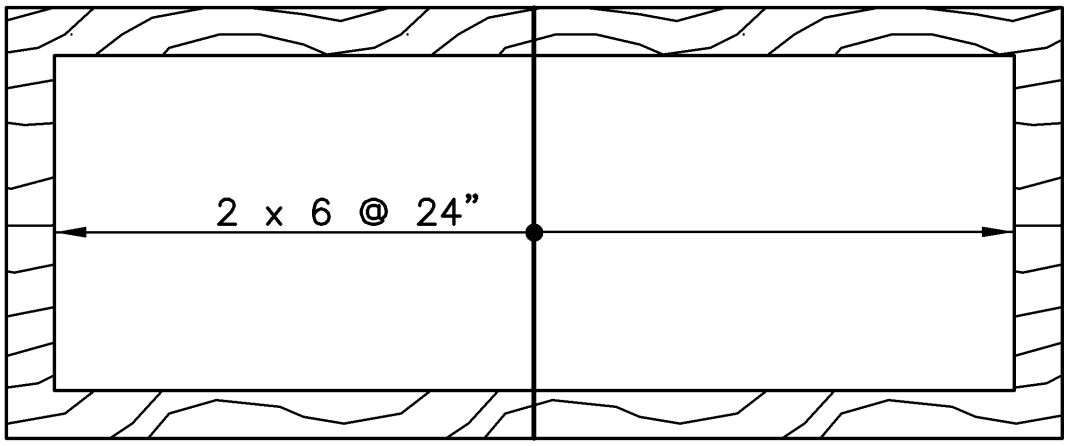

STRUCTURAL STEEL SHAPE DESIGNATIONS

DESIGNATION	TYPE OF SHAPE	DESIGNATION	TYPE OF SHAPE
PL $\frac{1}{2}$x18	PLATE	HP 14x73	HP SHAPE
L 6x6x$\frac{3}{4}$	EQUAL LEG ANGLE	C 12x20.7	AMERICAN STANDARD CHANNEL
L 6x4x$\frac{5}{8}$	UNEQUAL LEG ANGLE	MC 12x45 MC 12x10.6	MISCELLANEOUS CHANNEL
BAR 1⊡	SQUARE BAR	W 24x76 W 14x26	W SHAPE
BAR 1$\frac{1}{4}$Φ	ROUND BAR	M 8x18.5 M 10x9 M 8x34.3	M SHAPE
BAR 2$\frac{1}{2}$x$\frac{1}{2}$	FLAT BAR	MT 4x9.25 MT 5x4.5 MT 4x17.15	STRUCTURAL TEE CUT FROM M SHAPE
ST 12x50	STRUCTURAL TEE CUT FROM S SHAPE	TS 4x4x.375	STRUCT. TUBING: SQ
WT 12x38 WT 7x13	STRUCTURAL TEE CUT FROM W SHAPE	TS 5x3x.375	STRUCT. TUBING: REC.
S 24x100	S SHAPE		
PIPE 4 STD.	PIPE		
PIPE 4X-STRONG	PIPE		
PIPE 4XX-STRONG	PIPE		

STANDARD ABBREVIATIONS GIVEN IN THIS TABLE DESIGNATE ROLLED STEEL SECTIONS ON DRAWINGS THAT IDENTIFY THE SECTION GROUP WITHOUT REFERENCE TO THE MANUFACTURER.

WHEN THE LENGTH OF A ROLLED MEMBER IS GIVEN, USE FEET AND INCHES THUS: W 24x76x6'–10", OR L 2x2x$\frac{1}{2}$x1'–11$\frac{1}{2}$", OR 2–L 6x4x$\frac{1}{2}$x0'–8", OR PL $\frac{1}{2}$x10x0'–11$\frac{1}{2}$".

FOR PRACTICALLY ALL OTHER DIMENSIONS ON STRUCTURAL STEEL (EXCEPT DEPTH OF SECTIONS, PIPE DIAMETERS, HOLES, ETC.) USE FEET AND INCHES WHEN 1'–0" OR OVER, AND INCHES ONLY WHEN LESS THAN ONE FOOT: THUS 7$\frac{1}{2}$".

CHAPTER FOUR

Archival Quality

4. ARCHIVAL QUALITY

GENERAL

The National Park Service is responsible for the lifetime administration and maintenance of its buildings. Therefore, it is imperative that the material used for that documentation meets a minimum 100 year life expectancy.

The archival quality of drawings is important because various reproduction methods, such as diazo printing and wash-off photographic processes, do not produce acceptable archival products. The National Park Service will not accept as an archival product any drawing which has been prepared using a spray fixative or spray coating.

WET INK PLOTTERS AND INK JET PRINTERS

Drawing sheets produced using either wet ink plotters or ink jet printers are acceptable as long as the ink is waterproof, pigmented, is a permanent base ink, and is not diluted. Lettering and line density shall be 100% black. Drawings submitted using the wet ink process shall be printed or plotted on high quality vellum, Clearprint 1000H or approved equal, or on translucent drafting mylar with a matte face surface with a minimum thickness of.003 inch and a maximum thickness of .004 inch.

Screen patterns shall be 50% dot with no less than 85 dots per inch and no more than 120 dots per inch relative to line weights being used. Each dot shall be sharp, clear, and with a definite visual dot separation of each dot. In some cases computer generated screen patterns which use a combination of pen sizes and percentage of screen and which are produced on wet ink plotters or ink jet printers may be acceptable. Screen patterns shall be of consistent line and lettering quality vertically, horizontally, and diagonally.

USE OF PHOTOGRAPHIC REPRODUCTION

In some cases, photographic reproduction methods may be used as an effective tool in the preparation of a set of drawings. For instance, if several drawing sheets require the same base sheet information (a floor plan, for example), duplicates made by photographic techniques may be used. In all cases, the end product must meet the same archival standards as original tracings.

Photographic reproducibles shall be .004 inch thickness, polyester base matte film, and photographically developed, fixed and washed. Lettering and line work must be sharp and clear, not over or under exposed, and reversed reading. Finished product shall be free of chemical stains, dirt, wrinkles, and other visual defects that would affect the quality of reproduction. Photographic wash off or moistline eraser film will not be acceptable as a final product.

If photo art/tint screens are used on photographic mylar, the screens shall be 50% dot with no fewer than 100 dots per inch, and no more than 120 dots per inch for a standard 22"x34" sheet or with no fewer than 133 dots per inch and no more than 150 dots per inch for a half-size drawing.

When an A/E wants to use "photo drawing techniques" (for example, photos of a site or building), they must supply a high quality, half-size, photographic mylar reproducible of the photo drawing sheet, in addition to supplying the full-size original to the National Park Service. When photographs are used as information on a photographic sheet, the photos shall be screened by using a magenta or gray halftone screen with 120 dots per inch, with either conventional square dots or elliptical dots, for both standard 22"x34" drawings and for half-size drawings. The half-size reproducible must be capable of producing clear, legible prints by using the diazo or xerographic printing process.

UNACCEPTABLE PRODUCTS

Design and construction drawings produced by using computerized methods, such as impact printer plotters, electrostatic, laser, or xerography, and submitted as final products, have presented many problems and concerns. Some of the problems associated with these methods are image transfer with the stacking of drawings, image smearing, rubbing off the image with routine handling, flaking and peeling during reproduction, poor clarity of lettering and detail, uneven density, hollowing out of lettering and line work, poor image anchorage to the sheet, and quality variation over time.

Some of the problems associated with the xerographic process are documented in American Society of Testing and Materials (ASTM) Specification D-3458, "Standard Specification for Copies from Office Copying Machines for Permanent Records," or National Technical Information Service (NTIS) Publication PB90-171836, "Archival Copies of Thermofax, Verifax, and Other Unstable Records." The NTIS publication also describes the use of the tape test of dry image anchorage of the copier. (Copies of this document may be attained through the NPS Technical Information Center, Denver Service Center).

Based on the problems associated with the technology described in this section, design and construction drawings produced or reproduced by using any of the unacceptable methods noted above will not be accepted as a final archival product or as an original drawing.

CHAPTER FIVE

Construction Drawings

5. CONSTRUCTION DRAWINGS

SHEET ORDER

Each discipline's drawings should be organized in a logical sequence which agrees with the drawings of other disciplines in the drawing set. Each discipline should begin with an overview and then become more detailed. Discipline specific notes, legends, code references, and abbreviations should be located on the first sheet of each discipline. A list of abbreviations and a legend may be combined with other disciplines into an overall listing, which is shown at the beginning of the overall set of drawings in the General section.

A typical drawing set should be in the following order:

	TYPE	SUBSHEET
	Cover Sheet	
*	Index	
	General	G
	CivilC	
	Roads	
	Parking	
	Site Utilities	
	Grading Plan	
	Landscape	L
	Architectural	A
**	Structural	S
	Mechanical	M
	HVAC	
	Plumbing/Piping	
	Fire Protection	
***	Electrical	E
	Power	
	Lighting	
	Fire Detection	
	Intrusion Detection	
	Lightning Protection	

* The index should be placed on the cover sheet if possible.

** Plans of a structural set should be placed before the sections and details sheets (i.e. foundation, floor, and roof framing plans should precede any of the associated sections and details).

*** The following sequence should be used: legend and abbreviations, general notes, site plan, power plan, one line diagram, lighting plan, fire and intrusion plan, lightning protection, schedules, control wiring diagrams, and control cabinet layouts.

SUBSHEET DESIGNATION AND NUMBERING

Subsheet numbers should normally begin with the first letter of the discipline. For example, civil engineering work should begin with C, landscape design work with L, etc. If a discipline has more than one subfunction, these may have separate subsheet letters. Whole numbers should normally be used to number subsheets (for example M1, M2, etc.). If the project is divided into discrete areas, the designers may choose to use fractional subsheet numbers to differentiate the areas (for example A1.1, A2.1, etc.)

CHAPTER SIX

Drafting and Detailing References

6. DRAFTING AND DETAILING REFERENCES

The following is a list of detailing manuals that are used by the National Park Service in the preparation of drawings. The use of the latest edition of these manuals is recommended as a guideline.

STRUCTURAL

CONCRETE:	American Concrete Institute (ACI) Standard, Details and Detailing of Concrete Reinforcement, ACI 315
	ACI Detailing Manual, SP-66
STEEL:	American Institute of Steel Construction, AISC, Detailing for Steel Construction
	American Welding Society, Symbols for Welding and Nondestructive Testing, ANSI/AWS A2.4
	American Welding Society, Structural Welding Code/Steel, ANSI/AWS D1.1
TIMBER:	American Institute of Timber Construction, Timber Construction Manual, AITC 104, Typical Construction Details
MASONRY:	Reinforced Masonry Engineering Handbook, Clay and Concrete Masonry, 5th Edition, by James E. Amrhein
	Designing and Detailing Masonry, by Christine Beall
PRECAST CONCRETE:	Prestressed Concrete Institute, PCI Drafting Handbook,, MNL-119

ELECTRICAL:	ANSI Y32.2 (Graphic Symbols for Electrical and Electronic Diagrams ANSI Y32.9 (Control)

MECHANICAL:

HVAC:	ASHRAE Handbook - Fundamentals, Abbreviations and Symbols
Plumbing:	ASPE Data Book
Plumbing Fixtures:	ANSI Y32.4, Graphic Symbols for Plumbing Fixtures
Fire Sprinkler:	NFPA 170, Standard for Firesafety Symbols

APPENDIX A

General Materials Symbols

TYPICAL MATERIAL SYMBOLS

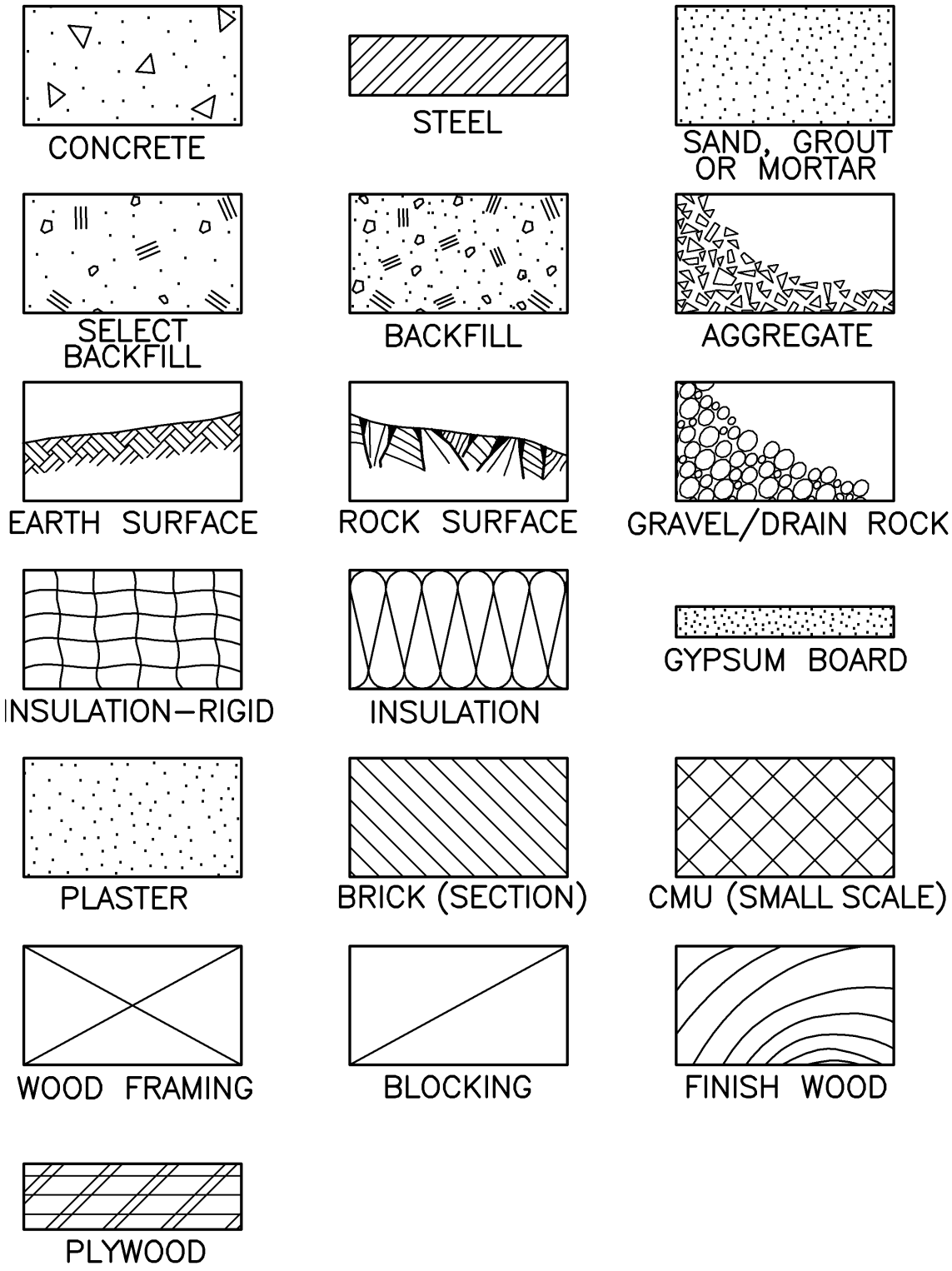

APPENDIX B

Sample Survey Sheets

Sample Survey Index Sheet
Sample Topographic Survey (Developed Area)
Sample Topographic Survey (Undeveloped Area)

LEGEND

- TREE / THICKET LINE
- AERIAL UTILITY (LABELED)
- WIRE FENCE
- RAIL FENCE
- UNDERGROUND UTILITY (UG)
- UTILITY POLE
- GAS VALVE (GV)
- TREE – SIZE – SPECIES
- LIGHT LOCATION
- POST
- CONTROL STATION
- FIRE HYDRANT
- WATER VALVE (WV)
- WATER METER (WM)
- WETLANDS AREA
- (A1) DRAWING NUMBER
- SIGN
- NAIL AND SHINER
- BBQ BARBECUE PIT
- I.P. SET IRON PIPE SET WETLANDS SURVEY

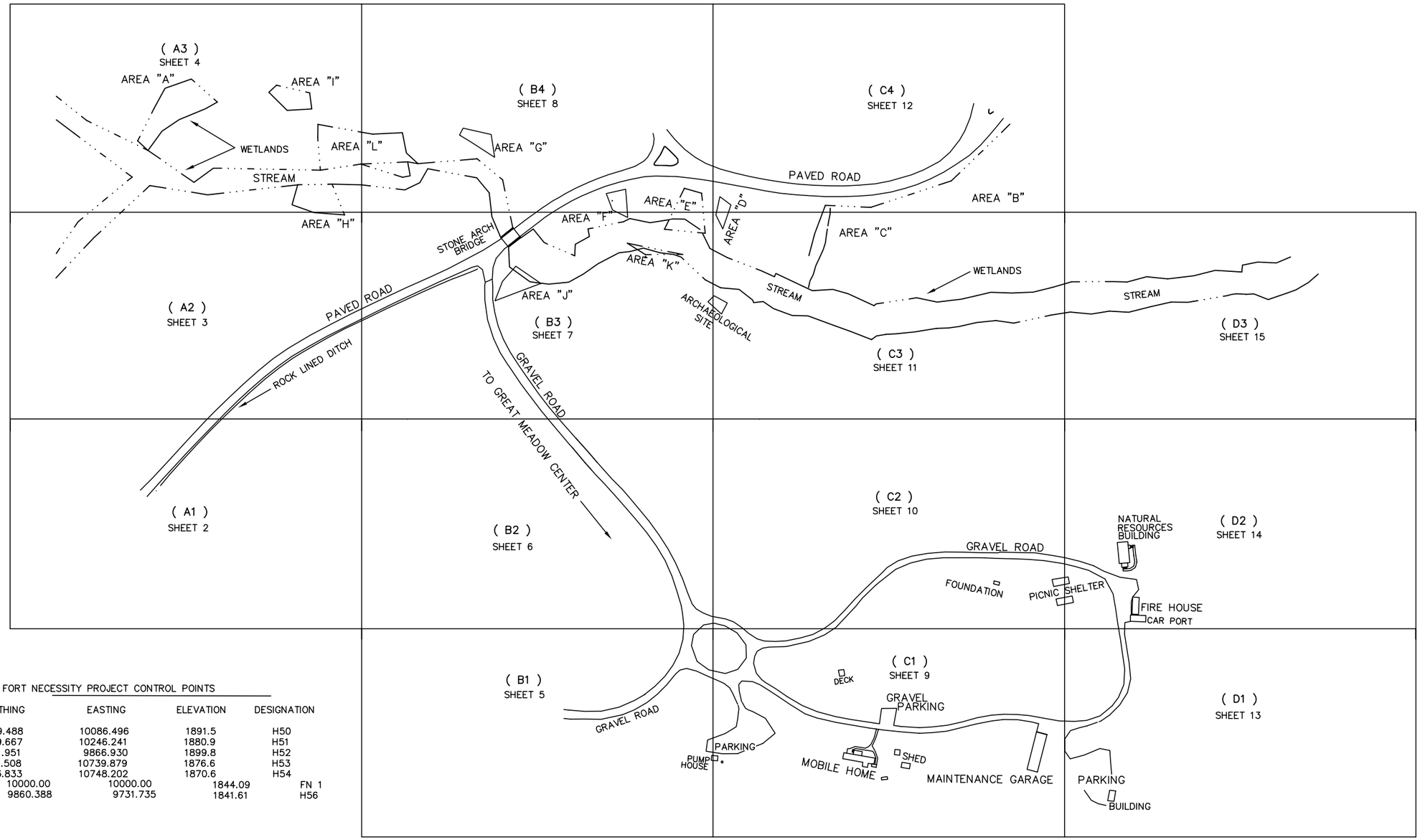

FORT NECESSITY PROJECT CONTROL POINTS

NORTHING	EASTING	ELEVATION	DESIGNATION
8989.488	10086.496	1891.5	H50
9159.667	10246.241	1880.9	H51
8901.951	9866.930	1899.8	H52
9141.508	10739.879	1876.6	H53
8933.833	10748.202	1870.6	H54
10000.00	10000.00	1844.09	FN 1
9860.388	9731.735	1841.61	H56

NOTE:

UNDERGROUND UTILITY LOCATIONS SHOWN ARE BASED UPON VARIOUS RECORD UTILITY MAPS IN CONJUNCTION WITH VISIBLE FIELD EVIDENCE GATHERED DURING THE TIME THE FIELD SURVEY WAS PERFORMED. THEREFORE, ALL UNDERGROUND UTILITY LOCATIONS SHOULD BE FIELD VERIFIED PRIOR TO CONSTRUCTION.

THIS DRAWING ONLY REFLECTS AND VERIFIES THE FIELD SURVEY DATA OF THOSE FEATURES AND CONDITIONS PRESENT AS OF _____.

REVISIONS	BY	DATE
ADDITIONAL AREAS		1/93

HORIZONTAL DATUM: LOCAL, BASED ON MONUMENTS FN1 AND FN2

VERTICAL DATUM: NGVD 1929, MONUMENT FN1 ELEV. = 1844.09'

SCALE: 1" = 100'

100 0 100 200

GRAPHIC SCALE

CONTOUR INTERVAL = 1'

UNITED STATES
DEPARTMENT OF THE INTERIOR
NATIONAL PARK SERVICE
DENVER SERVICE CENTER

A–E FIRM
NAME:
CITY, STATE:
CONTRACT NUMBER:

FIELD WORK:
DRAWN:
CHECKED:

SAMPLE
SURVEY INDEX SHEET

PKG. NO.

SHEET 99 OF 200

DRAWING NO. 999 / 41,001A

NOTES

MONUMENTS

NAME: MON. #133
DESCRIPTION:
NPS BRASS CAP
N. 1709777.61
E. 375209.81
ELEV. 1688.351

NAME: JF-22
DESCRIPTION:
NPS BRASS CAP
N. 1709670.80
E. 375750.89
ELEV. 1696.55

NAME: JF-21
DESCRIPTION:
NPS BRASS CAP
N. 1709664.44
E. 375589.09
ELEV. 1702.13

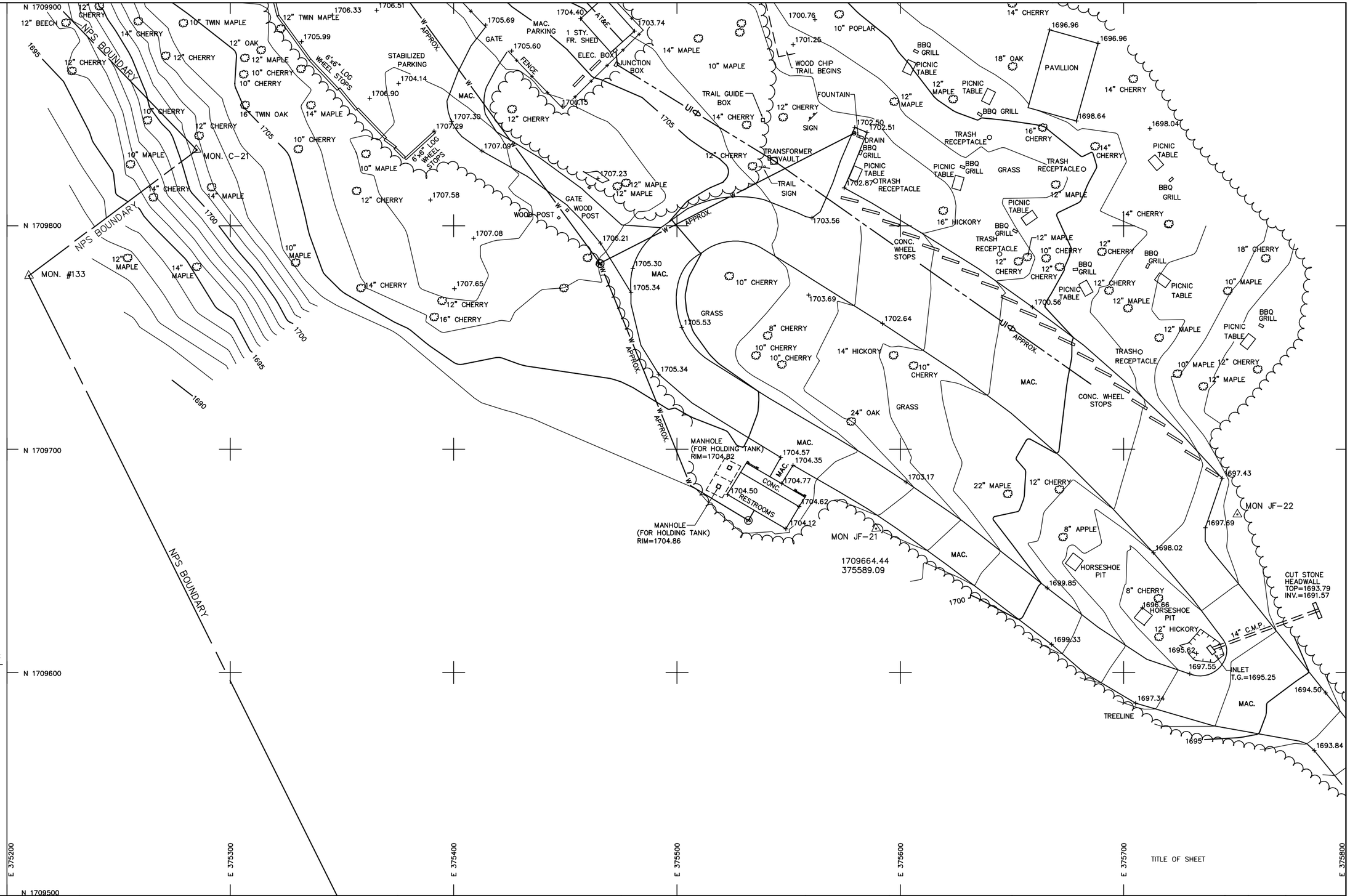

NOTES

THE SURVEY BOUNDARY LINES SHOWN HEREIN ARE ONLY A GRAPHIC APPLICATION OF THE LEGAL DESCRIPTION FOR EACH PARCEL OR RIGHT-OF-WAY TO THIS TOPOGRAPHIC MAP; THEY DO NOT, IN ANY WAY, REPRESENT AN ACTUAL BOUNDARY SURVEY AND SHOULD NOT BE RELIED UPON FOR ACCURATE BOUNDARY LOCATION.

UNDERGROUND UTILITY LOCATIONS SHOWN ARE BASED UPON VARIOUS RECORD UTILITY MAPS IN CONJUNCTION WITH VISIBLE EVIDENCE GATHERED DURING THE TIME THE FIELD SURVEY WAS PERFORMED. THEREFORE, ALL UNDERGROUND UTILITY LOCATIONS SHOULD BE FIELD VERIFIED PRIOR TO CONSTRUCTION.

THIS DRAWING ONLY REFLECTS AND VERIFIES THE FIELD SURVEY DATA OF THOSE FEATURES AND CONDITIONS PRESENT AS OF _____.

11/8/01 14:18 C.EVERMAN R15 S:\SYM\USER\NPS10\SU\SAMPLE-DEV-AREA.DWG

REVISIONS	BY	DATE

HORIZONTAL DATUM: PA SPC SOUTH ZONE (NAD 27), BASED ON EXISTING NPS BOUNDARY MONUMENTS C-21 AND #133
VERTICAL DATUM: NGVD 29, BASED ON PDH DISK Q316 (ELEV.= 1653.146 FT.)

SCALE: 1" = 20'
20 10 0 20 40 60
GRAPHIC SCALE
CONTOUR INTERVAL = 1'

UNITED STATES
DEPARTMENT OF THE INTERIOR
NATIONAL PARK SERVICE
DENVER SERVICE CENTER

A-E FIRM
NAME:
CITY, STATE:
CONTRACT NUMBER:

FIELD WORK:
DRAWN:
CHECKED:

SAMPLE
TOPOGRAPHIC SURVEY
(DEVELOPED AREA)

PKG. NO. ____
SHEET 99 OF 200
DRAWING NO. 999 / 41,001A

NOTES

MONUMENTS

NAME: GC17
DESCRIPTION: GC17, 1976
NPS BRASS CAP ON ROCK 1' HIGH
N: 1836303.96
E: 439068.63
EL: 6983.15

NAME: GC18
DESCRIPTION: GC18, 1976
NPS ALUM. CAP IN CONC., UP 0.1
LOCATED 8' SOUTH OF ROCK OUTCROP
N: 1836231.71
E: 439357.25
EL: 6976.45

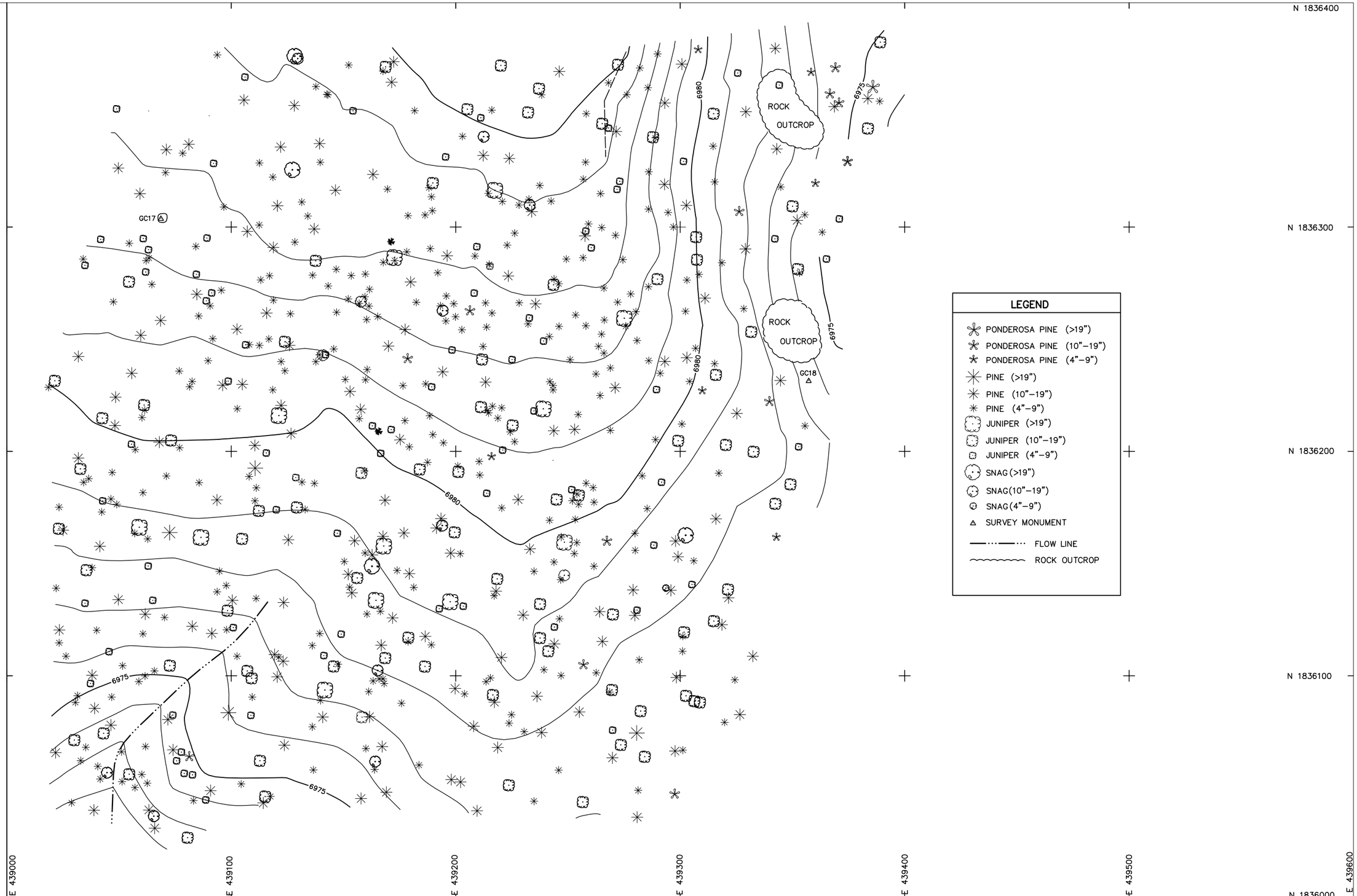

NOTES

UNDERGROUND UTILITY LOCATIONS SHOWN ARE BASED UPON VARIOUS RECORD UTILITY MAPS IN CONJUNCTION WITH VISIBLE EVIDENCE GATHERED DURING THE TIME THE FIELD SURVEY WAS PERFORMED. THEREFORE, ALL UNDERGROUND UTILITY LOCATIONS SHOULD BE FIELD VERIFIED PRIOR TO CONSTRUCTION.

THIS DRAWING ONLY REFLECTS AND VERIFIES THE FIELD SURVEY DATA OF THOSE FEATURES AND CONDITIONS PRESENT AS OF _____.

REVISIONS	BY	DATE

HORIZONTAL DATUM: NAD 1927, ARIZONA STATE PLANE COORDINATES BASED ON MONUMENTS NP12 & GC45
VERTICAL DATUM: NGVD 1929, BASED ON MONUMENT NP23

SCALE: 1" = 20'
20 0 20 40
GRAPHIC SCALE
CONTOUR INTERVAL = 1'

UNITED STATES
DEPARTMENT OF THE INTERIOR
NATIONAL PARK SERVICE
DENVER SERVICE CENTER

A–E FIRM
NAME:
CITY, STATE:
CONTRACT NUMBER:

FIELD WORK:
DRAWN:
CHECKED:

SAMPLE
TOPOGRAPHIC SURVEY
(UNDEVELOPED AREA)

PKG. NO. ____
SHEET 99 OF 200
DRAWING NO. 999 / 41,001A

11/9/01 11:35 C.EVERMAN R15 S:\SYM\USER\NPS10\SU\SAMPLE-UNDEV-AREA.DWG

APPENDIX C

Standard Abbreviations, Standard Symbols, and Sample Construction Drawings

SHEET	SUB SHEET	TITLE OF SHEET
1		SAMPLE COVER SHEET
2	G1	SAMPLE PROJECT OVERVIEW SITE PLAN
3	C1	SAMPLE ABBREVIATION SHEET
4	C2	SAMPLE SYMBOL SHEET
5	C3	SAMPLE MAPPING SYMBOLS
6	C4	SAMPLE PARKING AREA LAYOUT
7	C5	SAMPLE PARKING AREA GRADING PLAN
8	C6	SAMPLE ROAD PROFILE AND SECTIONS
9	C7	SAMPLE ROADWAY CROSS SECTIONS
10	C8	SAMPLE ROADWAY PLAN AND PROFILE
11	C9	SAMPLE WATER LINE PLAN AND PROFILE
12	C10	SAMPLE SEWER PLAN AND PROFILE
13	C11	SAMPLE STANDARD DETAILS
14	C12	SAMPLE PLAN AND DETAILS FOR ROADWAY SIGNS AND PAVEMENT MARKINGS
15	L1	SAMPLE SITE PLAN BUILDING TERRACE
16	L2	SAMPLE LANDSCAPE PLAN AND DETAILS
17	L3	SAMPLE VISITOR CENTER IRRIGATION LAYOUT
18	A1	SAMPLE FLOOR PLAN
19	A2	SAMPLE RENOVATION FLOOR PLAN
20	A3	SAMPLE ELEVATIONS
21	A4	SAMPLE SECTIONS
22	A5	SAMPLE DETAIL SHEET
23	S1	SAMPLE FOUNDATION AND FLOOR FRAMING PLAN
24	S2	SAMPLE FOUNDATION PLAN / ROOF FRAMING PLAN
25	S3	SAMPLE SECOND FLOOR FRAMING PLAN
26	S4	SAMPLE ROOF FRAMING PLAN
27	S5	SAMPLE FOUNDATION DETAILS
28	S6	SAMPLE FIRST FLOOR FRAMING SECTIONS
29	S7	SAMPLE ROOF BRACING AND DIAPHRAGM PLAN AND JOIST BEARING DETAILS

SHEET	SUB SHEET	TITLE
30	M1	SAMPLE LEGEND
31	M2	SAMPLE HVAC FLOOR PLAN
32	M3	SAMPLE HVAC SECTIONS
33	M4	SAMPLE HVAC FLOW DIAGRAMS
34	M5	SAMPLE WATER SUPPLY PLAN
35	M6	SAMPLE WASTE AND VENT PLAN
36	M7	SAMPLE WASTE AND VENT ISOMETRIC
37	M8	SAMPLE FIRE PROTECTION PLAN
38	E1	SAMPLE ELECTRICAL ABBREVIATIONS
39	E2	SAMPLE ELECTRICAL SYMBOL LEGEND
40	E3	SAMPLE ELECTRICAL AND TELEPHONE SITE PLAN, ONE LINE DIAGRAM
41	E4	SAMPLE POWER AND LIGHTING PLAN, SCHEDULES, AND CONTROL SCHEMATIC
42	E5	SAMPLE CONTROL WIRING DIAGRAM
43	E6	SAMPLE FIRE / INTRUSION ALARM, RISER DIAGRAM, AND LIGHTING PROTECTION

Note:
These drawings are a sampling of design work of all disciplines for the National Park Service. They are not meant to represent a complete set of construction drawings. Each sheet should be viewed as an individual sheet representing good design drafting practices. Section and detail bubbles, sheet numbers, subsheet numbers, etc., will not cross reference.

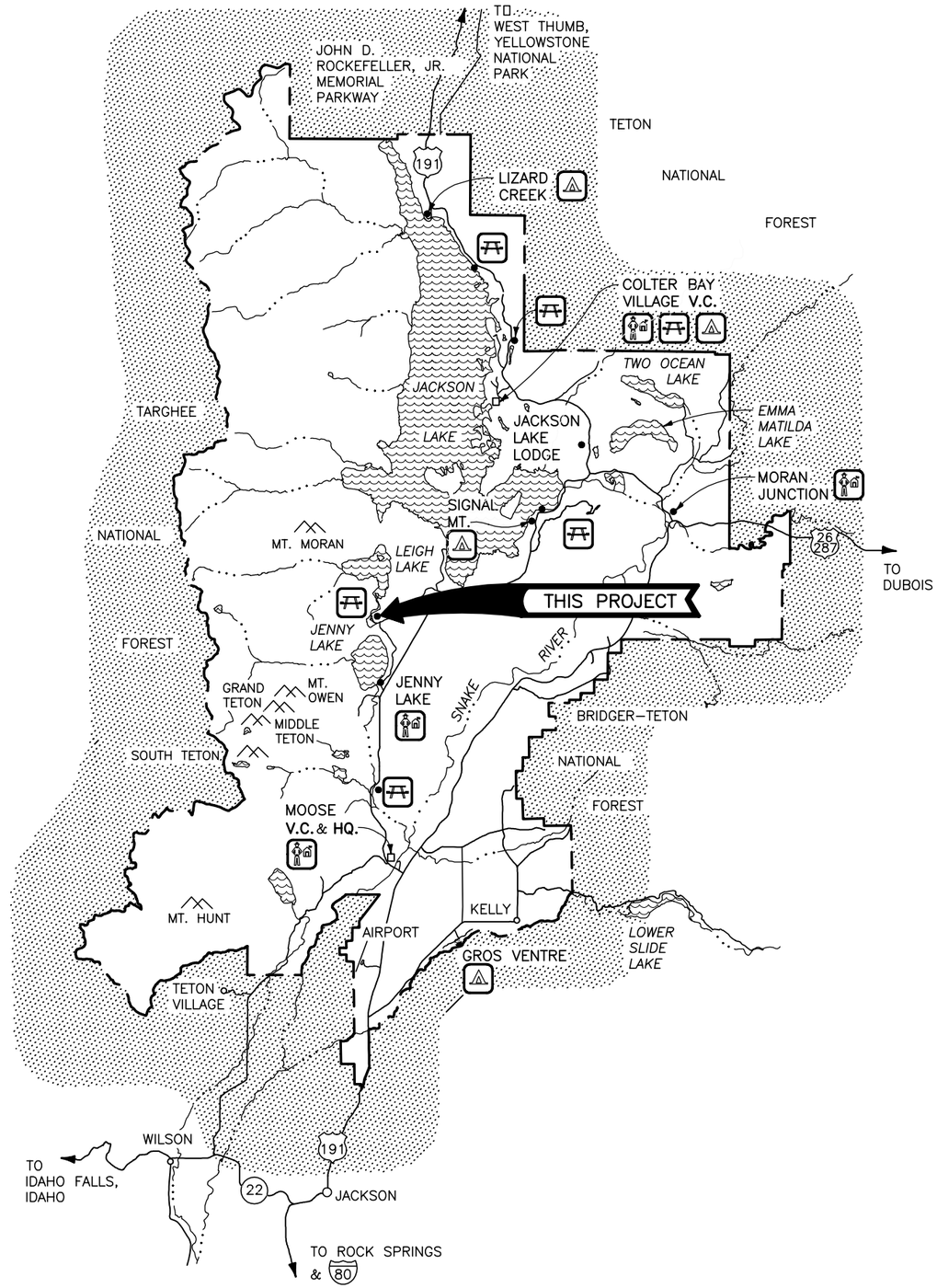

GRAND TETON NATIONAL PARK

LEGEND

- PARK BOUNDARY
- STATE LINE
- PAVED ROAD
- UNPAVED ROAD
- RIVER
- V.C. VISITOR CENTER
- HQ. PARK HEADQUARTERS
- RANGER STATION
- PICNIC AREA
- CAMPGROUND

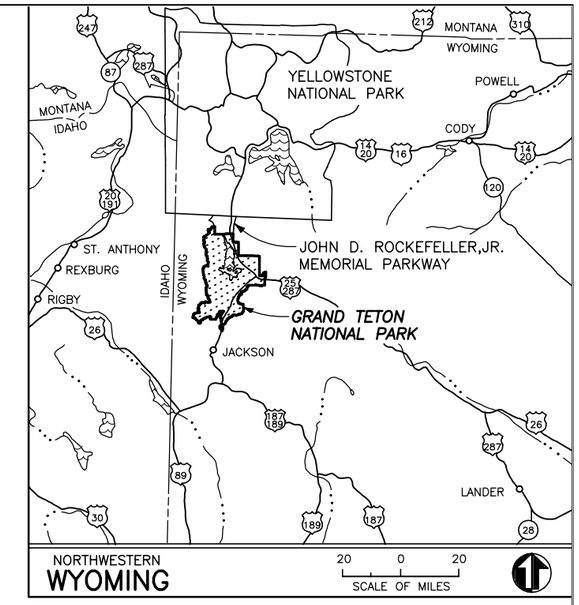

INDEX

PROJ. NO. GRTE108
1443IB160092123

SCALE OF MILES
2 0 2 4 6
2 0 2 4 6 8
SCALE OF KILOMETERS

Mark	Sheet	REVISION	Date	Initial

QUALITY DESIGN CERTIFICATION
[X] Prepared in Accordance with Design Development (Title I) _____ Drawing No.
OR
[ ] Variance from Design Development (Title I) Approved by Superintendent on _____ Date
OR
[ ] Construction Drawing Not Preceded by Design Development (Title I)
(SIGNATURE) Project Manager — 10/94 Date

CONSTRUCTION DRAWINGS
UNITED STATES
DEPARTMENT OF THE INTERIOR
NATIONAL PARK SERVICE
DENVER SERVICE CENTER

TITLE OF DRAWING
SITE IMPROVEMENTS
LOCATION WITHIN PARK
LEIGH LAKE PICNIC AREA
NAME OF PARK
GRAND TETON NATIONAL PARK

REGION	COUNTY	STATE
ROCKY MTN.	TETON	WYOMING

DRAWING NO. 999 41,001
PKG. NO. 108
SHEET 1 OF 43

BASIC DATA: U.S.G.S. TOPOGRAPHIC MAP 1968; COVER SHEET REVISED & REDRAWN 8/93.

8/16/01 17:25 C.EVERMAN R15 P:\PROJ\NPS-10\FINAL-SET\GEN\COVCONST.DWG

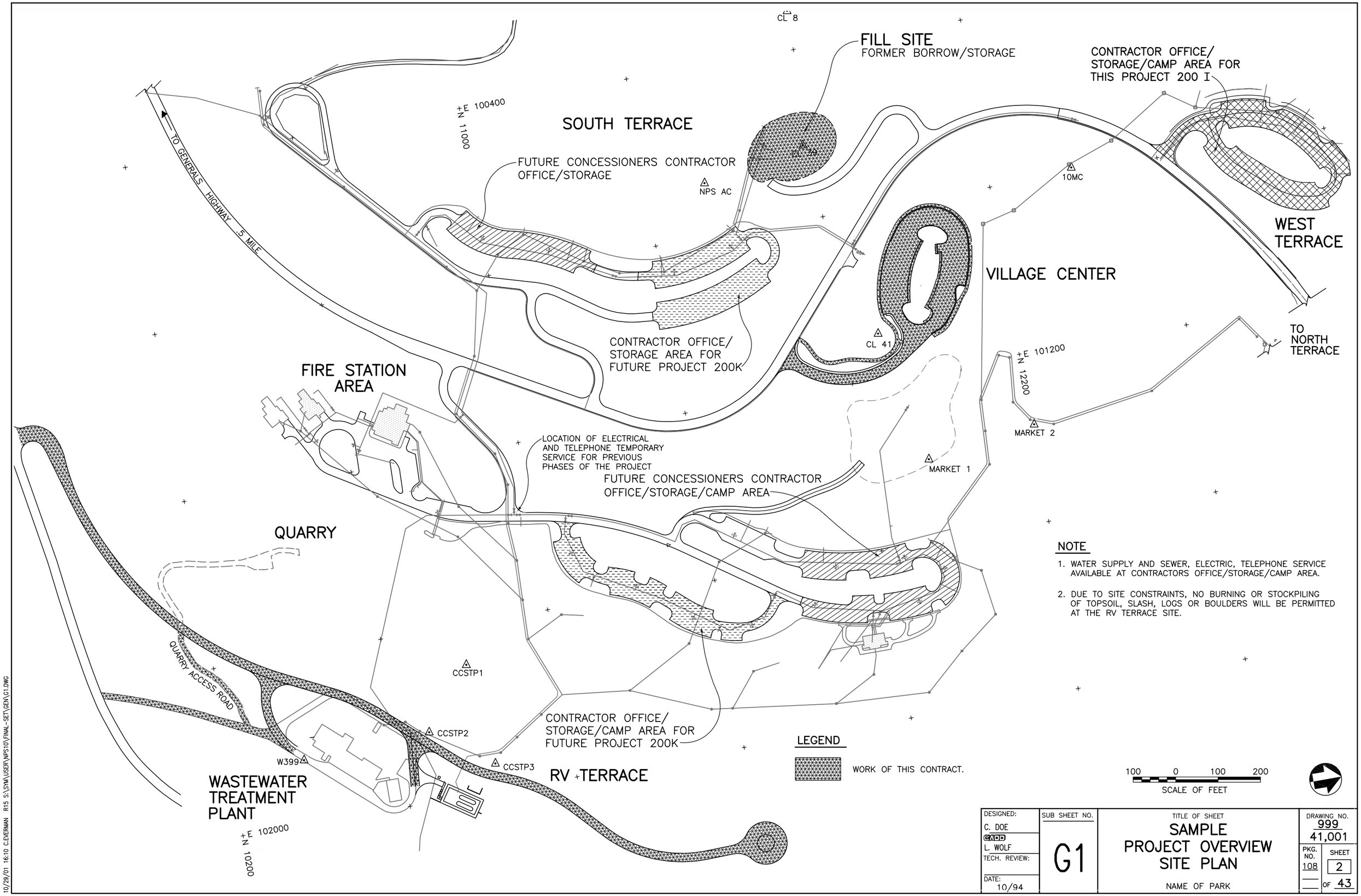

NOTE

1. WATER SUPPLY AND SEWER, ELECTRIC, TELEPHONE SERVICE AVAILABLE AT CONTRACTORS OFFICE/STORAGE/CAMP AREA.
2. DUE TO SITE CONSTRAINTS, NO BURNING OR STOCKPILING OF TOPSOIL, SLASH, LOGS OR BOULDERS WILL BE PERMITTED AT THE RV TERRACE SITE.

DESIGNED:	SUB SHEET NO.	TITLE OF SHEET	DRAWING NO.
C. DOE DADD L. WOLF TECH. REVIEW: DATE: 10/94	G1	SAMPLE PROJECT OVERVIEW SITE PLAN NAME OF PARK	999 41,001 PKG. NO. 108 SHEET 2 OF 43

10/29/01 16:10 C.EVERMAN R15 S:\SYM\USER\NPS10\FINAL-SET\GEN\G1.DWG

SITE WORK GENERAL ABBREVIATIONS

@	AT
℄	CENTER LINE
Δ	DELTA (ANGLE)
∅	DIAMETER
'	FEET
FL	FLOW LINE
"	INCHES
–	MINUS
#	NUMBER
%	PERCENT
+	PLUS
PL	PROPERTY LINE
PL	P–LINE
A	AIR
AC, ACP	ASBESTOS CEMENT (PIPE)
AC	ASBESTOS CEMENT
AC	ASPHALT CEMENT CONCRETE
AE	AERIAL TELEPHONE
AL	ALUMINUM
ARV	AIR RELIEF VALVE
ASPH	ASPHALT
AT	AERIAL TELEPHONE
B&B	BALL AND BURLAP
BC	BEGINNING OF CURVE
BC	BOTTOM OF CURB
BC	BRASS CAP
BD	BEDDING
BF	BACKFILL
BLDG	BUILDING
BM	BENCHMARK
BOL	BEGINNING OF LINE
BOT	BOTTOM
BR	BRICK
BS	BOTTOM OF SLOPE
BS	BOTTOM OF STEP
BVC	BEGINNING OF VERTICAL CURVATURE
BW	BOTTOM OF WALL
C	CHORD LENGTH
CAL	CALIPER
CATV	CABLE TELEVISION
CB	CATCH BASIN
CC	CONTROL CABLE
CF	CUBIC FEET
CI	CAST IRON
CIP	CAST IRON PIPR
CJ	CONSTRUCTION JOINT
CLG	CEILING
CLR	CLEAR
CLR	CLEARANCE
CMP	CORRUGATED METAL PIPE
CO	CLEANOUT
CO	CONTRACTING OFFICER
CONC	CONCRETE
CP	CORNER POINT
CP	CATCH POINT
CS	COMBINED SEWER
CS	COMFORT STATION
CSP	CORRUGATED STEEL PIPE
CU	COPPER
CV	CURBSTOP VALVE
CY	CUBIC YARDS
D	DELTA (ANGLE)
DBH	DIAMETER BREAST HEIGHT
DC	DEGREE OF CURVE
DET	DETAIL
DI	DROP INLET
DI	DUCTILE IRON
DIA	DIAMETER
DIP	DUCTILE IRON PIPE
DR	DRAIN
E	EAST
E	ELECTRIC
EA	EACH
EC	END OF CURVE
EJ	EXPANSION JOINT
EL	ELEVATION
EOL	END OF LINE
EP	EDGE OF PAVEMENT
ER	EDGE OF ROAD
ES	EDGE OF SHOULDER
EVC	END OF VERTICAL CURVATURE
EW	EACH WAY
EXIST	EXISTING
FDN	FOUNDATION
FF	FINISHED FLOOR (ELEVATION)
FH	FIRE HYDRANT
FL	FLOW LINE
FM	FORCE MAIN
FT	FOOT, FEET
G	GAS
GA	GAGE
GAL	GALLON
GALV	GALVANIZED
GLL	GRADING LIMIT LINE
GPH	GALLONS PER HOUR
GPM	GALLONS PER MINUTE
GS	GALVANIZED STEEL
GSP	GALVANIZED STEEL PIPE
GV	GATE VALVE
HB	HOSE BIBB
HH	HANDHOLE
HP	HIGH POINT
HP	HINGE POINT
HORIZ	HORIZONTAL
IN	INCH, INCHES
ID	INSIDE DIAMETER
INV	INVERT
IE	INVERT ELEVATION
JT	JOINT
L	LENGTH
L	LIGHTING
LB	POUND
LC	LENGTH OF CURVE
LF	LINEAR FEET
LP	LOW POINT
LPG	LIQUID PROPANE GAS
LS	LIFT STATION
LT	LEFT
M	METER
MAX	MAXIMUM
MH	MANHOLE
MIN	MINIMUM
MJ	MECHANICAL JOINT
MO	MIDDLE ORDINATE
MON	MONUMENT
N	NORTH
NIC	NOT IN CONTRACT
NPS	NATIONAL PARK SERVICE
NTE	NOT TO EXCEED
NTS	NOT TO SCALE
OC	ON CENTER
OD	OUTSIDE DIAMETER
PB	POLYBUTYLENE (PIPE)
PB	PULLBOX
PC	POINT OF CURVATURE
PCC	POINT OF COMPOUND CURVATURE
PE	PLAIN END PIPE
PE	POLYETHYLENE (PIPE)
PED	PEDESTAL
PG	PROFILE GRADE
PI	POINT OF INTERSECTION
POC	POINT ON CURVE
POL	POINT ON LINE
POT	POINT ON TANGENCY
PP	POWER POLE
PRC	POINT OF REVERSE CURVATURE
PRV	PRESSURE REGULATING VALVE
PSF	POUNDS PER SQUARE FOOT
PSI	POUNDS PER SQUARE INCH
PT	POINT OF TANGENCY
PVC	POLYVINYL CHLORIDE (PIPE)
PVCC	POINT OF VERTICAL COMPOUND CURVATURE
PVI	POINT OF VERTICAL INTERSECTION
PVRC	POINT OF VERTICAL REVERSE CURVATURE
R	RADIUS (LENGTH)
RC	REINFORCED CONCRETE
RCP	REINFORCED CONCRETE PIPE
REQ'D	REQUIRED
RP	RADIUS POINT
ROW	RIGHT OF WAY
RT	RIGHT
RW	RECLAIMED WATER
S	SEWER
S	SLOPE
S	SOUTH
SB	SELECT BACKFILL
SCH	SCHEDULE
SHT	SHEET
SP	SIGNAL POLE
SQ	SQUARE
SS	STAINLESS STEEL
ST	STORM SEWER
STA	STATION
STL	STEEL (PIPE)
STM	STEAM
T	TANGENT LENGTH
T	TELEPHONE
TRANS	TRANSFORMER
TC	TOP OF CURB
TS	TOP OF SLOPE
TS	TOP OF STEP
TS	TRENCH SCAR
TW	TOP OF WALL
TYP	TYPICAL
UE	UNDERGROUND ELECTRICAL
UT	UNDERGROUND TELEPHONE
V	VALVE
VAR	VARIES
VC	VERTICAL CURVE
VC,VCP	VITRIFIED CLAY PIPE
VERT	VERTICAL
VPC	VERTICAL POINT OF CURVATURE
VPI	VERTICAL POINT OF INTERSECTION
VPT	VERTICAL POINT OF TANGENCY
W	WATER
W	WEST
W/	WITH
WLL	WORK LIMIT LINE
W/O	WITHOUT
YH	YARD HYDRANT

NOTE

USE OF PERIODS IN ABBREVIATIONS IS OPTIONAL.

DESIGNED: C. SMITH CADD L. WOLF TECH. REVIEW: DATE: 10/94	SUB SHEET NO. C1	TITLE OF SHEET SAMPLE ABBREVIATION SHEET NAME OF PARK	DRAWING NO. 999 41,001 PKG. NO. 108 SHEET 3 OF 43

SITE WORK SYMBOLS

UTILITY LINE SYMBOLS

6"DIP W	WATERLINE WITH TYPE OF PIPE AND DIAMETER
4"DIP RW	RECLAIMED WATER LINE WITH TYPE OF PIPE AND DIAMETER
8"PVC S	GRAVITY SEWER LINE WITH TYPE OF PIPE AND DIAMETER
4"PE FM	SEWER FORCE MAIN WITH TYPE OF PIPE AND DIAMETER
18"RCP ST	STORM DRAIN WITH TYPE OF PIPE AND DIAMETER
4"PVC DR	DRAIN LINE WITH TYPE OF PIPE AND DIAMETER
2"GSP LP	LIQUIFIED PROPANE GAS LINE WITH TYPE OF PIPE AND DIAMETER
2"GSP A	AIR LINE WITH TYPE OF PIPE AND DIAMETER
4"STL F	FUEL LINE WITH TYPE OF PIPE AND DIAMETER
AE	AERIAL (OVERHEAD) ELECTRICAL
UE	UNDERGROUND ELECTRICAL
AT	AERIAL (OVERHEAD) TELEPHONE
UT	UNDERGROUND TELEPHONE
AT & E	AERIAL TELEPHONE AND ELECTRIC
UT & E	UNDERGROUND TELEPHONE AND ELECTRIC

NEW VERSUS EXISTING UTILITY LINES

6"DIP W	WATER LINE WITH TYPE OF PIPE AND DIAMETER
6"DIP W	EXISTING WATER LINE WITH TYPE OF PIPE AND DIAMETER

UTILITY LINES (SURVEYS)

6"DIP RW	(EXISTING) RECLAIMED WATER LINE WITH TYPE OF PIPE AND DIAMETER

TYPE OF PIPE

TYPE OF PIPE MAY BE DELETED IF CLEARLY SPECIFIED (NEW PIPE) OR IF UNDETERMINABLE (EXISTING PIPE)

6"W	WATER LINE WITH DIAMETER
6"RW	EXISTING RECLAIMED WATER LINE WITH DIAMETER

ABANDONED UTILITY LINES

4"CIP S	EXISTING UTILITY (ABANDONED)
4"CIP S	EXISTING UTILITY TO BE ABANDONED
18"RCP ST	EXISTING UTILITY TO BE REMOVED

UTILITIES WITH DIFFERENT SYMBOLS FOR NEW AND EXISTING

- FIRE HYDRANT
- EXISTING FIRE HYDRANT
- YARD HYDRANT
- EXISTING YARD HYDRANT
- VALVE
- EXISTING VALVE
- CLEANOUT
- EXISTING CLEANOUT
- MANHOLE
- EXISTING MANHOLE

CONTOURS

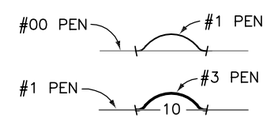

EXISTING/NEW INTERMEDIATE CONTOUR (EXISTING–SOLID, NEW–SOLID)

EXISTING/NEW INDEX CONTOUR (EXISTING–SOLID, NEW–SOLID)

STATIONING

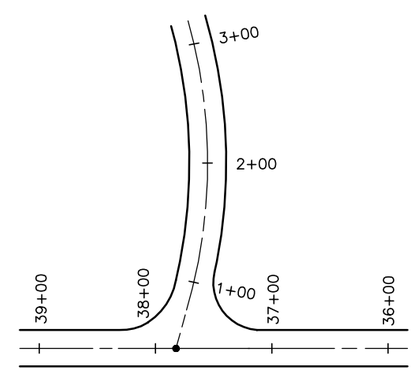

STATION LABELING SHOULD BE PLACED ON THE RIGHT SIDE OF ALIGNMENTS, WHENEVER POSSIBLE, RELATIVE TO THE DIRECTION OF INCREASING STATIONING, OFTEN REFERRED TO AS THE CONSTRUCTION LAYOUT DIRECTION OF AN ALIGNMENT, SEE ABOVE ROAD EXAMPLE. REFERENCE TO DIRECTION LEFT OR RIGHT OF A PARTICULAR ALIGNMENT ALWAYS APPLIES TO THE INCREASING STATIONING DIRECTION OF AN ALIGNMENT.

OTHER SYMBOLS

- METER
- REDUCER
- PLUGGED OR CAPPED LINE
- SCREENED END

ELECTRICAL SITE WORK SYMBOLS

- POLE MOUNTED TRANSFORMER
- T — PAD MOUNTED TRANSFORMER
- PB 1 — PULLBOX, 1 INDICATES PULLBOX NUMBER
- MH — ELECTRICAL MANHOLE
- SB — SPLICE BOX
- GUY WIRE

SLOPES AND BATTERS

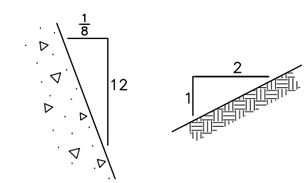

EXPRESS SLOPES AND BATTERS AS THE RATIO OF THE HORIZONTAL RUN TO THE VERTICAL RISE. (FOR EXAMPLE: 2:1)

SLOPES IN PLAN VIEW

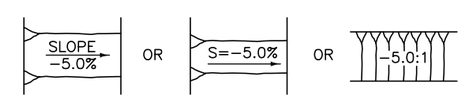

PLAN PLAN PLAN

NOTE

FOR UTILITY LINE TYPES NOT SHOWN, USE SIMILIAR LINE SYMBOLOGY TO EXAMPLES SHOWN.

DESIGNER NOTE

LEGEND SHEET SHOULD INCLUDE ONLY SYMBOLS USED ON EACH SPECIFIC PROJECT.

DESIGNED: C. DOE CADD L. WOLF TECH. REVIEW: DATE: 10/94	SUB SHEET NO. C2	TITLE OF SHEET SAMPLE SYMBOL SHEET NAME OF PARK	DRAWING NO. 999 41,001 PKG. NO. 108 SHEET 4 OF 43

OTHER SITE WORK AND MAPPING SYMBOLS

- PARK BOUNDARY
- INTERNATIONAL BOUNDARY
- STATE LINE
- COUNTY LINE
- RESERVATION LINE
- LAND GRANT LINE
- CITY BOUNDARY (LARGE)
- TOWNSHIP LINE
- SECTION LINE
- BASIN BOUNDARY OR RIGHT OF WAY BOUNDARY
- CONSTRUCTION LIMIT LINE
- PROPERTY LINE (METES AND BOUNDS)
- FLOW LINE
- EDGE OF WATER
- WOVEN WIRE FENCE
- BARBED WIRE FENCE
- CHAIN LINK FENCE/HANDRAIL
- WOODEN FENCE
- GUARDRAIL/PORCH RAILING
- TS — TS — TRENCH SCAR
- E — E — EROSION
- TREE LINE, LIMIT OR BOUNDARY
- SHRUB LINE, LIMIT OR BOUNDARY
- ROCK OUTCROP
- DIRT PILE
- RIPRAP BOULDER FIELD OR ROCK PILE
- ROCK OR STONE WALL
- 5220 — INDEX CONTOUR #1 PEN
- INTERMEDIATE CONTOUR #00 PEN INTERMEDIATE CONTOURS MAY BE SHOWN DASHED TO CLARIFY DESIGN INTENT
- DEPRESSION CONTOURS OR BORROW AREA

- STREAM OR DRAINAGE DITCH #0 PEN
- TRAIL #1 PEN
- SOIL BORING
- PROPERTY CORNER
- HANDICAP RAMP
- (OR) — SIGN
- × 123.45 — SPOT ELEVATION (EXISTING) ("x" INDICATES SPOT)
- + 123.45 — SPOT ELEVATION (NEW) ("+" INDICATES SPOT)
- MARSH OR SWAMP
- MEADOW OR GRASS
- 18" S — SIZE AND TYPE OF TREE
- BENCHMARK OR MONUMENT
- N 350000 / E 675000 — COORDINATES SHOWN WITH A "+" EVERY 500 OR 1000 FEET DEPENDING ON SCALE OF DRAWING. AT LEAST 3 POINTS NEED TO BE LABELED AND SHOWN.
- PAVED ROAD
- UNIMPROVED ROAD, PATH OR WALK
- CULVERT WITH FLARED END SECTIONS
- 106 — BUILDING WITH BUILDING NUMBER
- STREET LIGHT
- SP — SIGNAL POLE
- PP — POWER POLE OR TELEPHONE POLE
- PICNIC TABLE
- TC — TRASH CAN
- BBQ — BARBECUE (FIRE PITS)
- FP — FLAGPOLE
- RIPRAP
- STONE CURB
- DRY STONE WALL

SYMBOLS SPECIFIC TO SMALL SCALE MAPPING

- 110 OR STATE 110 — STATE HIGHWAY SYSTEM
- 85 OR U.S. 85 — U.S. HIGHWAY SYSTEM
- 70 — INTERSTATE HIGHWAY
- BRIDGE
- CULVERT
- HEADWALL
- TUNNEL
- FENCE
- RAILROAD
- RAILROAD (DOUBLE TRACK)
- CEM — CEMETERY
- CHURCH
- SCHOOL
- RIVER
- SPRING
- CANAL
- RESERVOIR OR LAKE

UTILITIES IN PLAN (SURVEYS)

8" CIP W — TP=8.00 — MH 4'x4' RIM=11.23 CLG=10.98 BOT=4.98

8" DIAMETER CAST IRON WATER LINE WITH 4'x4' MANHOLE HAVING RIM ELEVATION = 11.23, CEILING ELEVATION = 10.98, FLOOR ELEVATION = 4.98, AND TOP OF PIPE = 8.00

18" CMP ST — INV=4.52 — MH I.D.=6'-0" RIM=11.23 — INV=4.56

18" DIAMETER CORRUGATED METAL PIPE STORM SEWER WITH 6'-0" INSIDE DIAMETER MANHOLE HAVING RIM ELEVATION = 11.23, INLET INVERT ELEVATION = 4.56 OUTLET INVERT ELEVATION = 4.52

AE & AT — GUY — PP

AERIAL ELECTRIC AND AERIAL TELEPHONE LINES STRUNG ACROSS A GUY SUPPORTED UTILITY POLE.

DESIGNER NOTE

LEGEND SHEET SHOULD INCLUDE ONLY SYMBOLS USED ON EACH SPECIFIC PROJECT.

DESIGNED: C. SMITH	SUB SHEET NO.	TITLE OF SHEET	DRAWING NO. 999 41,001
CADD L. WOLF	C3	SAMPLE MAPPING SYMBOLS	PKG. NO. 108
TECH. REVIEW:			SHEET 5 OF 43
DATE: 10/94		NAME OF PARK	

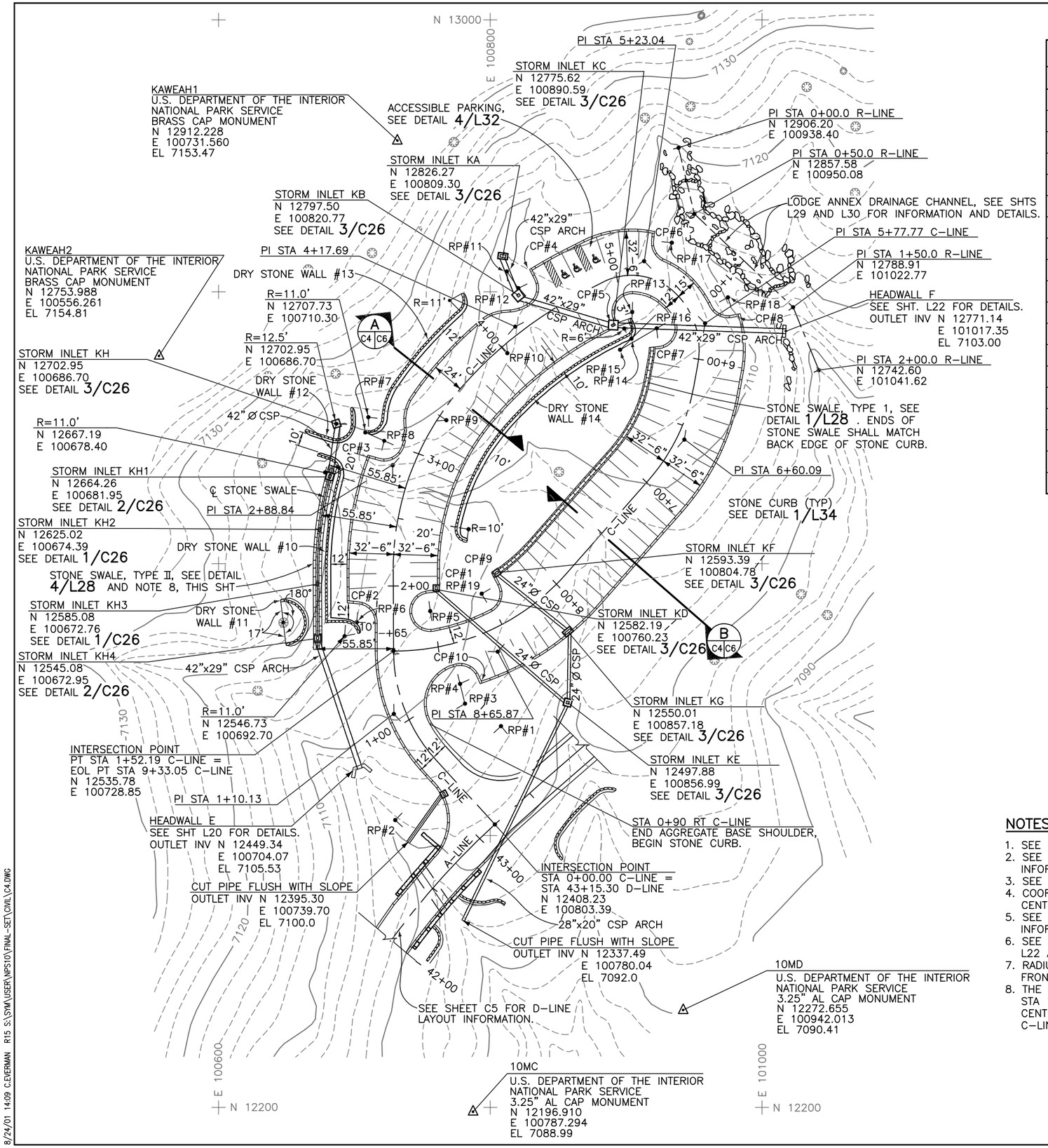

C-LINE CURVE LAYOUT TABLE

STATION	NORTHING	EASTING	RADIUS	DELTA	LENGTH	TANGENT	DEGREE OF CURVE
PC STA 0+63.85	12455.35	100760.30					
PI STA 1+10.13	12489.50	100729.07	120.00	42-10-36.9	88.33	46.28	47-44-47.3
PT STA 1+52.19	12535.78	100728.85					
PC STA 2+11.06	12594.64	100728.57					
PI STA 2+88.84	12672.43	100728.21	204.15	41-42-56.1	148.63	77.78	28-03-58.1
PCC STA 3+59.69	12730.73	100779.70					
PI STA 4+17.69	12774.20	100818.09	303.96	21-36-22.3	114.62	58.00	18-50-59.7
PT STA 4+74.31	12800.49	100869.79					
PC STA 4+88.95	12807.12	100882.84					
PI STA 5+23.04	12822.57	100913.23	46.48	72-30-07.1	58.82	34.08	123-15-42.4
PCC STA 5+47.77	12798.24	100937.09					
PI STA 5+77.77	12776.82	100958.10	58.12	54-35-58.9	55.39	30.00	98-34-28.3
PT STA 6+03.16	12747.29	100952.81					
PC STA 6+20.09	12730.63	100949.83					
PI STA 6+60.09	12691.26	100942.78	143.24	31-12-19.6	78.01	40.00	40-00-01.8
PT STA 6+98.10	12661.23	100916.34					
PC STA 7+89.24	12592.83	100856.12					
PI STA 8+65.87	12535.31	100805.48	168.20	48-59-20.4	143.81	76.63	34-03-53.2
PT STA 9+33.05	12535.78	100728.85					

CORNER POINT TABLE

CP#	NORTHING	EASTING
1	12580.81	100761.14
2	12572.63	100696.18
3	12678.08	100710.91
4	12815.89	100830.89
5	12775.45	100892.25
6	12843.17	100919.26
7	12757.94	100921.22
8	12782.12	100982.82
9	12590.37	100804.09
10	12513.59	100793.41

CORNER POINTS ARE LOCATED AT ASPHALT CONCRETE PAVEMENT CORNERS ADJACENT TO THE STONE CURBING AND/OR STONE SWALE.

RADIUS POINT TABLE

RP#	NORTHING	EASTING	RADIUS
1	12480.55	100807.72	40
2	12411.40	100730.03	40
3	12497.10	100781.43	30
4	12511.66	100777.81	15
5	12565.16	100755.71	15
6	12557.03	100701.75	15
7	12696.69	100708.29	30
8	12690.53	100721.96	15
9	12705.49	100767.84	30
10	12754.91	100812.64	30
11	12815.05	100812.17	30
12	12802.67	100820.64	15
13	12785.16	100904.57	15
14	12765.69	100903.91	34.48
15	12757.54	100895.60	46.12
16	12773.19	100922.50	15
17	12836.15	100933.65	15
18	12795.95	100974.91	15
19	12577.98	100793.62	15

RADIUS IS TO EDGE OF PAVEMENT OR FACE INVERT OF STONE CURB WHICHEVER IS APPLICABLE.

NOTES

1. SEE SHEET C3 FOR C-LINE PROFILE AND SECTIONS.
2. SEE SHEET C2 FOR FINISH GRADING AND ADDITIONAL LAYOUT INFORMATION.
3. SEE SHEETS U2 AND U3 FOR UTILITY WORK WITHIN THIS AREA.
4. COORDINATES GIVEN FOR ALL STORM INLETS ARE FOR CENTER OF GRATE.
5. SEE SHEETS C26 AND C27 FOR STORM DRAINAGE LAYOUT INFORMATION AND DETAILS.
6. SEE SHEET L21 FOR DRY STONE WALL DETAILS AND SHEETS L22 AND L23 FOR DRY STONE WALL ELEVATION VIEWS.
7. RADIUS DIMENSIONS FOR DRY STONE WALLS ARE TO THE FRONT FACE TOP EDGE.
8. THE STONE SWALE ABOVE DRY STONE WALL #10 BEGINS AT STA 1+53.76 LT AND ENDS AT STA 2+72.86 LT THE CENTER LINE OF THE STONE SWALE RUNS PARALLEL TO C-LINE CENTER LINE, 55.85' LEFT.

40 0 40 80
SCALE OF FEET

DESIGNED: D. DOE	SUB SHEET NO.	TITLE OF SHEET	DRAWING NO. 999 41,001
CADD L. WOLF	C4	SAMPLE PARKING AREA LAYOUT	PKG. NO. 108 / SHEET 6
TECH. REVIEW:		NAME OF PARK	OF 43
DATE: 10/94			

8/24/01 14:09 C.EVERMAN R15 S:\SYM\USER\NPS10\FINAL-SET\CIVIL\C4.DWG

NOTE
WORK LIMIT LINE AND GRADING LIMIT LINE COINCIDE IN SOME AREAS

DRY STONE WALL #12
42" Ø CSP
DRY STONE WALL #13
DRY STONE WALL #10
STONE SWALE, TYPE 2, SEE DETAIL 1/L28
DRY STONE WALL #11
16'x16' TREE PROTECTION TYPICAL
INTERSECTION POINT
PT STA 1+52.16 C-LINE =
EOL PT STA 9+33.05 C-LINE
ACCESSIBLE PARKING PLAN SEE DETAIL 5/L28
TC 20.3
BC 19.8
HP 19.46
TC 18.70
BC 18.20
BW 11.2
BW 9.5
DRY STONE WALL #14
DRY STONE WALL (TYP), SEE DETAIL 4/L21
16'x16' TREE PROTECTION
STONE SWALE, TYPE 1, SEE DETAIL 3/L28
LODGE ANNEX DRAINAGE CHANNEL, SEE SHT L29 FOR INFORMATION AND DETAILS
HEADWALL F SEE SHT L22 FOR DETAILS
CURB TREATMENT AT PARKING AREAS SEE DETAIL 2/L34
HEADWALL E SEE SHT L20 FOR DETAILS
HEADWALL A SEE SHT L15 FOR DETAILS
STONE CURB (TYP) SEE DETAIL 6/L34
SEE SHEETS C9 AND C10 FOR D-LINE GRADING INFORMATION
07.57
102.75
C-LINE
A-LINE
WLL
WLL AND GLL
GLL
WLL AND GLL
DRY STONE WALL #1
DRY STONE WALL #2
DRY STONE WALL #3
INTERSECTION POINT
STA 0+00.00 C-LINE =
STA 43+15.30 D-LINE
HEADWALL B SEE SHTS L16 AND L17 FOR DETAILS

NOTES

1. SEE SHEET C1 FOR C-LINE LAYOUT INFORMATION.
2. SEE SHEETS U2 AND U3 FOR UTILITY WORK WITHIN THIS AREA.
3. SEE SHEETS C26 AND C27 FOR STORM DRAINAGE LAYOUT INFORMATION AND DETAILS
4. SEE SHEET L21 FOR DRY STONE WALL DETAIL AND SHEETS L21, L22 AND L23 FOR DRY STONE WALL ELEVATION VIEWS.

20 0 20 40
SCALE OF FEET

DESIGNED: D. DOE CADD V. SINGSON TECH. REVIEW: DATE: 10/94	SUB SHEET NO. C5	TITLE OF SHEET SAMPLE PARKING AREA GRADING PLAN NAME OF PARK	DRAWING NO. 999 41,001 PKG. NO. 108 SHEET 7 OF 43

8/24/01 10:33 C:EVERMAN R15 S:\SYM\USER\NPS10\FINAL-SET\CIVIL\C5.DWG

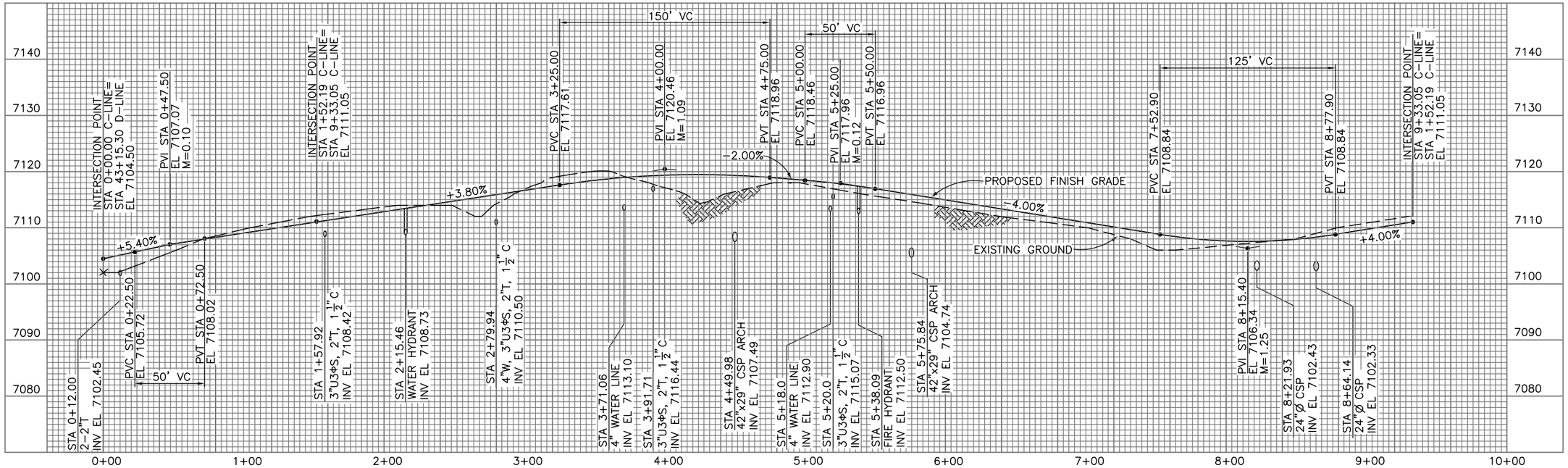

C-LINE PROFILE

SCALE (A)

NOTES

1. SEE SHEET C1 FOR C-LINE LAYOUT INFORMATION.
2. SEE SHEET C2 FOR FINISH GRADING AND ADDITIONAL LAYOUT INFORMATION.
3. SEE SHEETS U2 AND U3 FOR UTILITY WORK WITHIN THIS AREA.
4. SEE SHEETS C26 AND C27 FOR STORM DRAINAGE LAYOUT INFORMATION AND DETAILS.
5. UTILITY CROSSINGS NOT SHOWN ON PROFILE INCLUDE IRRIGATION SERVICE LINES, IRRIGATION SLEEVES, AND LIGHTING CONDUITS IN SINGLE TRENCH.

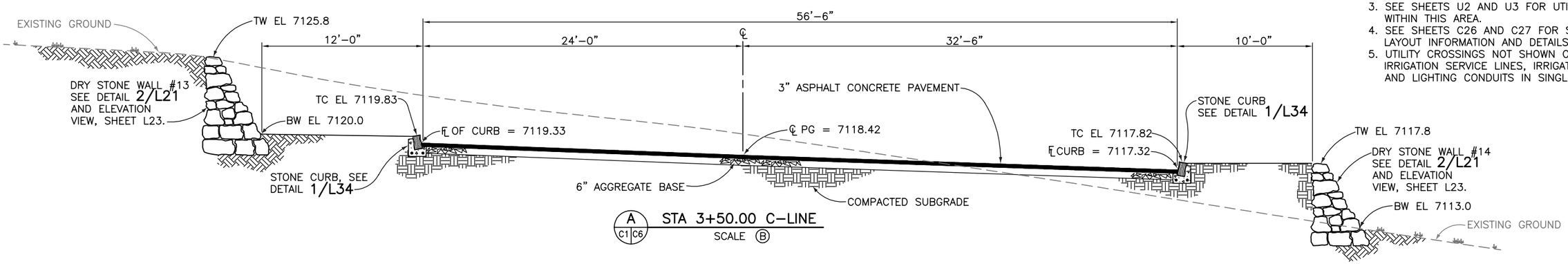

A C1 C6 STA 3+50.00 C-LINE

SCALE (B)

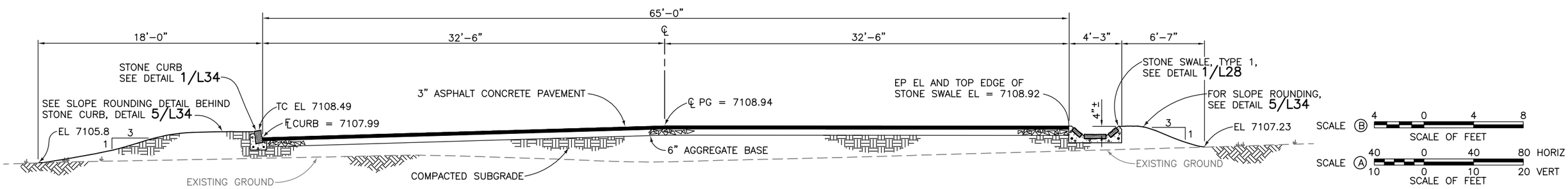

B C1 C6 STA 7+50.00 C-LINE

SCALE (B)

DESIGNED: B. HENRY	SUB SHEET NO.	TITLE OF SHEET	DRAWING NO. 999 41,001
CADD L. WOLF	C6	SAMPLE ROAD PROFILE AND SECTIONS	PKG. NO. 108
TECH. REVIEW:			SHEET 8 OF 43
DATE: 10/94		NAME OF PARK	

8/24/01 11:07 C.EVERMAN R15 S:\SYM\USER\WPS10\FINAL-SET\CIVIL\C6.DWG

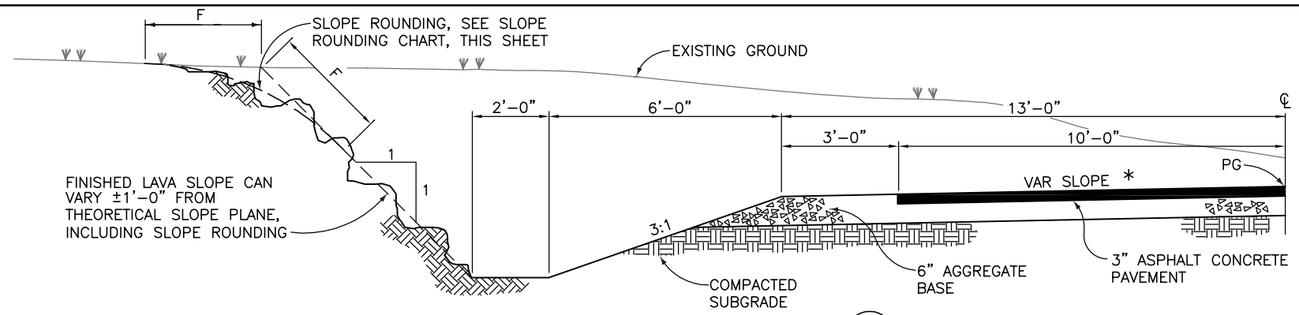

A C7 SECTION A–LINE

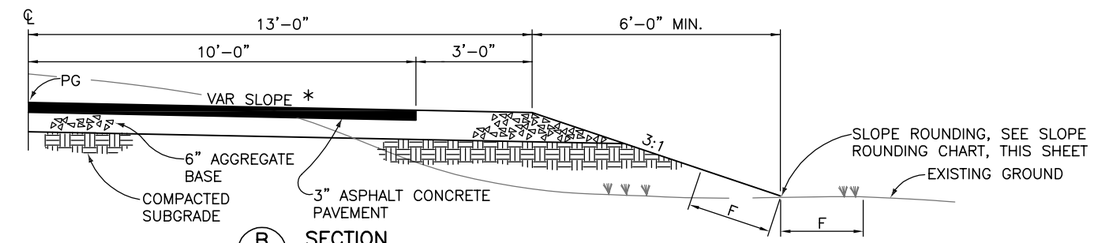

B C7 SECTION A–LINE

AGGREGATE BASE SHALL BE 1'–8" IN DEPTH FROM STA 0+11.11 TO STA 0+35.00

SECTION TABLE	
A–LINE	
STATIONING FOR SECTIONS LEFT OF CENTER LINE	SECTION
STA 0+11.11 TO STA 3+62	C
STA 3+62 TO STA 5+19	A
STA 5+19 TO STA 6+24	C
STA 6+24 TO STA 7+63	A
STA 7+63 TO STA 10+25	C
STA 10+25 TO STA 10+98	A
STA 10+98 TO STA 13+33	C
STA 13+33 TO STA 19+04.33	A
STATIONING FOR SECTIONS RIGHT OF CENTER LINE	SECTION
STA 0+11.11 TO STA 3+85	B
STA 3+85 TO STA 5+00	D
STA 5+00 TO STA 6+30	B
STA 6+30 TO STA 7+50	D
STA 7+50 TO STA 8+85	B
STA 8+85 TO STA 10+65	D
STA 10+65 TO STA 13+45	B
STA 13+45 TO STA 19+04.33	D
B–LINE	
STATIONING FOR SECTIONS LEFT OF CENTER LINE	SECTION
STA 0+00 TO STA 2+25	E
STATIONING FOR SECTIONS RIGHT OF CENTER LINE	SECTION
STA 0+00 TO STA 2+25	F

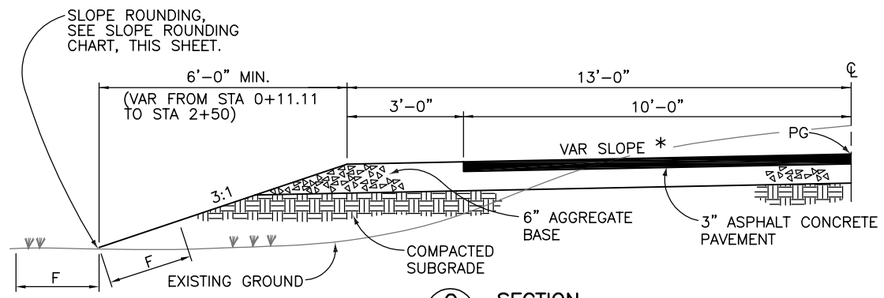

C C7 SECTION A–LINE

AGGREGATE BASE SHALL BE 1'–8" IN DEPTH FROM STA 0+11.11 TO STA 0+35.00

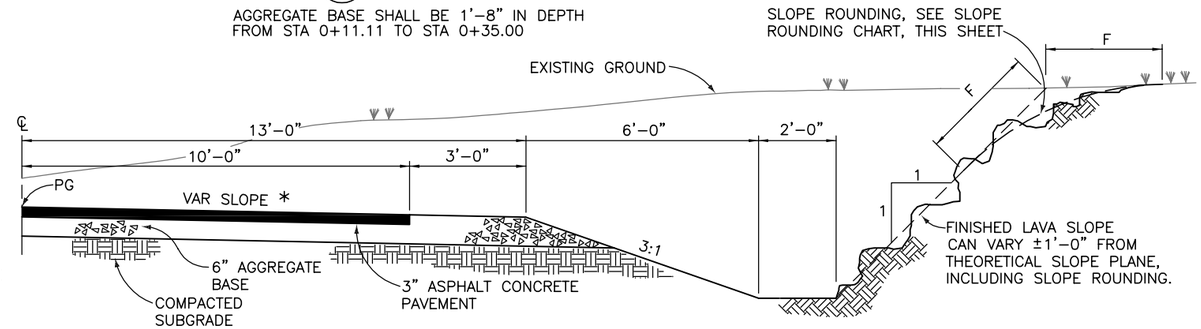

D C7 SECTION A–LINE

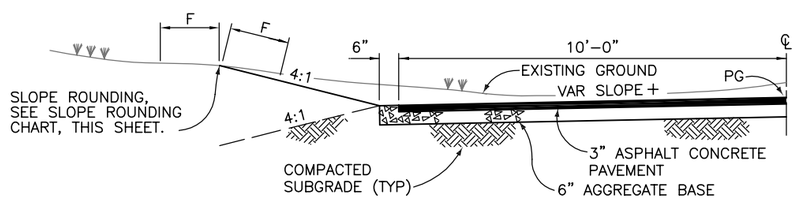

E C7 SECTION B–LINE

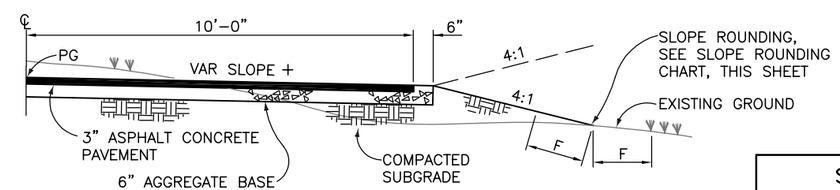

F C7 SECTION B–LINE

SLOPE ROUNDING CHART					
FILL	SLOPE	F	CUT	SLOPE	F
0'–2'	3:1 OR 4:1	1'	0'–2'	1:1 OR 4:1	2'
2'–4'	3:1 OR 4:1	2'	2'–4'	1:1 OR 4:1	3'
4'–6'	3:1 OR 4:1	3'	4'–6'	1:1 OR 4:1	3'
6'–10'	3:1	4'	6'–10'	1:1	4'
OVER 10'	3:1	5'	10'–14'	1:1	5'
			OVER 14'	1:1	6'

* FOR A–LINE CROSS SLOPE INFORMATION SEE A–LINE SUPERELEVATION DIAGRAM ON SHEETS C2 AND C3.

\+ FOR B–LINE CROSS SLOPE INFORMATION SEE B–LINE SUPERELEVATION NOTES ON SHEET C2.

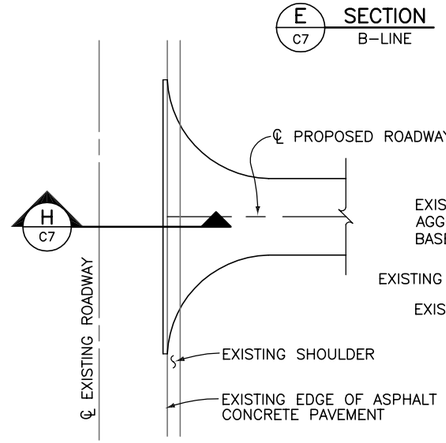

G C2 C7 C3 PLAN

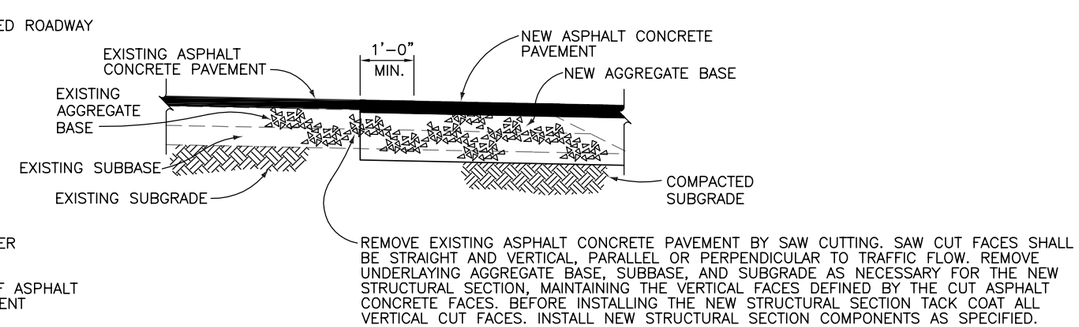

H C7 SECTION

TYPICAL PAVEMENT CONNECTION DETAIL

2 0 2 4
SCALE OF FEET

NOTES

1. THE ABOVE TABLE DOES NOT COMPENSATE FOR INTERSECTION AND DRAINAGE STRUCTURE VARIABILITY. SEE SHEETS C2 AND C3 FOR INTERSECTION AND DRAINAGE STRUCTURE LAYOUTS.
2. TWENTY FEET TRANSITIONS SHALL BE PROVIDED, WHEREVER APPLICABLE, AT LOCATIONS WHERE ONE TYPICAL CROSS SECTION ENDS AND ANOTHER TYPICAL CROSS SECTION BEGINS.
3. STARTING AND ENDING STATIONS FOR TYPICAL CROSS SECTIONS SHALL BE FIELD ADJUSTED.
4. SEE SHEETS C5 THROUGH C9 FOR 50' A–LINE CROSS SECTIONS.

DESIGNED: B. HENRY	SUB SHEET NO.	TITLE OF SHEET	DRAWING NO. 999 41,001
CADD J. BENDORF	C7	SAMPLE ROADWAY CROSS SECTIONS	PKG. NO. 108
TECH. REVIEW:			SHEET 9 OF 43
DATE: 10/94		NAME OF PARK	

RADIUS POINT TABLE			
RP#	NORTHING	EASTING	RADIUS
1	434572.31	390089.38	90'
2	434703.00	389997.07	50'
3	434670.20	389967.02	40'
4	434612.52	389885.32	40'

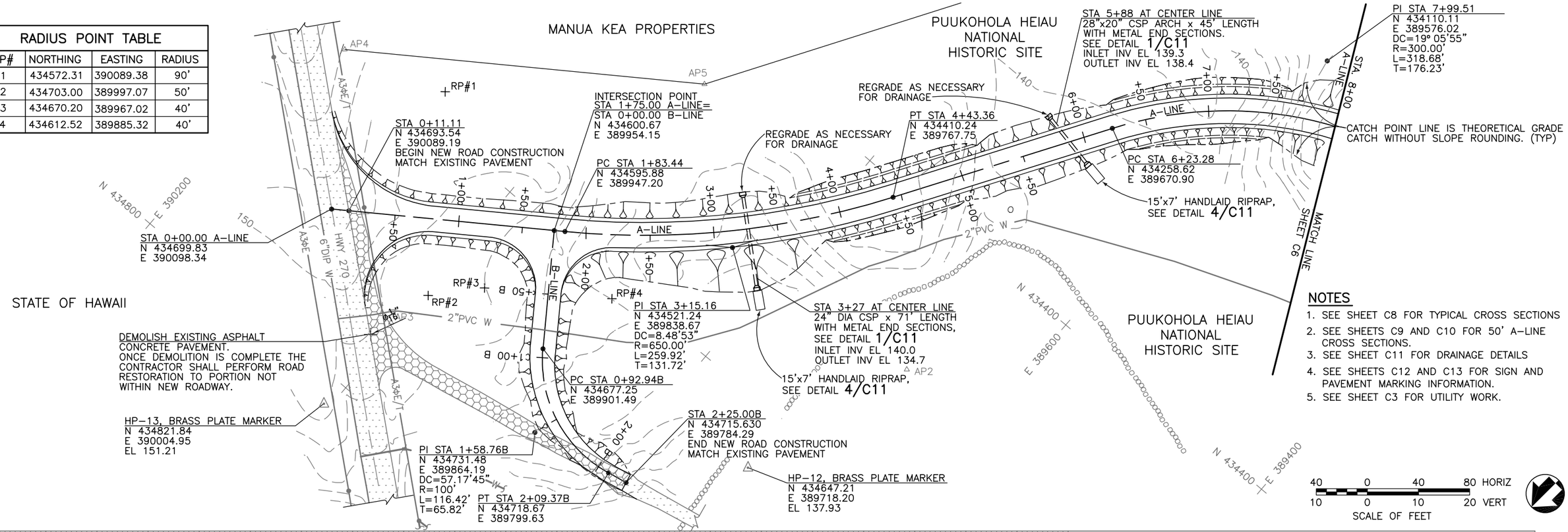

NOTES

1. SEE SHEET C8 FOR TYPICAL CROSS SECTIONS
2. SEE SHEETS C9 AND C10 FOR 50' A-LINE CROSS SECTIONS.
3. SEE SHEET C11 FOR DRAINAGE DETAILS
4. SEE SHEETS C12 AND C13 FOR SIGN AND PAVEMENT MARKING INFORMATION.
5. SEE SHEET C3 FOR UTILITY WORK.

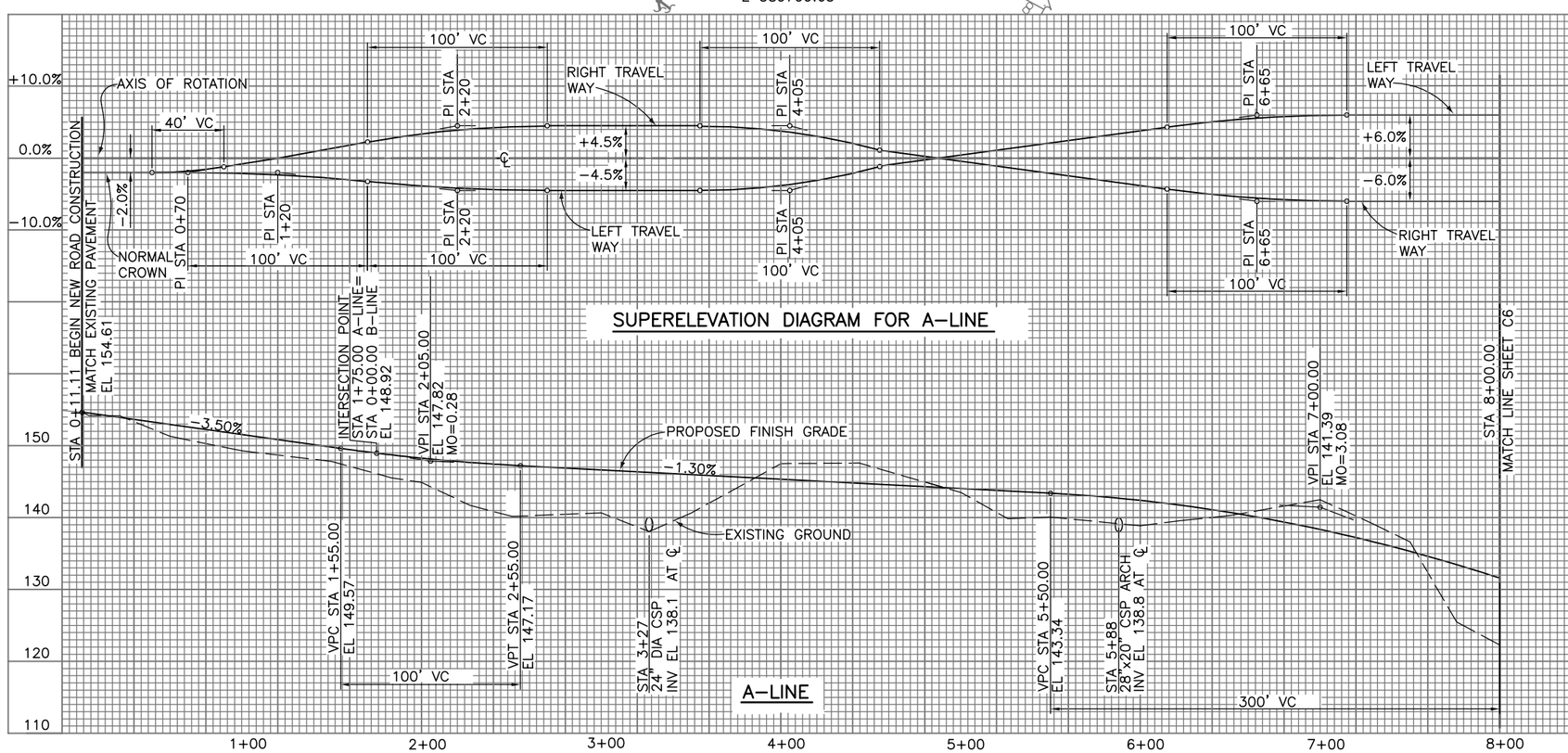

B-LINE SUPERELEVATION

ROAD CROSS SLOPE LEFT OF CENTER LINE: STA 0+13 MATCH A-LINE SURFACE AND TRANSITION TO -2% AT STA 0+43. MAINTAIN -2% FROM STA 0+43 TO STA 1+95, THEN TRANSITION FROM -2% TO CROSS SLOPE GRADE THAT EXISTS AT STA 2+25.
ROAD CROSS SLOPE RIGHT OF CENTER LINE: STA 0+13 MATCH A-LINE SURFACE AND TRANSITION TO -2% AT STA 0+43. MAINTAIN -2% FROM STA 0+43 TO STA 0+80. FROM STA. 0+80 TO 1+10 TRANSITION FROM -2.0% TO +2.0%. MAINTAIN +2.0% CROSS SLOPE FROM STA 1+10 TO STA 1+95, THEN TRANSITION FROM +2.0% TO CROSS SLOPE GRADE THAT EXISTS AT STA 2=25.

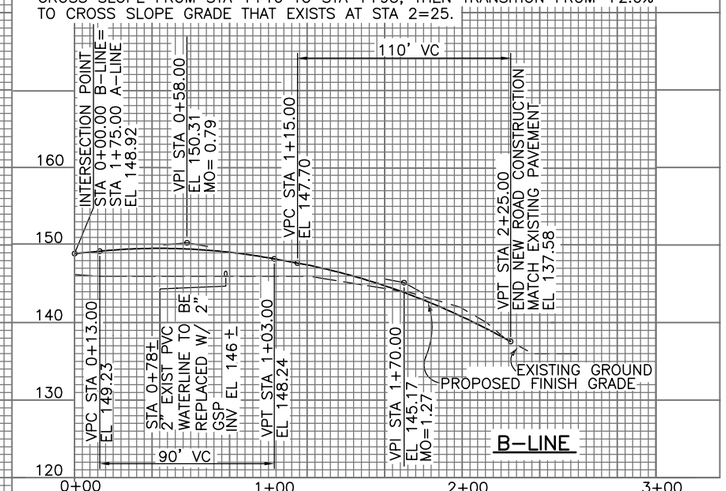

DESIGNED: B. DOE	SUB SHEET NO.	TITLE OF SHEET	DRAWING NO. 999 / 41,001
CADD L. WOLF	C8	SAMPLE ROADWAY PLAN AND PROFILE	PKG. NO. 108
TECH. REVIEW:			SHEET 10 OF 43
DATE: 10/94		NAME OF PARK	

8/24/01 11:14 C.EVERMAN R15 S:\SYM\USER\WPS10\FINAL-SET\CWILC8.DWG

NOTES

1. STA 12+50 TO 22+70.51 THE UTILITY LINE SHOWN IS THE LOCATION OF THE 4" WATER LINE
2. STA 22+70.51 TO 24+00 THE UTILITY LINE SHOWN IS THE LOCATION OF THE 8" WATER LINE
3. SEE SHEET C3 FOR ROADWAY AND DRAINAGE LAYOUT AND COORDINATE INFORMATION IN THIS AREA.

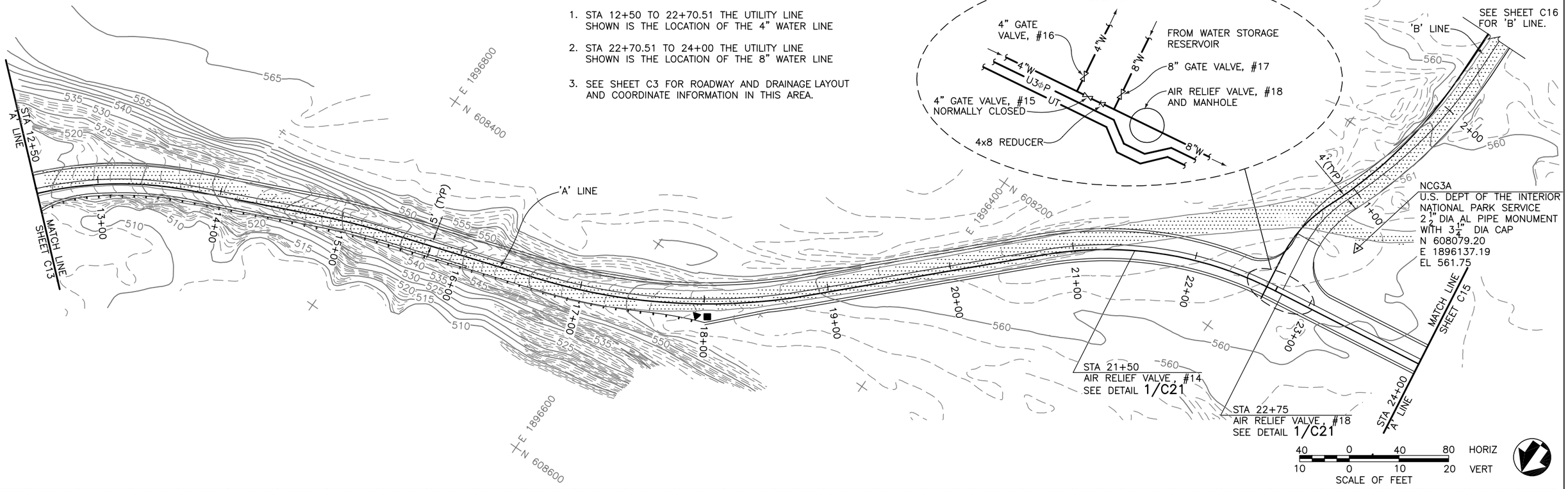

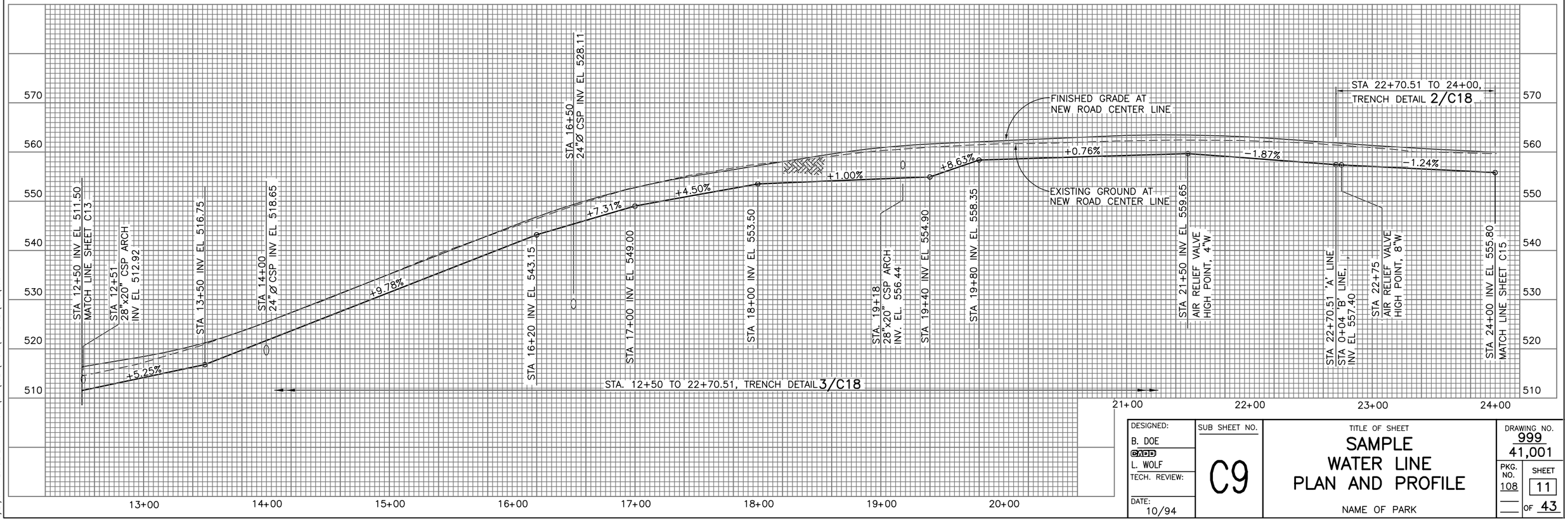

DESIGNED:	SUB SHEET NO.	TITLE OF SHEET	DRAWING NO.
B. DOE GADD L. WOLF TECH. REVIEW: DATE: 10/94	C9	SAMPLE WATER LINE PLAN AND PROFILE NAME OF PARK	999 41,001 PKG. NO. 108 SHEET 11 OF 43

8/24/01 11:26 C.EVERMAN R15 S:\SYM\USER\WPS10\FINAL-SET\CIVIL\C9.DWG

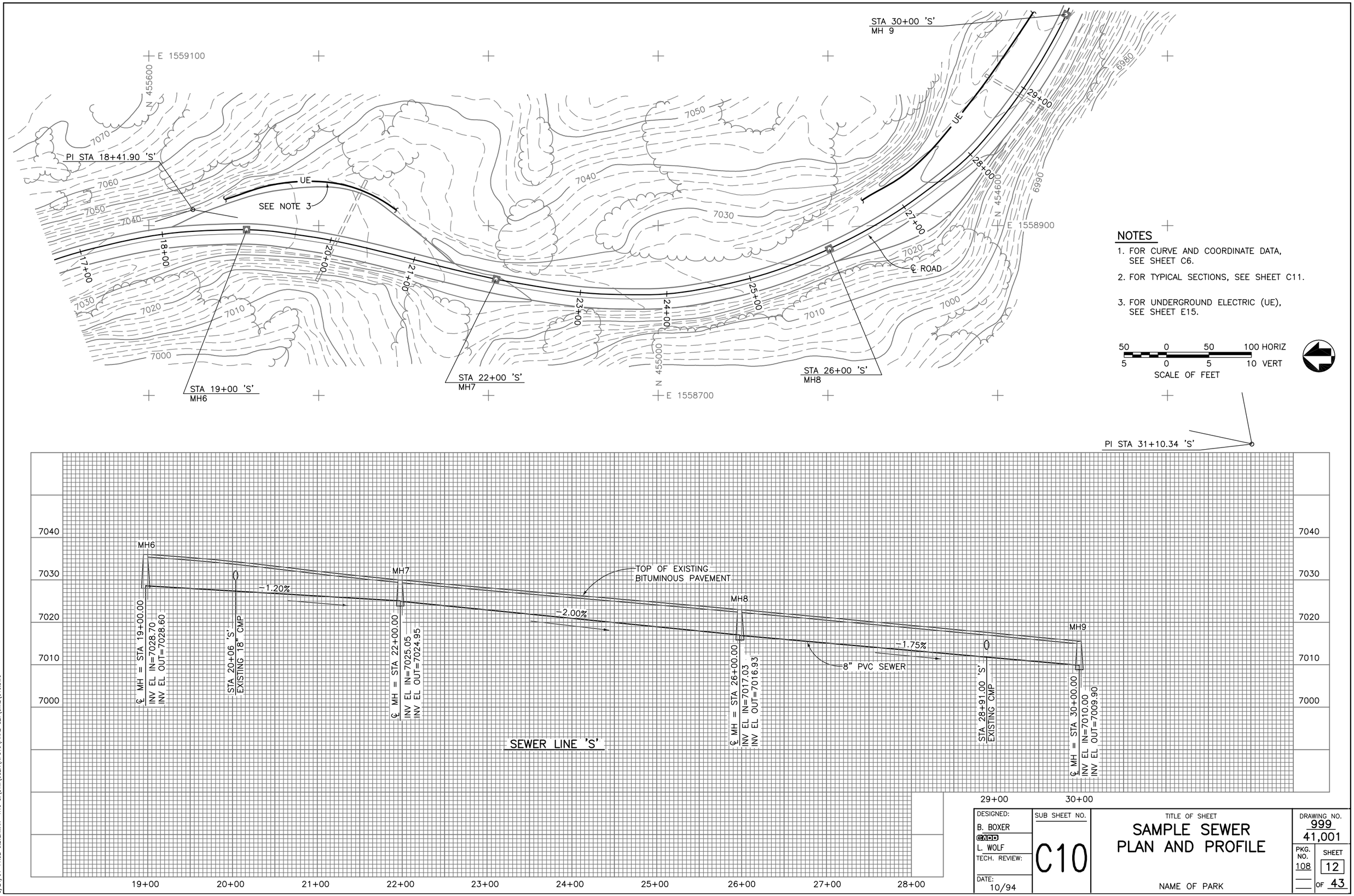

NOTES

1. FOR CURVE AND COORDINATE DATA, SEE SHEET C6.
2. FOR TYPICAL SECTIONS, SEE SHEET C11.
3. FOR UNDERGROUND ELECTRIC (UE), SEE SHEET E15.

50 0 50 100 HORIZ
5 0 5 10 VERT
SCALE OF FEET

DESIGNED: B. BOXER CADD L. WOLF TECH. REVIEW: DATE: 10/94	SUB SHEET NO. C10	TITLE OF SHEET SAMPLE SEWER PLAN AND PROFILE NAME OF PARK	DRAWING NO. 999 41,001 PKG. NO. 108 SHEET 12 OF 43

8/24/01 11:32 C:DVERMAN R15 S:\SYM\USER\NPS10\FINAL-SET\CIVIL\C10.DWG

TABLE I THRUST(T) AT FITTINGS, IN POUNDS AT 100 PSI WATER PRESSURE					
PIPE SIZE	TEE OR DEAD END	90° BEND	45° BEND	$22\frac{1}{2}$° BEND	$11\frac{1}{4}$° BEND
$1\frac{1}{2}$"	284	401	217	111	56
2"	443	627	339	173	87
$2\frac{1}{2}$"	649	918	497	253	127
3"	962	1361	736	375	189
4"	1810	2559	1385	706	355
6"	3739	5288	2862	1459	733
8"	6433	9097	4923	2510	1261
10"	9677	13685	7406	3776	1897
12"	13685	17600	10474	4847	2683
14"	18385	26001	14072	7174	3604
16"	23779	30971	18199	9278	4661

TABLE II SAFE BEARING LOADS (B)	
SOIL	SAFE BEARING LOAD, POUNDS PER SQ. FT.
SOUND SHALE	10000
CEMENTED SAND AND GRAVEL	4000
COARSE AND FINE COMPACTED SAND	3000
MEDIUM CLAY (CAN BE SPADED)	2000
SOFT CLAY	1000
MUCK	0

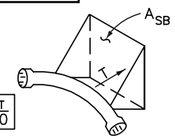

$$A_{SB} = \frac{T}{B} \times \frac{P_T}{100}$$

WHERE:

A_{SB} = AREA OF BLOCK BEARING AGAINST UNDISTURBED TRENCH MATERIAL IN SQ FT

T = THRUST FACTOR FROM TABLE I IN POUNDS AT 100 PSI

B = SAFE BEARING LOAD FROM TABLE II IN POUNDS/SQ FT

P_T = PRESSURE USED FOR PIPELINE TEST IN PSI

THRUST BLOCK SIZING

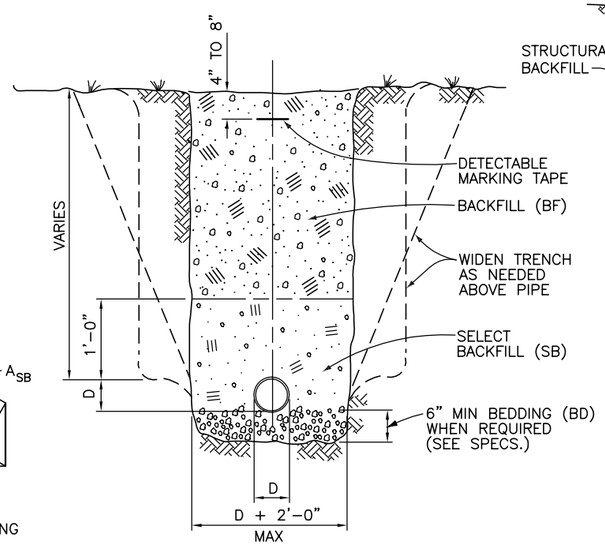

TRENCH DETAIL

SINGLE PIPE, NON-TRAFFIC AREA

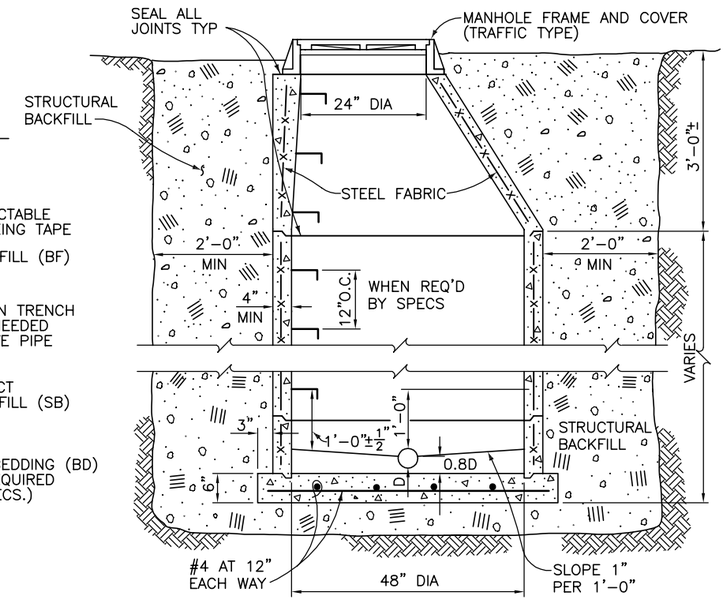

NOTES

1. SEE SPECS FOR CAST-IN-PLACE BASE PREPARATION.
2. USING GRADE RINGS, ADJUST RING AND COVER SO BOTH ELEVATION AND SLOPE ARE 1" ABOVE GRADE IN OPEN AND GRASSED AREAS, OR FLUSH IN PAVED SURFACES.

PRECAST CONCRETE MANHOLE

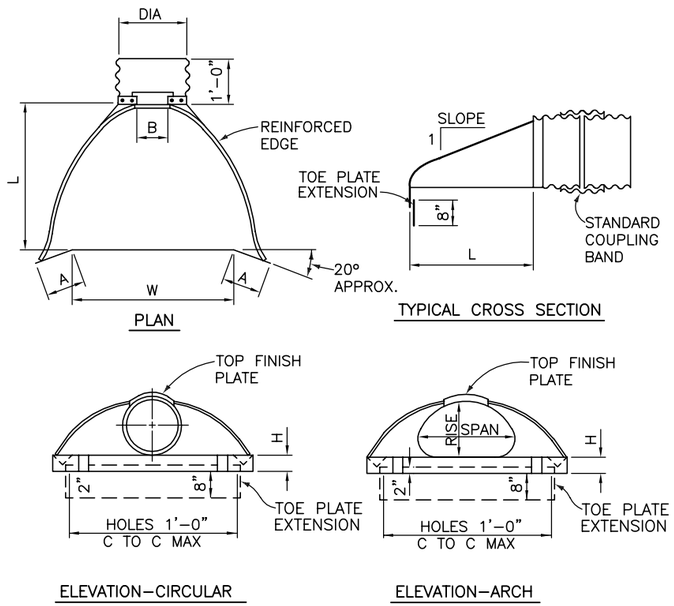

METAL END SECTIONS FOR CSP CULVERTS

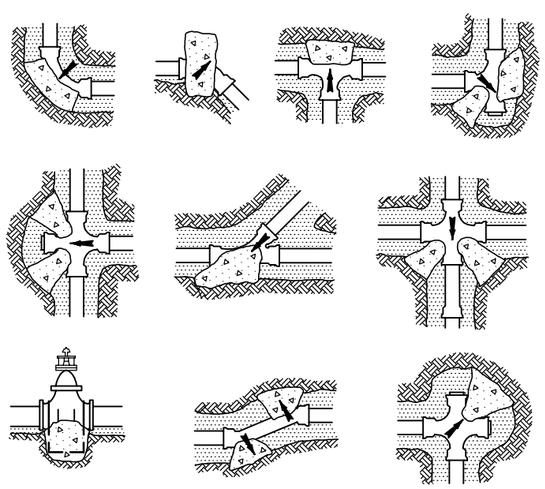

LOCATION OF THRUST BLOCKS

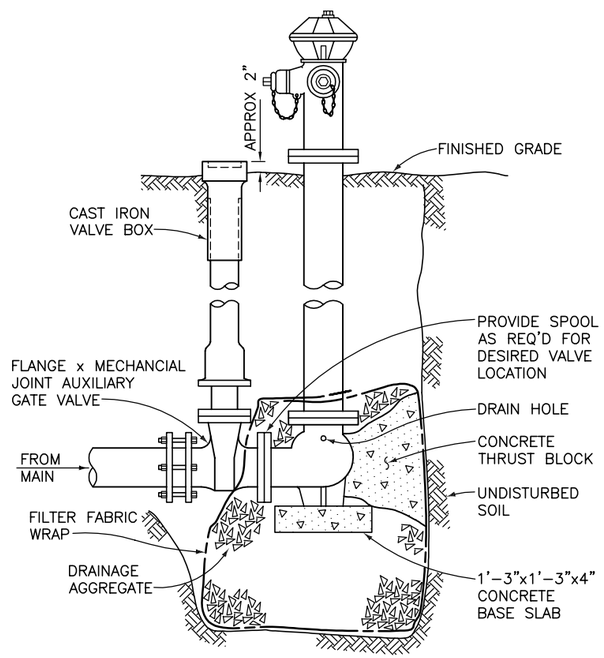

FIRE HYDRANT

DRY BARREL TYPE WITH VALVE AND BOX

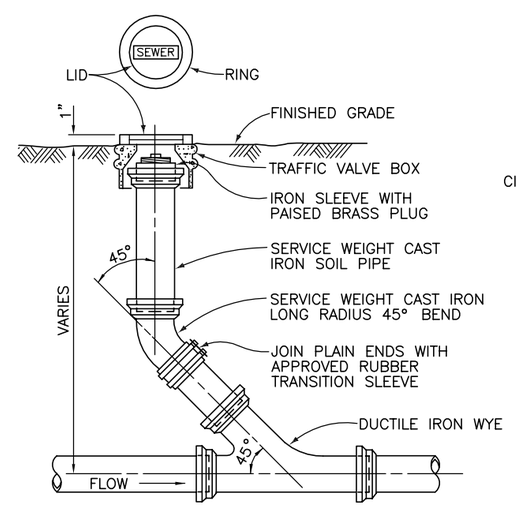

SEWER LINE CLEANOUT DETAIL

END SECTIONS									
	PIPE (IN)	MINIMUM THICKNESS (IN)	DIMENSIONS (INCHES)					APPROX SLOPE	BODY (PCS)
			A	B (MAX)	H	L	W		
ARCH	SPAN 18 RISE 11	0.1046	4	9	6	19	30	$2\frac{1}{2}$	1
CIRCULAR	15	0.1046	$4\frac{1}{2}$	9	6	19	30	$2\frac{1}{2}$	1

NOTES

1. TOE PLATE EXTENSIONS SHALL BE INSTALLED ON END SECTIONS AND SHALL HAVE A MINIMUM THICKNESS OF 0.138 INCHES (STEEL).
2. END SECTION CONNECTION SHALL INCLUDE ONE FOOT OF PIPE LENGTH. THE CONNECTOR SECTION WILL BE THE SAME THICKNESS AS THE METAL END SECTION, AND WILL BE ATTACHED BY GALVANIZED RIVETS OR BOLTS SPACED AT A MAXIMUM OF SIX INCHES. A SHOP TACK WELD ONE INCH LONG AT THE SAME SPACING MAY BE USED IN LIEU OF RIVETS OR BOLTS.

NO SCALE

DESIGNED: B. HENRY	SUB SHEET NO.	TITLE OF SHEET	DRAWING NO. 999 41,001
CADD L. WOLF	C11	SAMPLE STANDARD DETAILS	PKG. NO. 108
TECH. REVIEW:			SHEET 13 OF 43
DATE: 10/94		NAME OF PARK	

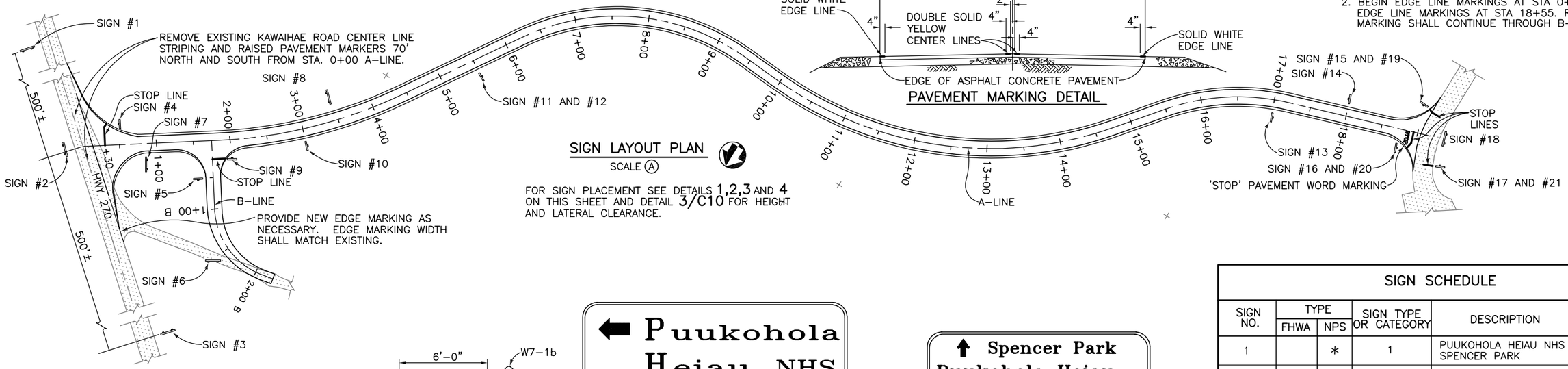

SIGN LAYOUT PLAN

SCALE (A)

FOR SIGN PLACEMENT SEE DETAILS 1,2,3 AND 4 ON THIS SHEET AND DETAIL 3/C10 FOR HEIGHT AND LATERAL CLEARANCE.

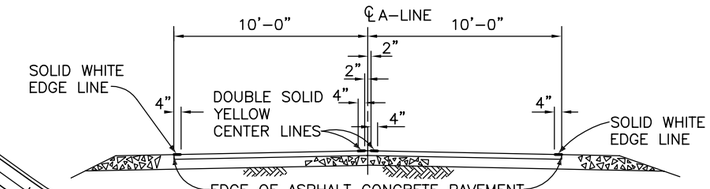

PAVEMENT MARKING DETAIL

NOTES

1. BEGIN CENTER LINE MARKINGS AT STA 0+30A-LINE, END CENTER LINE MARKINGS AT STA 18+95 A-LINE.
2. BEGIN EDGE LINE MARKINGS AT STA 0+75 A-LINE, END EDGE LINE MARKINGS AT STA 18+55. RIGHT EDGE LINE MARKING SHALL CONTINUE THROUGH B-LINE INTERSECTION.

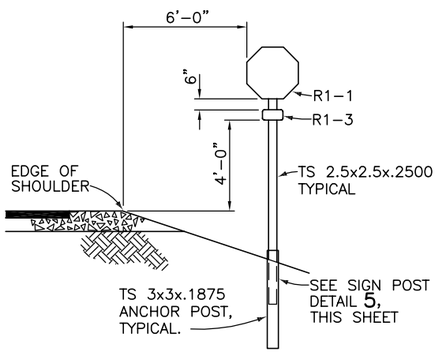

1 C12 **R1-1 AND R1-3 SIGN PLACEMENT**

SIGN #15,#16,#17,#19,#20,AND#21
NO SCALE

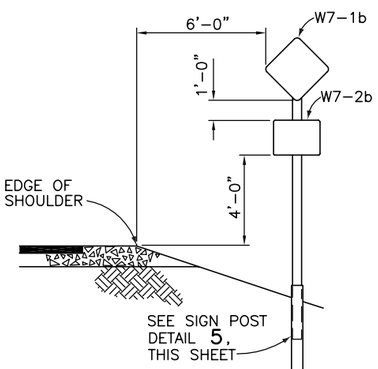

2 C12 **W7-1b AND W7-2b SIGN PLACEMENT**

SIGN #11 AND #12
NO SCALE

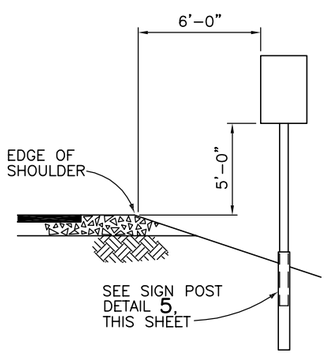

3 C12 **SINGLE REGULATORY OR WARNING SIGN PLACEMENT**

(ONE POST INSTALLATION)
SIGN #4,#5,#9,#10,#13,#14
NO SCALE

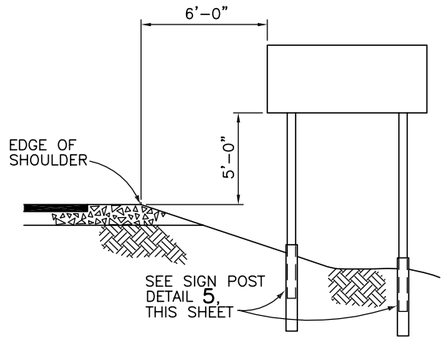

4 C12 **SINGLE REGULATORY OR WARNING SIGN PLACEMENT**

(TWO POST INSTALLATION)
SIGN #2 AND #18
NO SCALE

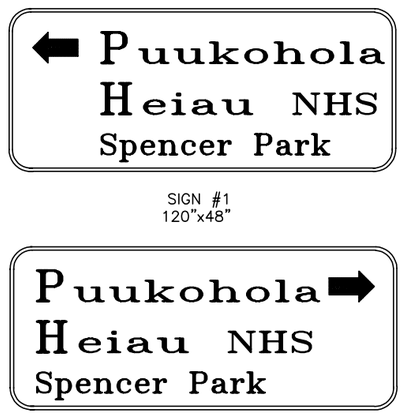

SIGN #1
120"x48"

SIGN #3
114"x48"

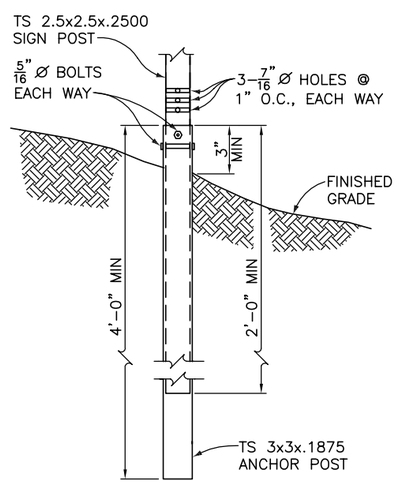

5 C12 **SIGN POST DETAIL**

SCALE (B)

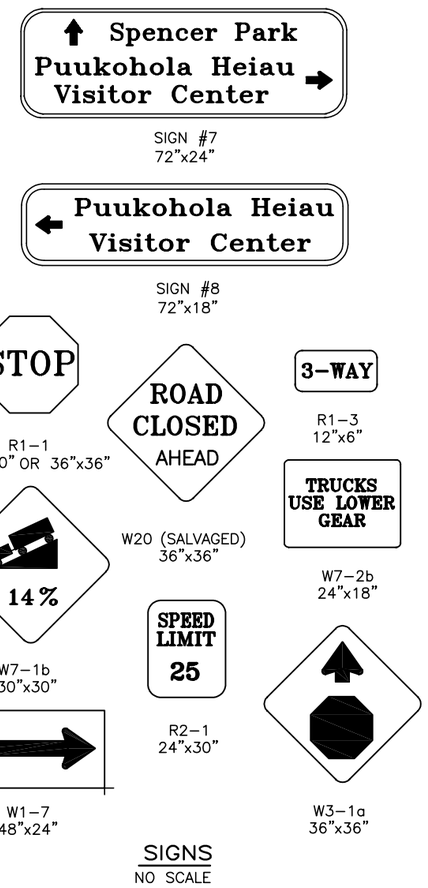

SIGN #7
72"x24"

SIGN #8
72"x18"

R1-1
30"x30" OR 36"x36"

R1-3
12"x6"

W20 (SALVAGED)
36"x36"

W7-2b
24"x18"

W7-1b
30"x30"

R2-1
24"x30"

W1-7
48"x24"

W3-1a
36"x36"

SIGNS

NO SCALE

SIGN SCHEDULE

SIGN NO.	TYPE FHWA	TYPE NPS	SIGN TYPE OR CATEGORY	DESCRIPTION	SIZE WxH
1		*	1	PUUKOHOLA HEIAU NHS SPENCER PARK	120"x48"
2	*		W1-7	DOUBLE ARROW	48"x24"
3		*	1	PUUKOHOLA HEIAU NHS SPENCER PARK	114"x48"
4	*		R1-1	STOP	36"x36"
5	*		W20	ROAD CLOSED AHEAD (SALVAGED)	36"x36"
6		*	3	PUUKOHOLA HEIAU NHS ENTRANCE SIGN	87"x38"
7		*	3	SPENCER PARK PUUKOHOLA HEIAU V.C.	72"x24"
8		*	3	PUUKOHOLA HEIAU VISITOR CENTER	72"x18"
9	*		R1-1	STOP	30"x30"
10	*		R2-1	SPEED LIMIT 25	24"x30"
11	*		W7-1b	HILL WITH % GRADE	30"x30"
12	*		W7-2b	TRUCKS USE LOWER GEAR	24"x18"
13	*		W3-1a	STOP AHEAD	36"x36"
14	*		R2-1	SPEED LIMIT 25	24"x30"
15	*		R1-1	STOP	36"x36"
16	*		R1-1	STOP	36"x36"
17	*		R1-1	STOP	36"x36"
18	*		W1-7	DOUBLE ARROW	48"x24"
19	*		R1-3	3-WAY	12"x6"
20	*		R1-3	3-WAY	12"x6"
21	*		R1-3	3-WAY	12"x6"

NOTES

1. FOR DETAILS ON SIGNS #1, #3, #6, #7, #8 SEE SHEET C13.
2. FOR MORE INFORMATION ON NPS SIGNS REFER TO THE JANUARY 1988 NPS SIGN MANUAL. FOR MORE INFORMATION ON REGULATORY SIGNS REFER TO THE MANUAL ON UNIFORM TRAFFIC CONTROL DEVICES, 1988 EDITION.

SCALE (B) 12 6 0 12 SCALE OF INCHES

SCALE (A) 60 0 60 120 SCALE OF FEET

DESIGNED: B. WADER CADD L. WOLF TECH. REVIEW: DATE: 10/94	SUB SHEET NO. C12	TITLE OF SHEET SAMPLE PLAN AND DETAILS FOR ROADWAY SIGNS AND PAVEMENT MARKINGS NAME OF PARK	DRAWING NO. 999 41,001 PKG. NO. 108 SHEET 14 OF 43

8/13/01 14:36 C.EVERMAN R15 S:\SYM\USER\NPS10\FINAL-SET\CIVIL\C12.DWG

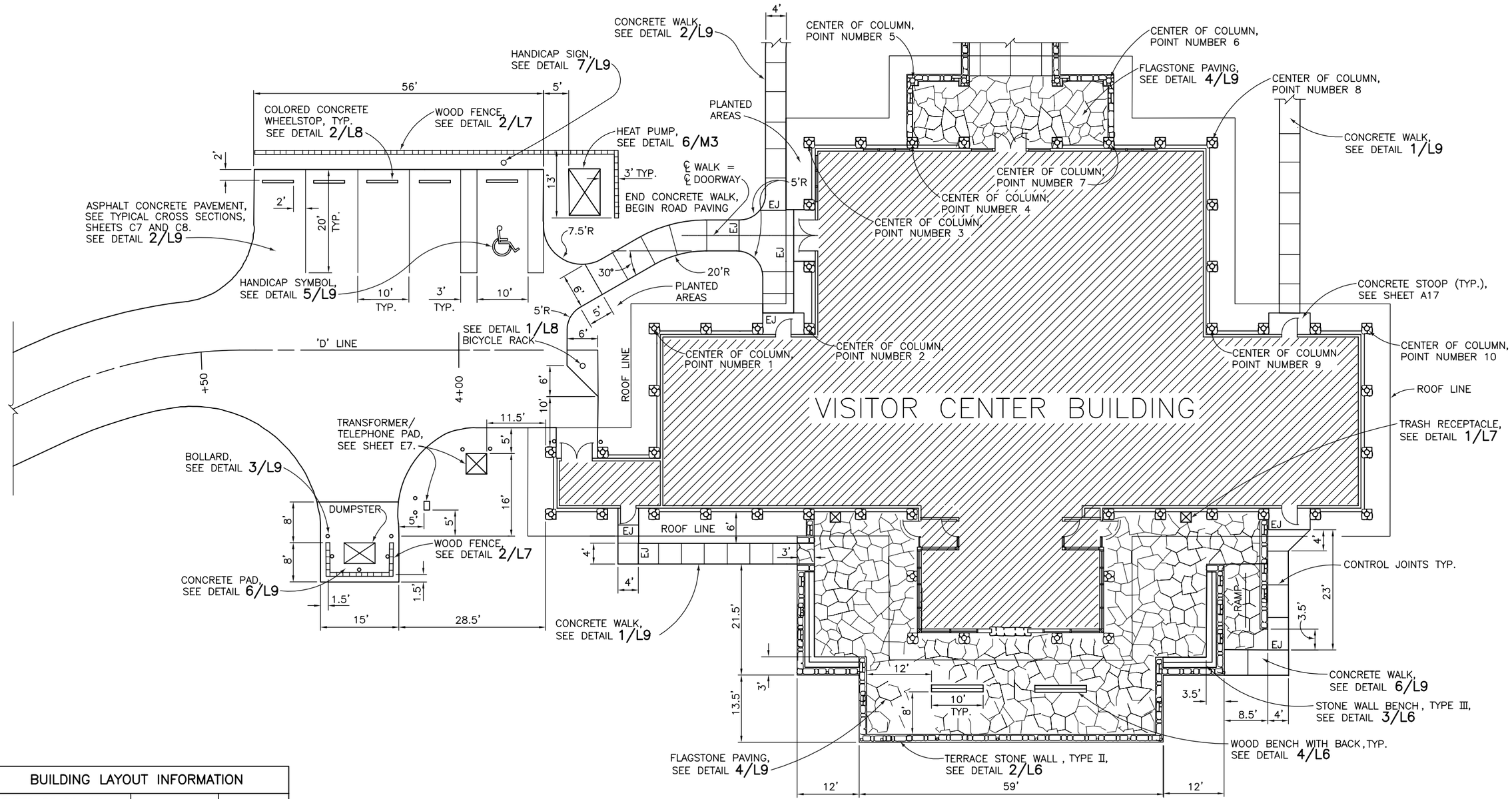

BUILDING LAYOUT INFORMATION		
CENTER OF COLUMN POINT NUMBER	NORTHING	EASTING
1	608183.29	1895629.87
2	608181.73	1895599.91
3	608145.78	1895601.79
4	608144.74	1895581.81
5	608132.76	1895582.44
6	608130.78	1895544.49
7	608142.77	1895543.86
8	608141.72	1895523.89
9	608177.67	1895522.02
10	608176.11	1895492.06

NOTE

1. SEE SHEET L7 FOR GRADING PLAN.
2. SEE SHEET C4 FOR ROAD AND PARKING LAYOUT INFORMATION.

10 0 10 20
SCALE OF FEET

DESIGNED: A. BROWN CADD L. WOLF TECH. REVIEW: DATE: 10/94	SUB SHEET NO. L1	TITLE OF SHEET SAMPLE SITE PLAN BUILDING TERRACE NAME OF PARK	DRAWING NO. 999 41,001 PKG. NO. 108 SHEET 15 OF 43

8/13/01 14:41 C:DVERMAN R15 S:\SYM\USER\NPS10\FINAL-SET\LA\L1.DWG

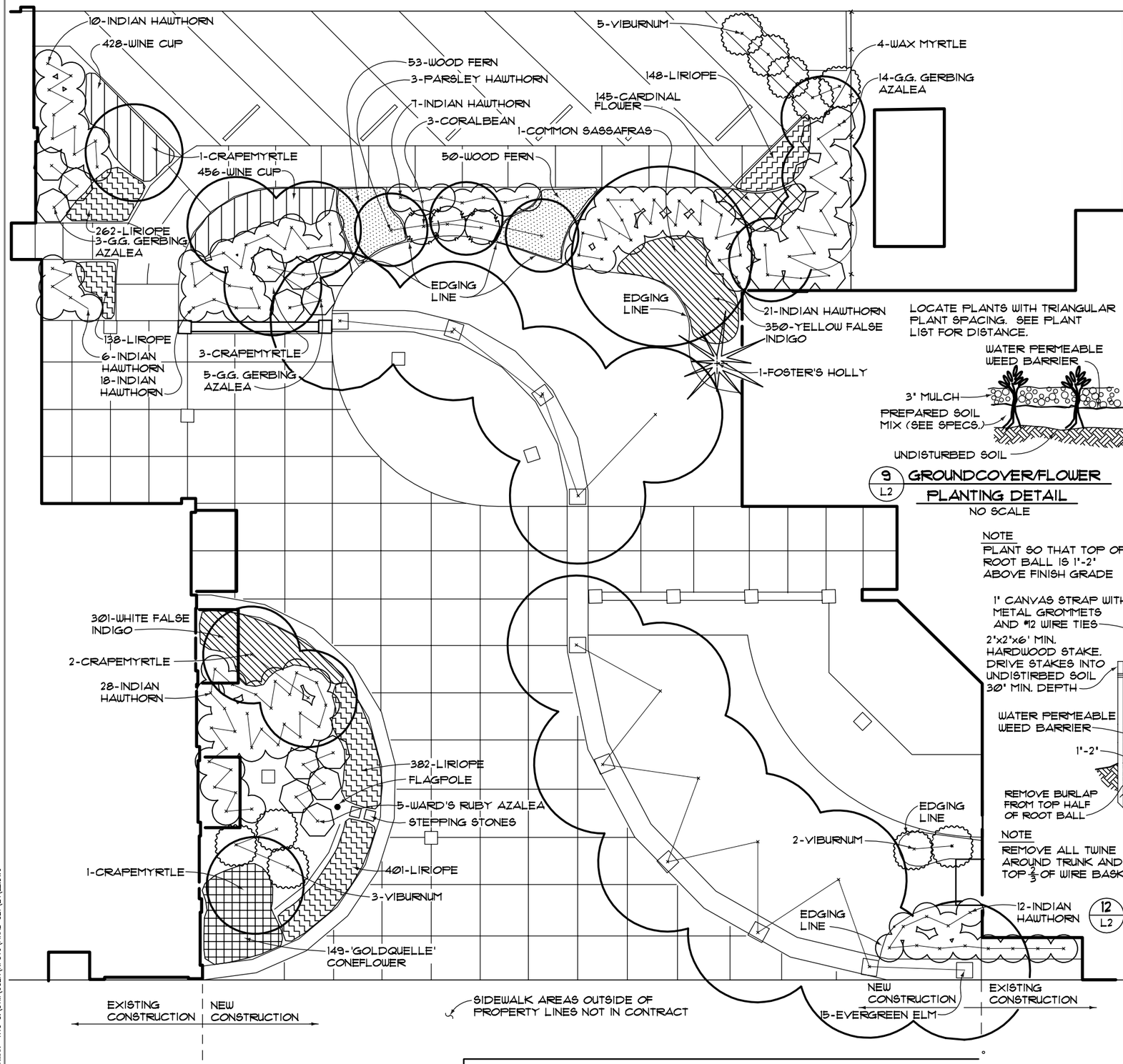

3 / L2 LANDSCAPE SITE PLAN

LOCATE PLANTS WITH TRIANGULAR PLANT SPACING. SEE PLANT LIST FOR DISTANCE.

9 / L2 GROUNDCOVER/FLOWER PLANTING DETAIL
NO SCALE

PLANT LIST

QTY	COMMON NAME	BOTANICAL NAME	SIZE/CONDITION
15	EVERGREEN ELM	ULMUS PARVIFOLIA 'DRAKE' (ROOT BALL TO FIT TREE GRATE)	2 1/2" CAL./B&B (12' TO 14' MATCHED)
1	COMMON SASSAFRAS	SASSAFRAS ALBIDIUM	2" CAL./B&B SPECIMEN
3	PARSLEY HAWTHORN	CRATAEGUS MARSHALLI	6'-8' HT./B&B
7	CRAPEMYRTLE	LAGERSTROMIA INDICA 'POTOMAC'	8'-10" HT./B&B (MULTITRUNK SPECIMEN)
4	WAX MYRTLE	MYRICA CERIFERA	8'-10' HT./B&B (FULL MULTI-TRUNK)
1	FOSTER'S HOLLY	ILEX X ATTENUATA 'FOSTERII'	6'-8' HT. SPECIMEN B&B (FULL BRANCHING TO GROUND)
10	JAPANESE VIBURNUM	RHODODENDRON INDICUM 'G.G. GERBING'	36"-42" HT./B&B (FOR SCREENING)
22	AZALEA G.G. GERBING	VIBURNUM JAPINUCA 'LEATHERLEAF'	30"-36" HT./ CONTAINER (FULL)
5	AZALEA WARD'S RUBY	RHODODENDRON SP. KURUMES HYBRID 'WARD'S RUBY'	24"-30" HT./ CONTAINER (FULL)
102	INDIAN HAWTHORN	RAPHIOLEPIS INDICA 'CLARA'	24"-30" HT./CONTAINER (FULL)
3	CORALBEAN	ERYTHRINA HERBACEA	18"-24" HT./ CONTAINER
145	CARDINAL FLOWER	LOEBELIA CARDINALIS	1-GAL/FULL, PLANT 8" O.C.
350	YELLOW FALSE INDIGO	BAPTISIA TINCTORIA	1-QUART/FULL, PLANT 8" O.C.
301	WHITE FALSE INDIGO	BAPTISIA ALBA	1-QUART/FULL, PLANT 8" O.C.
884	WINE CUP	CALLITHOE DIGITATA	2 1/4" POT/FULL, PLANT 6" O.C.
112	WOOD FURN	DRYOPTERIS SPP.	1-GAL/FULL, PLANT 15" O.C.
149	CONEFLOWER GOLDQUELLE	RUDBECKIA LACINIATA 'GOLDQUELLE'	1-QUART/FULL, PLANT 12" O.C.
1331	LIRIOPE	LIRIOPE MUSCARI 'TIDWELL'S BIG BLUE'	2-1/4" POT/FULL, PLANT 6" O.C.
2	STEPPING STONES (TO MATCH CONCRETE FINISH OF COURTYARD)		2'x2'
3230	BED PREPARATION (ALL AREAS WITH SHRUBS & GROUND COVER)		SQ. FT.
400	SOD (REPLACE WITH EQUAL TO EXISTING SOD)		SQ. YD.
166	RYERSON STEEL EDGING (OR APPROVED EQUAL)		LIN. FT. (3/16"x4")

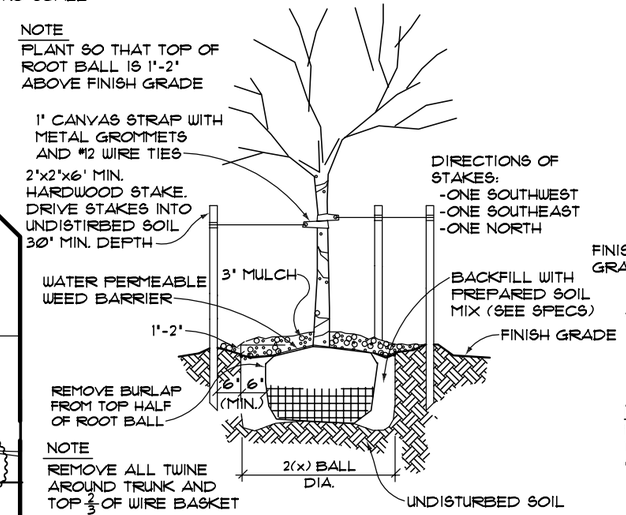

12 / L2 TREE PLANTING DETAIL
NO SCALE

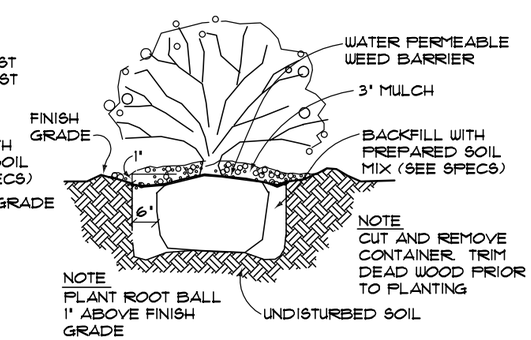

8 / L2 SHRUB PLANTING DETAIL
NO SCALE

8 0 8 16
SCALE OF FEET

DESIGNED:	SUB SHEET NO.	TITLE OF SHEET	DRAWING NO.
A. BROWN CADD L. WOLF TECH. REVIEW: DATE: 10/94	L2	SAMPLE LANDSCAPE PLAN AND DETAILS NAME OF PARK	999 41,001 PKG. NO. 108 SHEET 16 OF 43

8/24/01 11:37 C.EVERMAN R15 S:\SYM\USER\NPS10\FINAL-SET\LA\L2.DWG

POINT OF CONNECTION (P.O.C.)

P.O.C. IS EXISTING $1\frac{1}{2}$" COPPER SERVICE STUBBED OUT AT APPROXIMATELY 24" DEPTH OF BURY.

CONTRACTOR SHALL PROVIDE AND INSTALL CONNECTION, $1\frac{1}{2}$" TYPE-K COPPER SERVICE THROUGH METER AND BACKFLOW PREVENTER, NEW $1\frac{1}{2}$" PVC MAINLINE, 1" MANUAL DRAIN VALVE, AND EXTEND MAINLINE TOWARD CONTROL VALVES @ 24" MINIMUM DEPTH OF BURY. PROVIDE 3 CUBIC FOOT DRAIN SUMP AT MANUAL DRAIN VALVE.

IRRIGATION LEGEND

- SALCO HIGH TEMPERATURE PVC FLEX HOSE (DRIP LINE). $\frac{1}{2}$" AR-050-HT, RESISTANT TO UV RADIATION, COMPATIBLE WITH SCHEDULE 40 PIPE FITTINGS, INFUSED WITH ALGICIDE AND IMPERVIOUS TO CHEMICALS/ FERTILIZERS. SEE SPECIFICATIONS AND DETAILS FOR EMITTER TYPES AND FITTINGS.
- FLUSHING END PLUG. SEE DETAILS AND SPECIFICATIONS.
- QC — RAINBIRD $\frac{3}{4}$" QUICK COUPLING VALVES, 3RC, WITH STANDARD LOCKING COVER, 35K COUPLER KEY
- RAINBIRD PEB SERIES REMOTE CONTROL VALVES, SIZED AS SHOWN.
- MANUAL ISOLATION GATE VALVE, SIZED TO MAINLINE. SEE PLANS AND DETAILS.
- (M) KENT C-700 2"x2" POSITIVE DISPLACEMENT WATER METER.
- DC — FEBCO MODEL 805Y $1\frac{1}{2}$" DOUBLE CHECK VALVE ASSEMBLY AND RELATED EQUIPMENT. SEE DETAILS AND SPECIFICATIONS.
- CLASS 160 PVC PRESSURE MAINLINE, BELL END, SOLVENT WELD, WITH SCHEDULE 40 PVC FITTINGS, SIZED AS SHOWN. THRUST BLOCK ALL TURNS AND ENDS.
- CLASS 160 PVC SLEEVING, 6" FOR MAINLINES, CONTROL WIRE CONDUIT AND DRIPLINE LATERALS.
- NIBCO 1" ANGLE MANUAL DRAIN VALVE. SEE DETAILS AND SPECIFICATIONS.
- C — RAINBIRD ISC-24-B+ AUTOMATIC CONTROLLER, WALL MOUNT WITH LOCKABLE CABINET

12 / 1" — 114 GPH / 1.9 GPM
GPH = GALLONS PER HOUR
ZONE NUMBER/VALVE SIZE & TYPE GPM MARKER.
GPM = GALLONS PER MINUTE

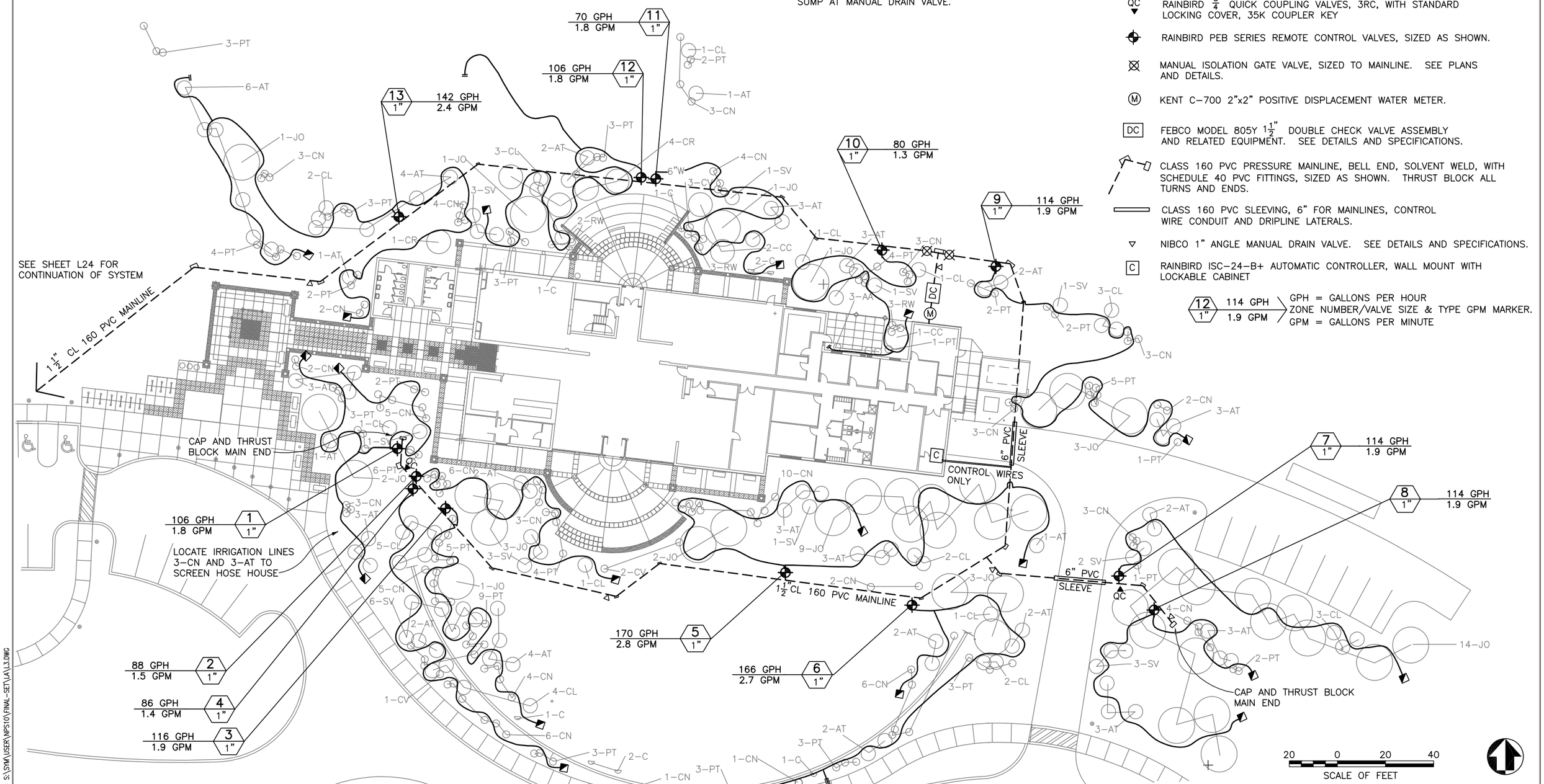

DESIGNED: A. BROWN	SUB SHEET NO.	TITLE OF SHEET	DRAWING NO. 999 41,001
CADD L. WOLF	L3	SAMPLE VISITOR CENTER IRRIGATION LAYOUT	PKG. NO. 108
TECH. REVIEW:			SHEET 17 OF 43
DATE: 10/94		NAME OF PARK	

8/13/01 14:50 C.EVERMAN R15 S:\SYM\USER\NPS10\FINAL-SET\LA\L3.DWG

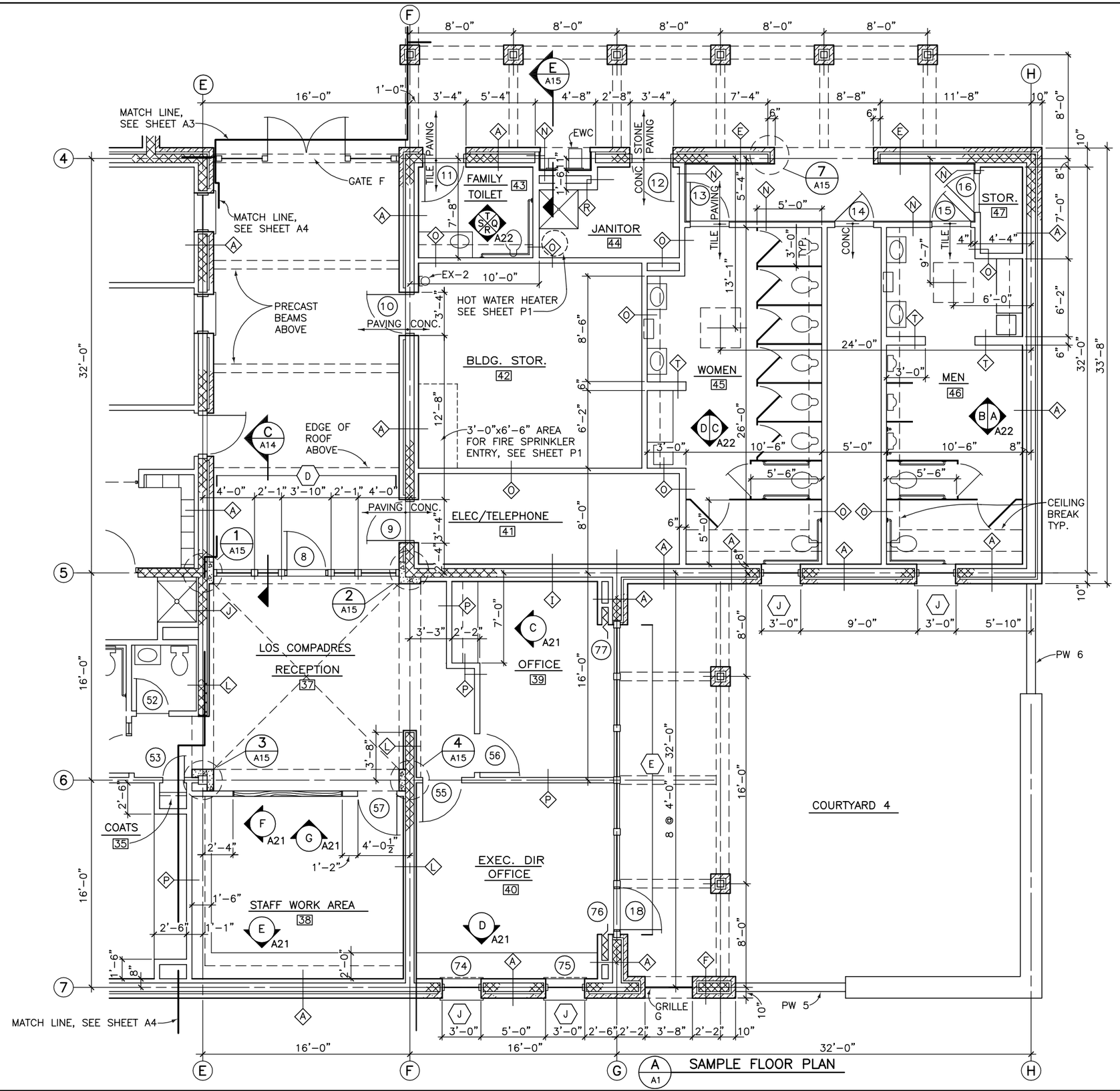

A A1 SAMPLE FLOOR PLAN

BUILDING CODE DATA

CODE: UNIFORM BUILDING CODE, 1991
OCCUPANCY GROUP: A3/B2
CONSTRUCTION TYPE: III N

NOTES

1. DIMENSIONS TO FACE OF MASONRY OR STUDS OR CENTER LINE OF COL, CMU OR STUDS
2. SEE SHEET A19 FOR WALL TYPES INDICATED THUS X

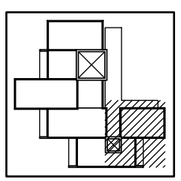

KEY PLAN

4 0 4 8
SCALE OF FEET

BLDG. 13°

DESIGNED: TREANTS RUSSELL CADD DL SIKES	SUB SHEET NO. A1	TITLE OF SHEET SAMPLE FLOOR PLAN	DRAWING NO. 999 41,001
TECH. REVIEW:			PKG. NO. 108
DATE: 10/94		NAME OF PARK	SHEET 18 OF 43

8/24/01 11:43 C:EVERMAN R15 S:\SYM\USER\NPS10\FINAL-SET\ARCH\A1.DWG

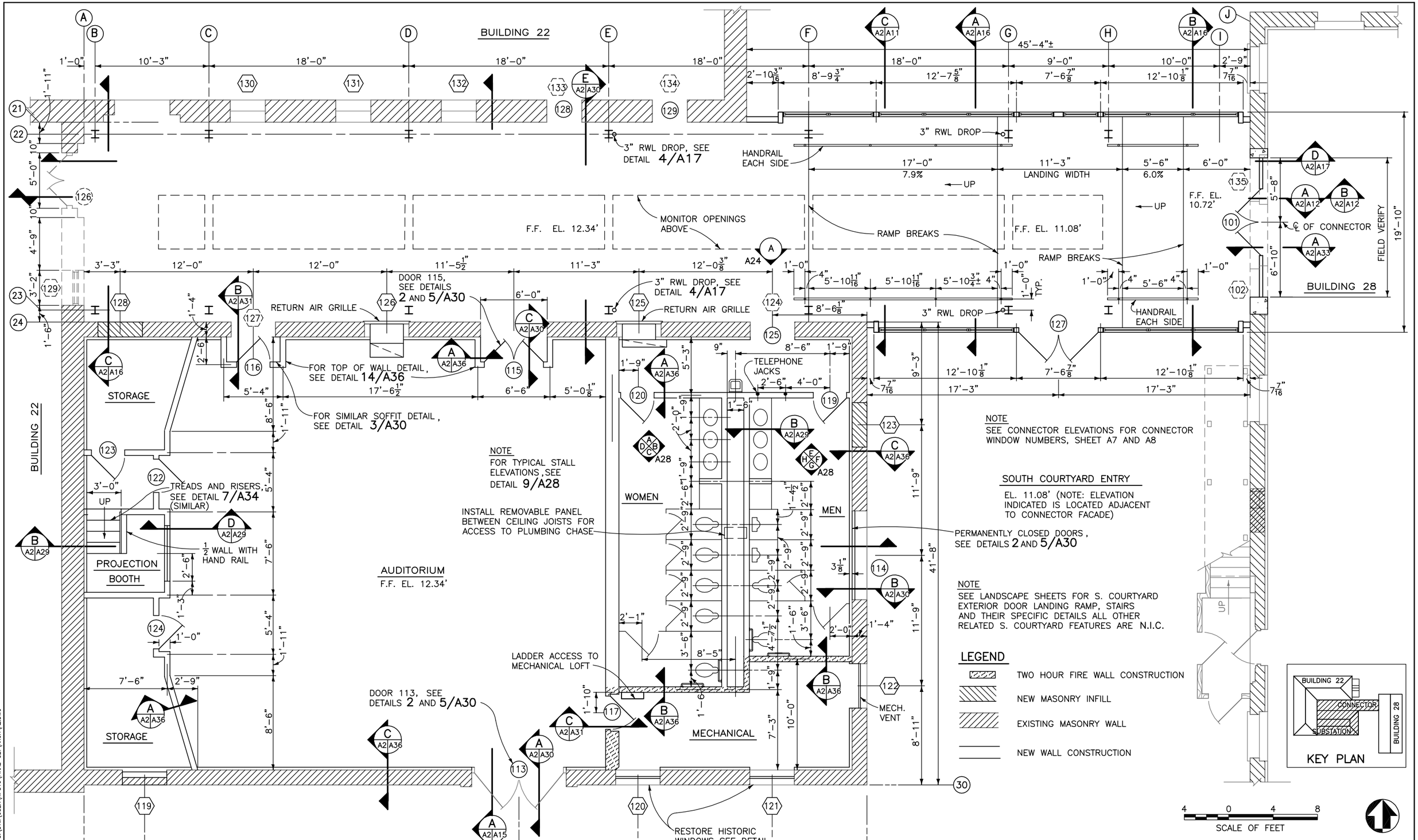

A/A2 NEW SUBSTATION AND CONNECTOR FLOOR PLANS

DESIGNED: D. SNOW K. BENNETT	SUB SHEET NO.	TITLE OF SHEET	DRAWING NO.
CADD ML. GROVES	A2	SAMPLE RENOVATION FLOOR PLAN	999 41,001
TECH. REVIEW:			PKG. NO. 108
DATE: 10/94		NAME OF PARK	SHEET 19 OF 43

8/10/01 10:51 C.EVERMAN R15 S:\SYM\USER\NPS10\FINAL-SET\ARCH\A2.DWG

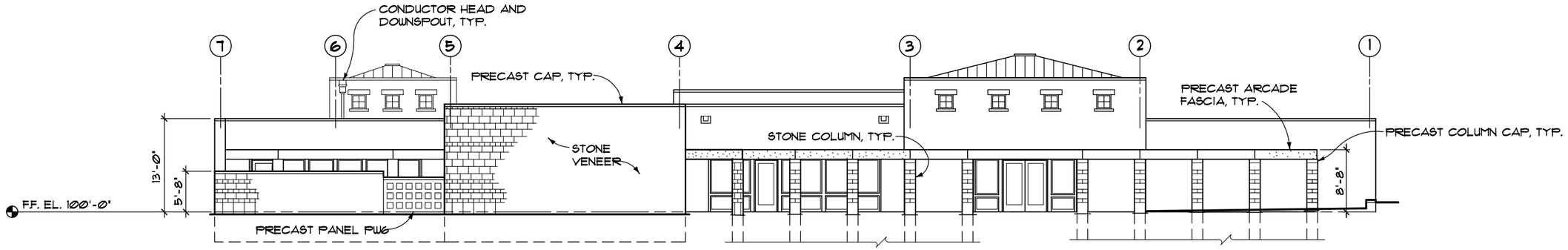

A/A3 EAST ELEVATION

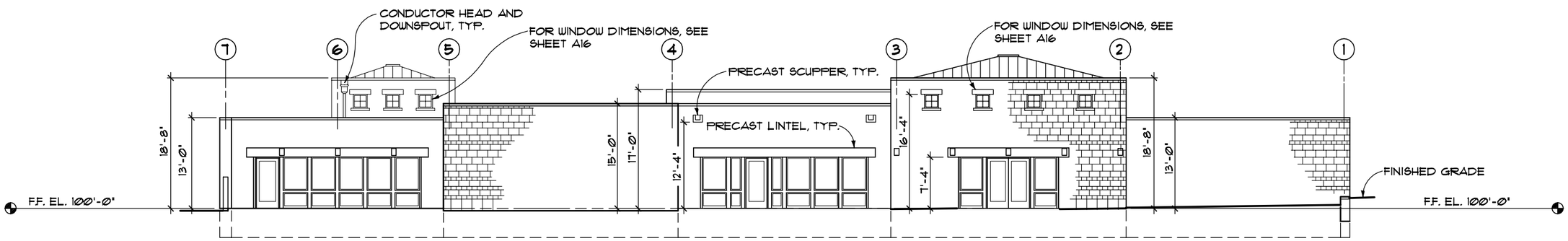

B/A3 EAST ELEVATION WITHOUT ARCADE AND COURTYARD WALLS

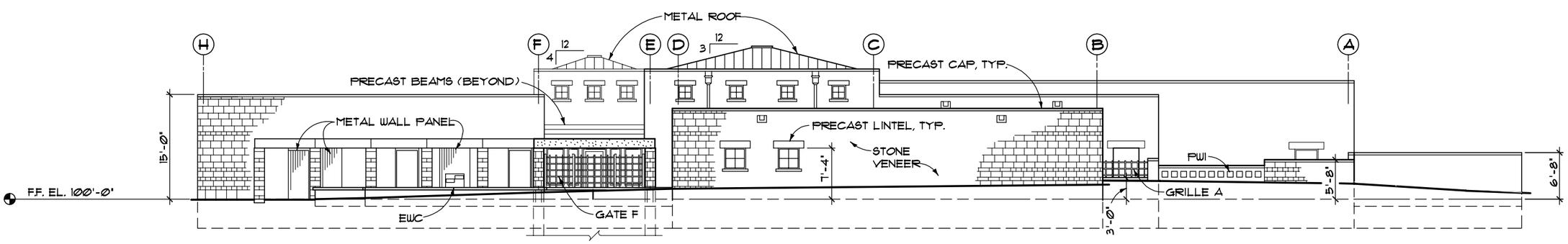

C/A3 NORTH ELEVATION

8 0 8 16
SCALE OF FEET

DESIGNED: TREANTS/ SALDANA	SUB SHEET NO.	TITLE OF SHEET	DRAWING NO.
GADD DJ SIKES	A3	SAMPLE ELEVATIONS	999 41,001
TECH. REVIEW:			PKG. NO. 108 / SHEET 20
DATE: 10/94		NAME OF PARK	OF 43

8/24/01 13:00 C.EVERMAN R15 S:\SYM\USER\NPS10\FINAL-SET\ARCH\A3.DWG

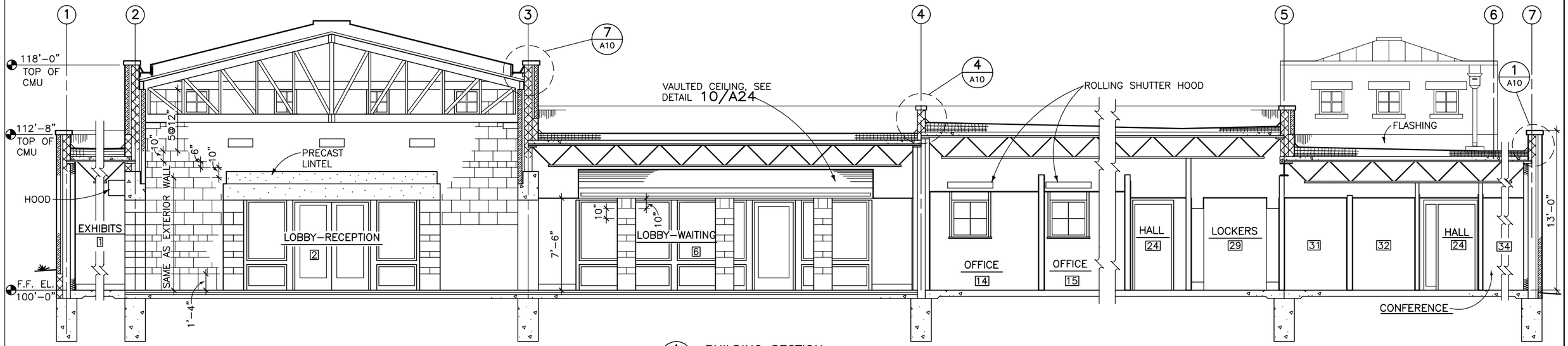

A / A4 BUILDING SECTION

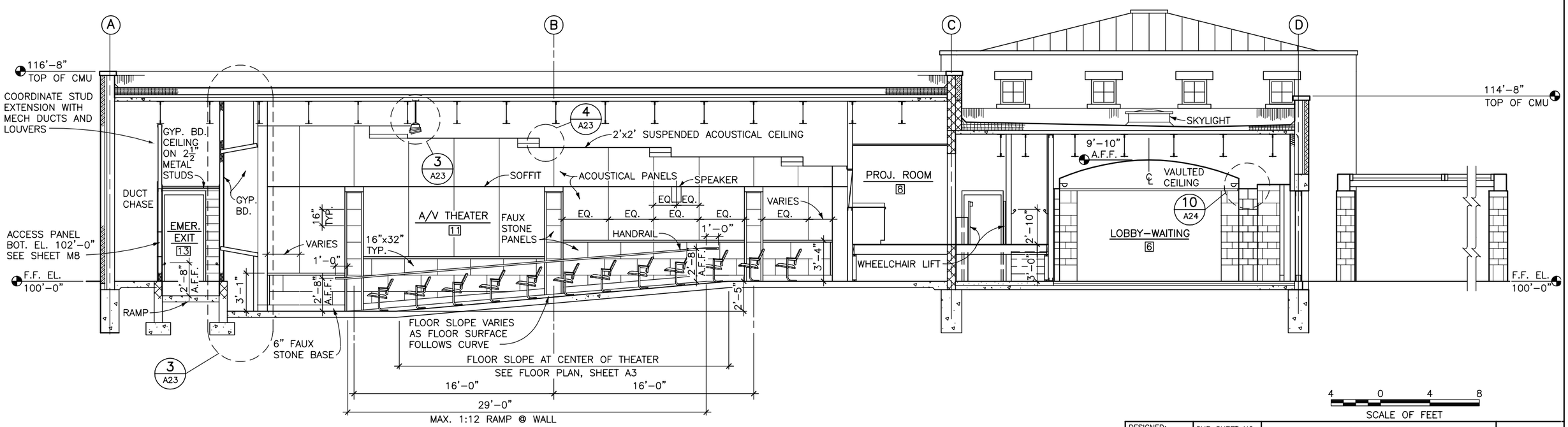

B / A4 SECTION THRU THEATER AND LOBBY

NOTES

1. CENTER PILASTER IS LOCATED ON COLUMN LINE "B"
2. SEE A/V THEATER ELEVATION V/A22, FOR ADDITIONAL DIMENSIONS AND NOTATIONS

4 0 4 8
SCALE OF FEET

DESIGNED: TREANTS K. COPELAND GADD A. CAMPBELL TECH. REVIEW: DATE: 10/94	SUB SHEET NO. A4	TITLE OF SHEET SAMPLE SECTIONS NAME OF PARK	DRAWING NO. 999 41,001 PKG. NO. 108 SHEET 21 OF 43

8/10/01 13:02 C.EVERMAN R15 S:\SYM\USER\NPS10\FINAL-SET\ARCH\A4.DWG

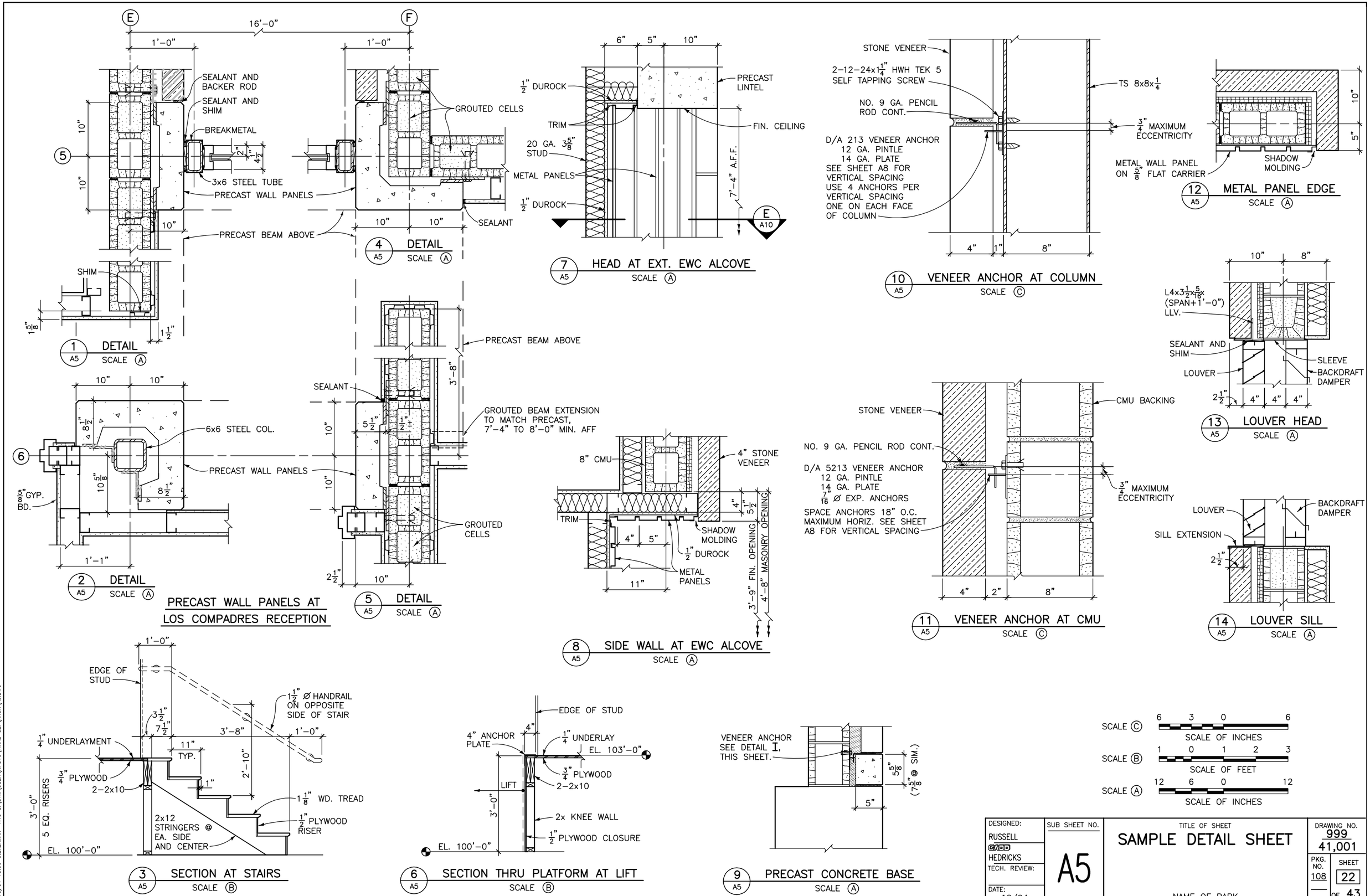
E
F
16'-0"
1'-0"
1'-0"
SEALANT AND BACKER ROD
SEALANT AND SHIM
BREAKMETAL
3x6 STEEL TUBE
PRECAST WALL PANELS
PRECAST BEAM ABOVE
SHIM
GROUTED CELLS
SEALANT
1 DETAIL A5 SCALE A
4 DETAIL A5 SCALE A
1/2" DUROCK
TRIM
20 GA. 3 5/8" STUD
METAL PANELS
1/2" DUROCK
PRECAST LINTEL
FIN. CEILING
7'-4" A.F.F.
E A10
7 HEAD AT EXT. EWC ALCOVE A5 SCALE A
STONE VENEER
2-12-24x1 1/4" HWH TEK 5 SELF TAPPING SCREW
NO. 9 GA. PENCIL ROD CONT.
D/A 213 VENEER ANCHOR
12 GA. PINTLE
14 GA. PLATE
SEE SHEET A8 FOR VERTICAL SPACING
USE 4 ANCHORS PER VERTICAL SPACING
ONE ON EACH FACE OF COLUMN
TS 8x8x1/4
3/4" MAXIMUM ECCENTRICITY
10 VENEER ANCHOR AT COLUMN A5 SCALE C
METAL WALL PANEL ON 5/8" FLAT CARRIER
SHADOW MOLDING
12 METAL PANEL EDGE A5 SCALE A
L4x3 1/2x5/16x (SPAN+1'-0") LLV.
SEALANT AND SHIM
LOUVER
SLEEVE
BACKDRAFT DAMPER
13 LOUVER HEAD A5 SCALE A
6x6 STEEL COL.
PRECAST WALL PANELS
5/8" GYP. BD.
2 DETAIL A5 SCALE A
PRECAST WALL PANELS AT LOS COMPADRES RECEPTION
PRECAST BEAM ABOVE
SEALANT
GROUTED BEAM EXTENSION TO MATCH PRECAST, 7'-4" TO 8'-0" MIN. AFF
GROUTED CELLS
5 DETAIL A5 SCALE A
8" CMU
4" STONE VENEER
TRIM
SHADOW MOLDING
1/2" DUROCK
METAL PANELS
3'-9" FIN. OPENING
4'-8" MASONRY OPENING
8 SIDE WALL AT EWC ALCOVE A5 SCALE A
STONE VENEER
CMU BACKING
NO. 9 GA. PENCIL ROD CONT.
D/A 5213 VENEER ANCHOR
12 GA. PINTLE
14 GA. PLATE
7/16" Ø EXP. ANCHORS
SPACE ANCHORS 18" O.C. MAXIMUM HORIZ. SEE SHEET A8 FOR VERTICAL SPACING
3/4" MAXIMUM ECCENTRICITY
11 VENEER ANCHOR AT CMU A5 SCALE C
LOUVER
BACKDRAFT DAMPER
SILL EXTENSION
14 LOUVER SILL A5 SCALE A
EDGE OF STUD
1 1/2" Ø HANDRAIL ON OPPOSITE SIDE OF STAIR
1/4" UNDERLAYMENT
3/4" PLYWOOD
2-2x10
11" TYP.
2'-10"
1 1/8" WD. TREAD
1/2" PLYWOOD RISER
2x12 STRINGERS @ EA. SIDE AND CENTER
3'-0" 5 EQ. RISERS
EL. 100'-0"
3 SECTION AT STAIRS A5 SCALE B
EDGE OF STUD
4" ANCHOR PLATE
1/4" UNDERLAY
EL. 103'-0"
3/4" PLYWOOD
2-2x10
LIFT
2x KNEE WALL
1/2" PLYWOOD CLOSURE
EL. 100'-0"
6 SECTION THRU PLATFORM AT LIFT A5 SCALE B
VENEER ANCHOR SEE DETAIL I, THIS SHEET.
5 5/8" (7 5/8" @ SIM.)
9 PRECAST CONCRETE BASE A5 SCALE A
SCALE C 6 3 0 6 SCALE OF INCHES
SCALE B 1 0 1 2 3 SCALE OF FEET
SCALE A 12 6 0 12 SCALE OF INCHES
DESIGNED: RUSSELL
CADD HEDRICKS
TECH. REVIEW:
DATE: 10/94
SUB SHEET NO. A5
TITLE OF SHEET SAMPLE DETAIL SHEET
NAME OF PARK
DRAWING NO. 999 41,001
PKG. NO. 108
SHEET 22 OF 43
8/10/01 13:06 C:\EVERMAN R15 S:\SYM\USER\NPS10\FINAL-SET\ARCH\A5.DWG

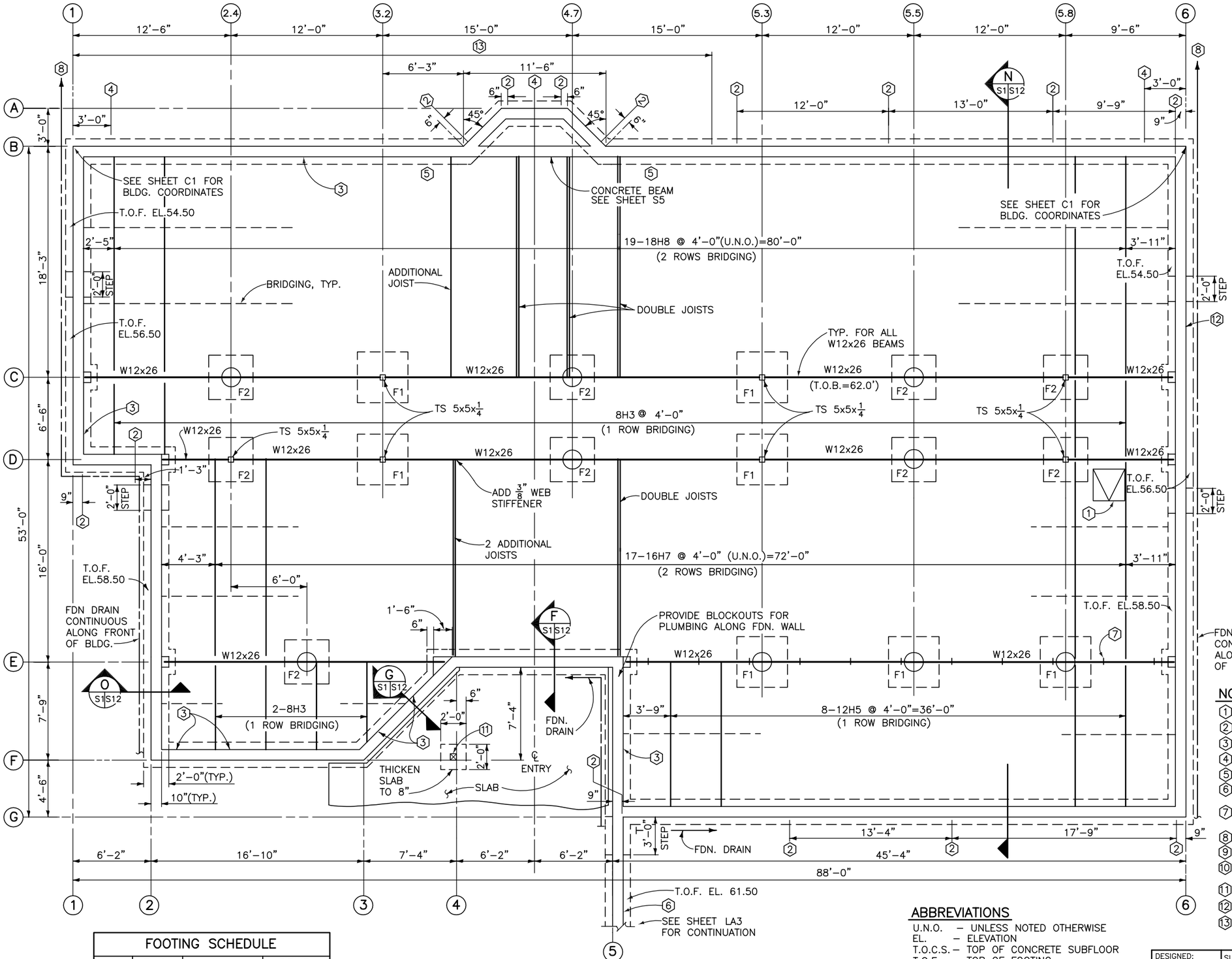

GENERAL NOTES

1. DESIGN LIVE LOADS – 1991 UBC
   A. ROOF: 30 PSF
   B. WIND: EFFECTIVE VELOCITY PRESSURE 10 PSF (80 MPH, EXP. C)
   C. FLOORS: 100 PSF
2. FOUNDATION
   A. DESIGN SOIL BEARING PRESSURE: 2500 PSF
   B. FOOTINGS SHALL BEAR ON UNDISTURBED SOIL OR GRANULAR FILL COMPACTED TO 98% OF MAXIMUM DENSITY.
3. CONCRETE
   A. CONCRETE SHALL HAVE A MINIMUM COMPRESSIVE STRENGTH OF 4000 PSI AT 28 DAYS.
   B. REINFORCING STEEL SHALL MEET THE REQUIREMENTS OF ASTM A615, GRADE 60. DO NOT WELD OR REBEND REINFORCING BARS. REINFORCEMENT SHALL BE DETAILED, FABRICATED AND PLACED IN ACCORDANCE WITH ACI 315 AND 318–89.
   C. CONCRETE COVER SHALL BE ACCORDING TO ACI 318–89 OR AS SHOWN.
   D. REINFORCING SPLICES SHALL BE AS FOLLOWS OR AS SHOWN.
      #5–2'–2"
      #7–3'–3"
      #9–5'–5"
4. STEEL
   A. STRUCTURAL STEEL: ASTM A36
   B. TUBULAR STEEL: ASTM A500, GRADE B.
   C. STANDARD BOLTS, ANCHOR BOLTS AND LAG SCREWS: ASTM. A307
   D. GALVANIZING: ALL STEELWORK EXPOSED TO WEATHER SHALL BE HOT–DIPPED GALVANIZED AFTER FABRICATION IN ACCORDANCE WITH ASTM A123 OR ASTM A153.
5. TIMBER
   A. FRAMING LUMBER: SOUTHERN PINE SELECT STRUCTURAL
   B. GLUED LAMINATED TIMBER:
      1. BEAMS: COMBINATION SYMBOL 24F, Fb=2400 PSI, Fv=200 PSI.
      2. COLUMNS AND TRUSS MEMBERS: COMBINATION SYMBOL 50, Fc=2300 PSI, Ft=1550 PSI.
   C. PLYWOOD NAILING SCHEDULE:
      1. ROOF SHEATHING; 8d COMMON NAILS AT 6 INCHES ON CENTER AT DIAPHRAGM BOUNDARIES AND ALL OTHER PLYWOOD PANEL EDGES, 12 INCHES ON CENTER ALONG INTERMEDIATE FRAMING MEMBERS. BLOCKING SHALL BE PROVIDED AT ALL PLYWOOD PANEL EDGES.
      2. WALL SHEATHING; 10d COMMON NAILS AT 4 INCHES ON CENTER AT PLYWOOD PANEL EDGES, 12INCHES ON CENTER ALONG INTERMEDIATE FRAMING MEMBERS
      3. FLOOR SHEATHING; 8d COMMON NAILS AT 6 INCHES ON CENTER AT DIAPHRAGM BOUNDARIES AND ALL OTHER PLYWOOD PANEL EDGES, 10 INCHES ON CENTER ALONG INTERMEDIATE FRAMING MEMBERS.

NOTES

1. BILCO TYPE Q–2 (30"x30") FLOOR DOOR OR APPROVED EQUAL.
2. ℄ OF EMBEDDED ANGLE – SEE DETAIL 5/S12
3. BLOCK OUT FOR SPRINKLER RISER IN FDN. AND DECK.
4. ℄ OF THRU WALL FDN VENT – SEE SECTION Q/S12
5. DEPRESSED CONCRETE DECK THIS AREA. SEE SHEET S12.
6. EXTERIOR WALL – PLACE MONOLITHICALLY WITH BLDG. FDN WALLS – SEE DETAIL 10/S12
7. ADD 2.5 VS1 x 6" SPACER OR APPROVED EQUAL @ 4'–0" O.C. UNDER BRG. WALL BETWEEN (5) AND (6)
8. 6" ϕ FOUNDATION DRAIN TO DAYLIGHT.
9. WIDEN WALK 3" FOR COLUMN. SEE DETAIL 11/S12
10. 4" FDN. WALL STUB OUT WITH 1/2" EXP. JT. TO RETAINING WALL WITH #4 DOWELS @ 10" O.C. VERT. EXP. JT. CARRIED THRU STONEWORK.
11. 6x6 COLUMN – SEE DETAIL 11/S12 (SIMILAR)
12. BLOCK OUT FOR MECHANICAL – SEE ELEV. P/S12
13. A.B. EMBEDMENT @ 3'–6" O.C. FOR DECK SEE SHEET S12.

FOOTING SCHEDULE

MK	THICK	SIZE	REINF.
F1	1'–0"	4'–0"x4'–0"	6–#5 E.W.
F2	↓	3'–6"x3'–6"	↓

ABBREVIATIONS

U.N.O. – UNLESS NOTED OTHERWISE
EL. – ELEVATION
T.O.C.S. – TOP OF CONCRETE SUBFLOOR
T.O.F. – TOP OF FOOTING
T.O.S. – TOP OF SLAB
FDN. – FOUNDATION
FTG. – FOOTING
E.S. – EACH SIDE
CONT. – CONTINUOUS
A.B. – ANCHOR BOLT
T.O.B. – TOP OF BEAM

FOUNDATION AND FLOOR FRAMING PLAN

4 0 4 8
SCALE OF FEET

DESIGNED: J. SMITH	SUB SHEET NO.	TITLE OF SHEET	DRAWING NO. 999 41,001
CADD D. DAVIS	S1	SAMPLE FOUNDATION AND FLOOR FRAMING PLAN	PKG. NO. 108
TECH. REVIEW:			SHEET 23
DATE: 10/94		NAME OF PARK	OF 43

8/24/01 13:04 C.EVERMAN R15 S:\SYM\USER\NPS10\FINAL-SET\STRUC\S1.DWG

NOTES

1. REFERENCE EL. 100'–0"=SITE EL. 1234.00.
2. TOP OF FOOTING EL. 98'–0".
3. TOP OF FOUNDATION WALL INDICATED THUS: T.O.W. EL.
4. TOP OF CONCRETE SLAB EL. 99'–10".
5. FOR BRICK WALLS, PIERS AND PILASTERS, SEE ARCH. DRAWINGS

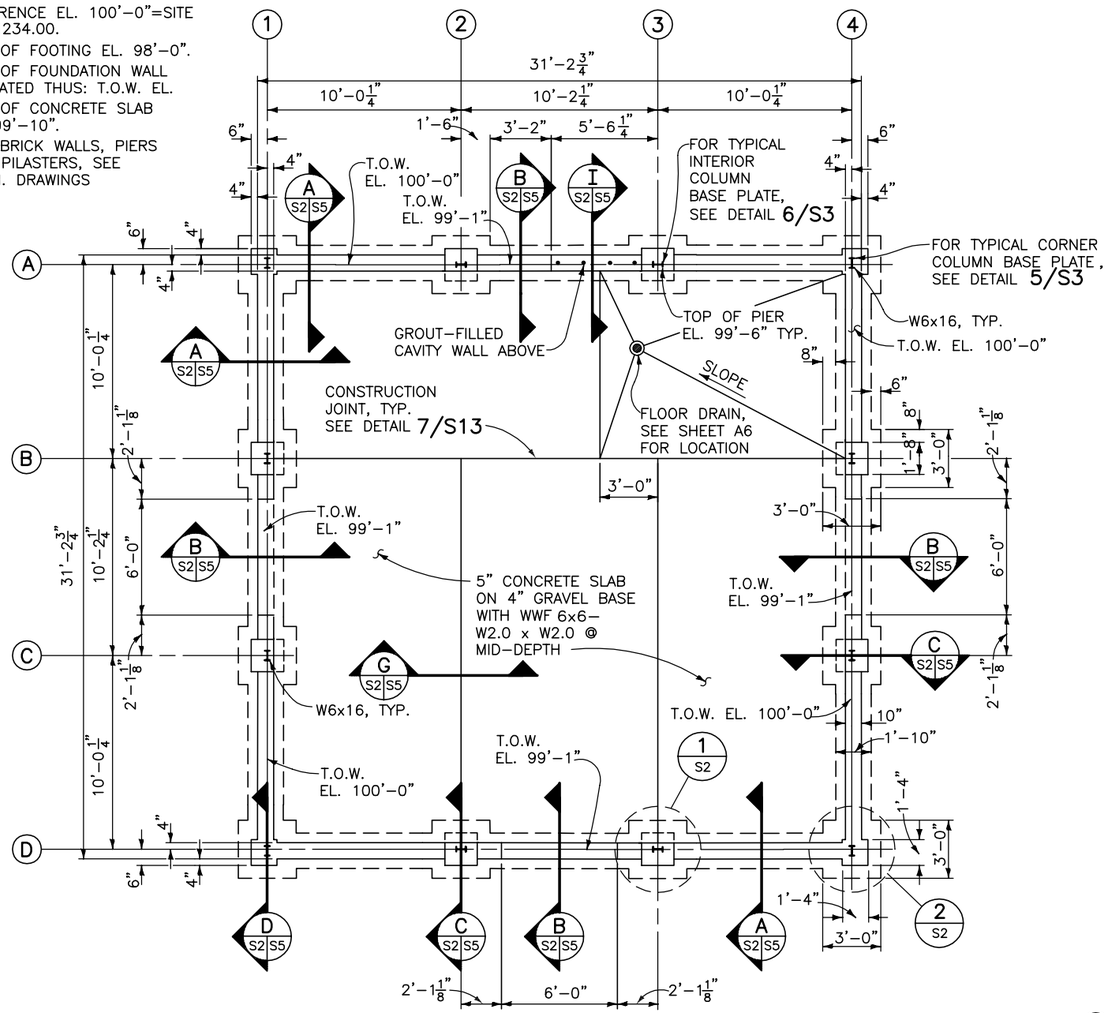

FOUNDATION PLAN
SCALE (A)

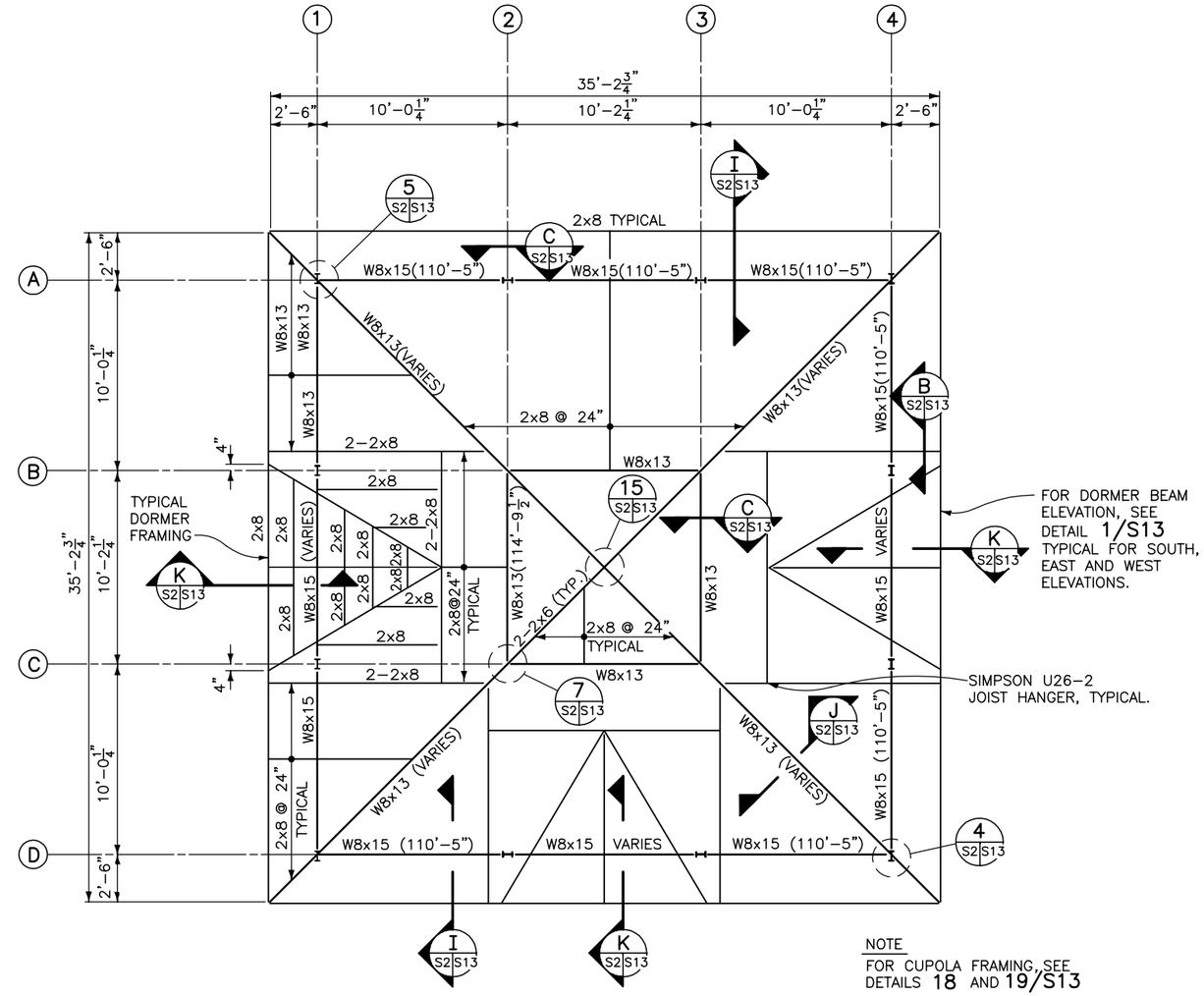

NOTE
FOR CUPOLA FRAMING, SEE DETAILS 18 AND 19/S13

ROOF FRAMING PLAN
SCALE (A)
TOP OF STEEL ELEVATION INDICATED THUS: ( )

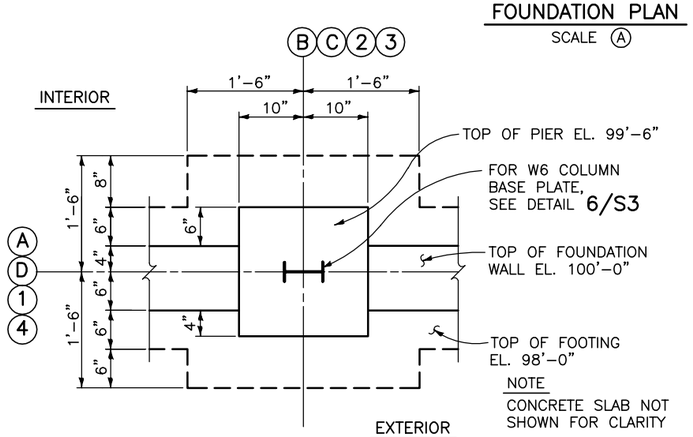

NOTE
CONCRETE SLAB NOT SHOWN FOR CLARITY

1/S2 CONCRETE PIER PLAN DETAIL
SCALE (B)

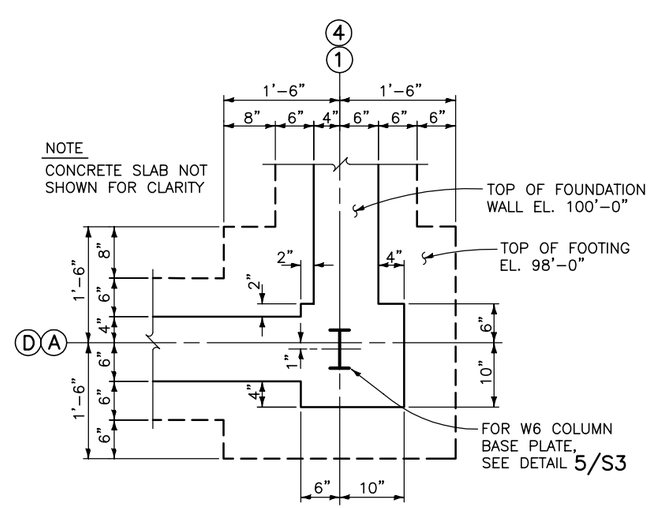

NOTE
CONCRETE SLAB NOT SHOWN FOR CLARITY

2/S2 CORNER COLUMN PLAN DETAIL
SCALE (B)

SCALE (B) 1 0 1 2 SCALE OF FEET
SCALE (A) 4 0 4 8 SCALE OF FEET

DESIGNED: J. SMITH	SUB SHEET NO.	TITLE OF SHEET	DRAWING NO. 999 / 41,001
CADD D. DAVIS	S2	SAMPLE FOUNDATION PLAN ROOF FRAMING PLAN	PKG. NO. 108 / SHEET 24
TECH. REVIEW:		NAME OF PARK	OF 43
DATE: 10/94			

8/24/01 13:06 C.EVERMAN R15 S:\SYM\USER\NPS10\FINAL-SET\STRUC\S2.DWG

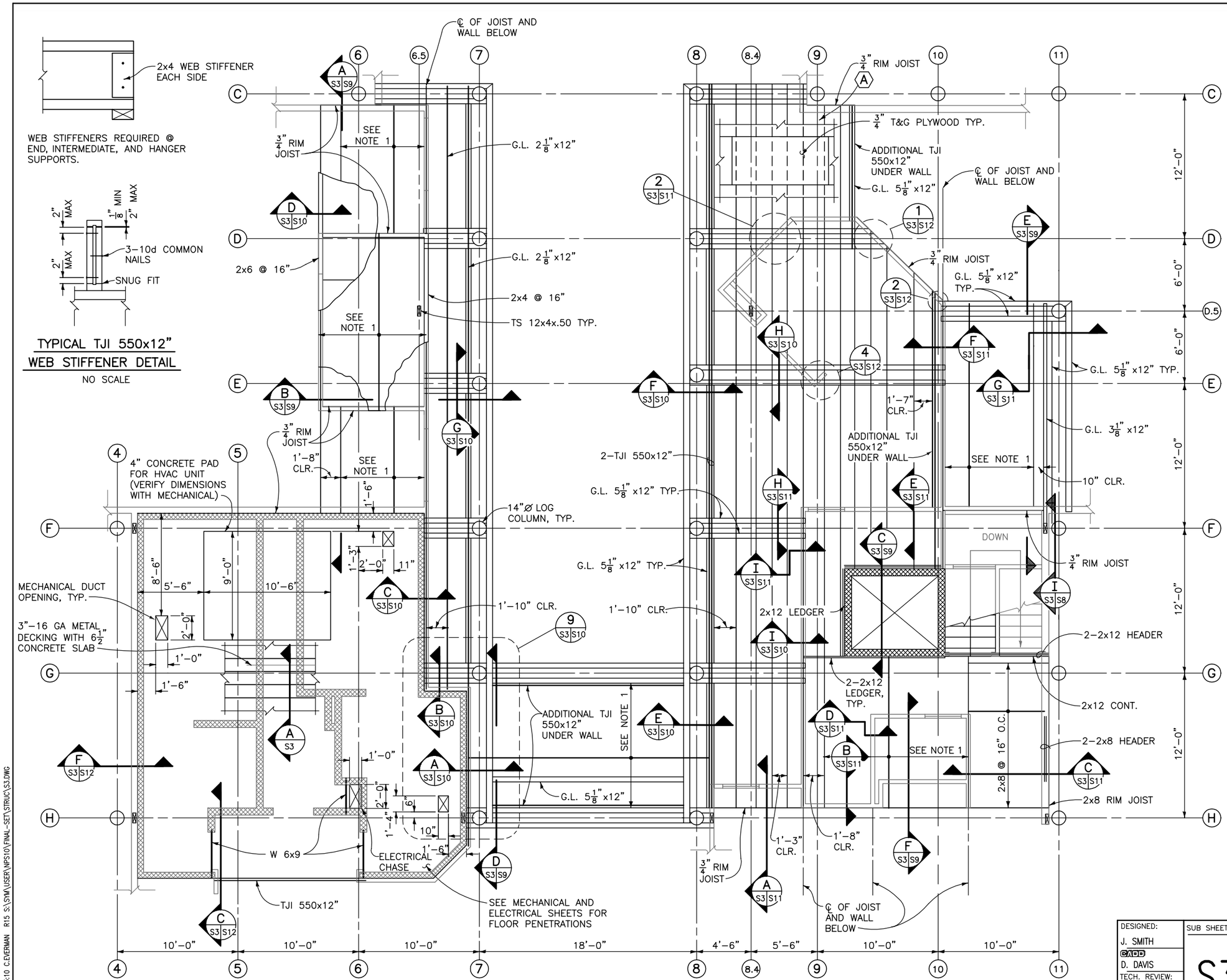

SECOND FLOOR FRAMING PLAN

METAL DECK

1. SEE SHEET S10 FOR REINFORCING DETAILS AT OPENINGS IN METAL DECK.
2. COMPOSITE METAL FLOOR DECK UNITS SHALL BE ANCHORED WITH 5/8" Ø PUDDLE WELDS 12" O.C. AT ALL SUPPORTING MEMBERS AND 18" O.C. AT SIDELAPS.
3. MINIMUM SECTION PROPERTIES:

GAUGE	S POS (IN^3/FT.)	S NEG (IN^3/FT.)	I (IN^3/FT.)
16	1.019	1.019	1.600

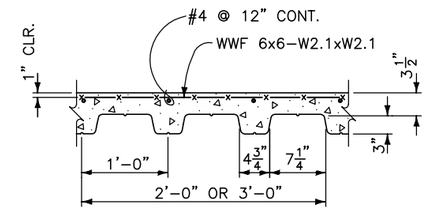

A / S3 SECTION
NO SCALE

PLYWOOD NAILING SCHEDULE

SCHEDULE	NAILS	NAIL SPACING (INCHES O.C.) DIAPHRAGM BOUNDARY AND PANEL EDGES	NAIL SPACING (INCHES O.C.) INTERMEDIATE SUPPORTS
A	8d	6	10
B	8d	3	12
C	8d	4	12
D	8d	6	12

FLOOR FRAMING

1. FLOOR JOISTS SHALL BE TJI 550x12" @ 16" UNLESS OTHERWISE NOTED.
2. COORDINATE CLEAR DISTANCES BETWEEN JOISTS WITH MECHANICAL AND ELECTRICAL.
3. FLOOR JOISTS SHALL BE CONTINUOUS.
4. 3/4" T&G PLYWOOD FLOOR SHEATHING SHALL BE GLUED AND NAILED IN ACCORDANCE WITH SCHEDULE A.

4 0 4 8
SCALE OF FEET

DESIGNED:	SUB SHEET NO.	TITLE OF SHEET	DRAWING NO.
J. SMITH DADD D. DAVIS TECH. REVIEW: DATE: 10/94	S3	SAMPLE SECOND FLOOR FRAMING PLAN NAME OF PARK	999 41,001 PKG. NO. 108 SHEET 25 OF 43

8/24/01 13:10 C.EVERMAN R15 S:\SYM\USER\NPS10\FINAL-SET\STRUC\S3.DWG

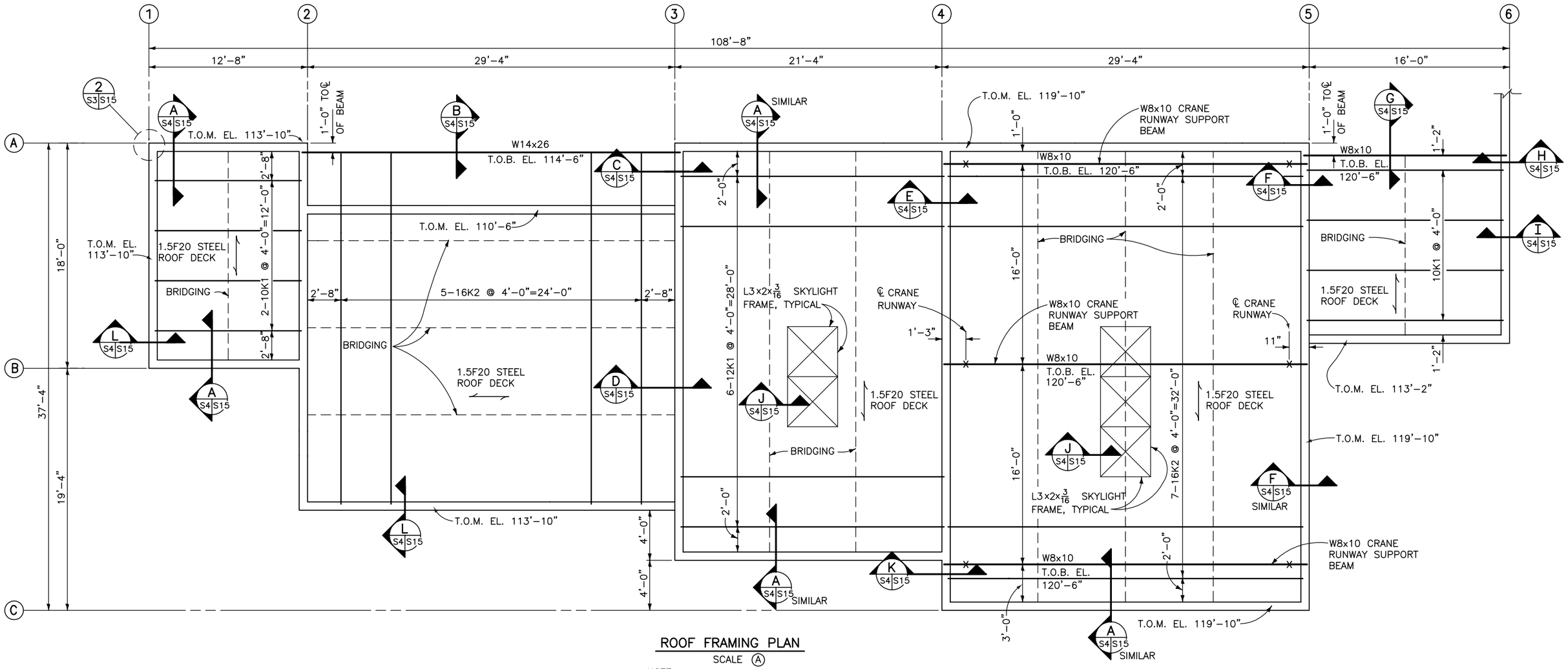

ROOF FRAMING PLAN

SCALE (A)

NOTE

FOR SKYLIGHT LOCATION AND DETAILS, SEE ARCHITECTURAL SHEETS.

MASONRY LINTEL SCHEDULE			
OPENING SIZE	LINTEL BLK. SIZE (NOM.)	REINFORCING	BEARING EACH END
3'-4" TO 6'-0"	8x8x16	2-#5	8" MINIMUM
MORE THAN 6'-0"	8x16x8	1-#5	16" MINIMUM

(WxHxL)

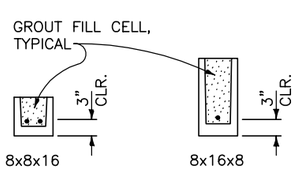

1 (S4|S5) LINTEL DETAILS

SCALE (B)

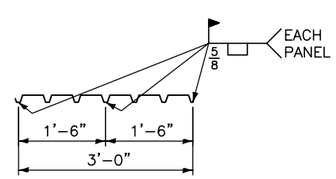

WELD EACH PANEL AS SHOWN.
ALSO, WELD SIDE LAPS @ 2'-0" O.C.

2 (S4|S5) DECK WELDING DETAIL

SCALE (B)

NOTE

REFERENCE ELEVATION 100'-0"= SITE ELEVATION 1234.00.

SCALE (B) 1 0 1 2 3 SCALE OF FEET

SCALE (A) 4 0 4 8 SCALE OF FEET

DESIGNED: J. SMITH	SUB SHEET NO.	TITLE OF SHEET	DRAWING NO.
CADD D. DAVIS	S4	SAMPLE ROOF FRAMING PLAN	999 41,001
TECH. REVIEW:			PKG. NO. 108
DATE: 10/94		NAME OF PARK	SHEET 26 OF 43

8/24/01 13:12 C:\EVERMAN R15 S:\SYM\USER\NPS10\FINAL-SET\STRUC\S4.DWG

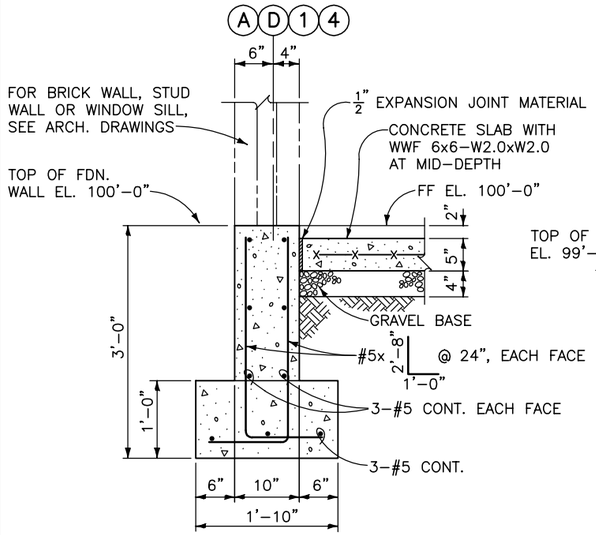

A S2 S5 FOUNDATION SECTION
SCALE A

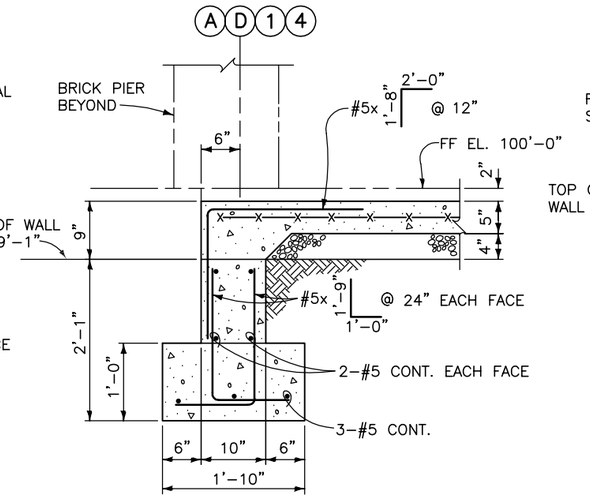

B S2 S5 FOUNDATION SECTION AT DOOR OPENING
SCALE A

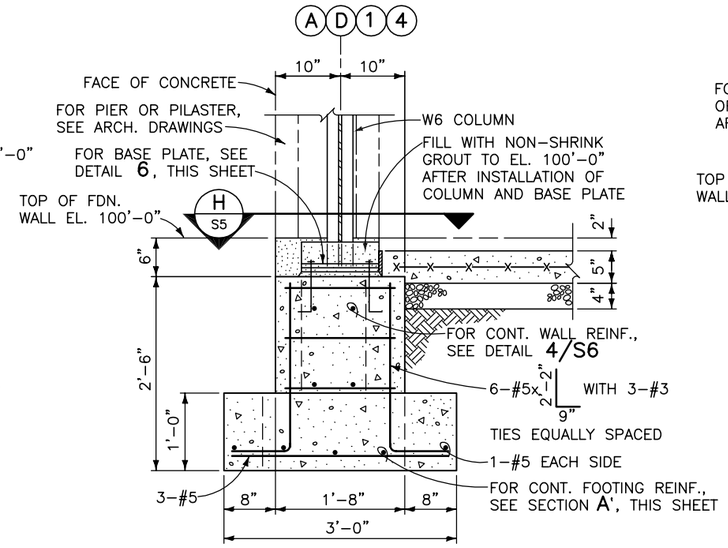

C S2 S5 FOUNDATION PIER SECTION
SCALE A

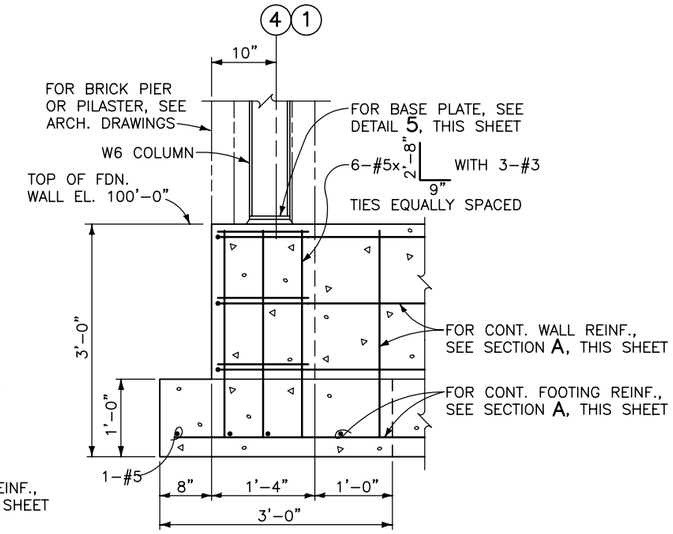

D S2 S5 CORNER FOUNDATION SECTION
SCALE A

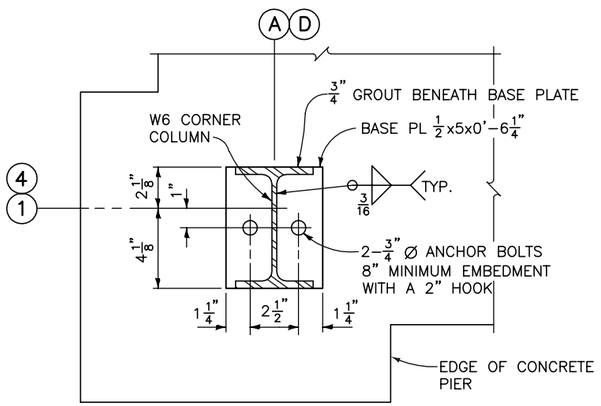

5 S2 S5 CORNER COLUMN BASE PLATE DETAIL
SCALE B

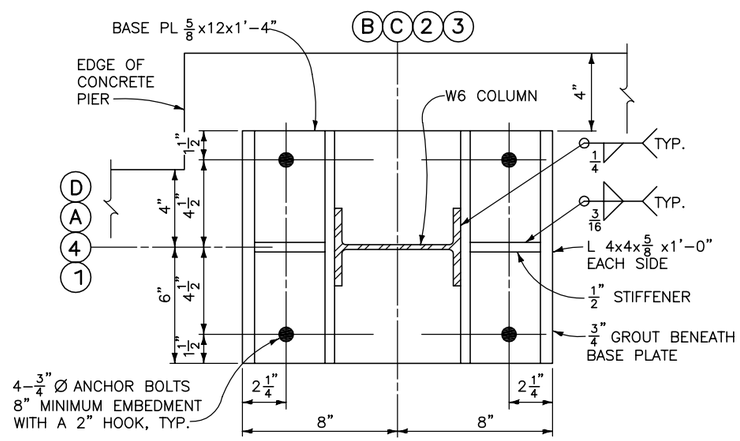

6 S2 S5 COLUMN BASE PLATE DETAIL
SCALE B

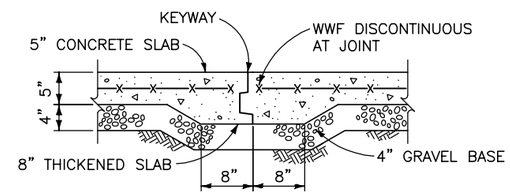

7 S2 S5 CONSTRUCTION JOINT DETAIL
SCALE A

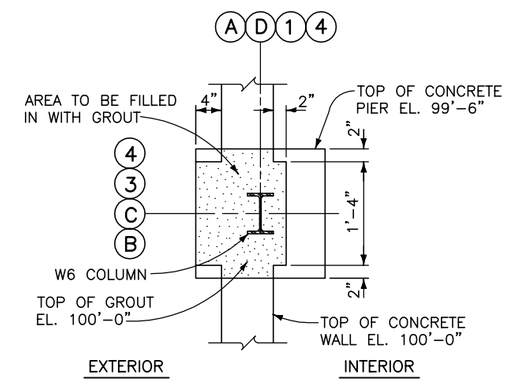

H S5 COLUMN GROUTING PLAN
SCALE A

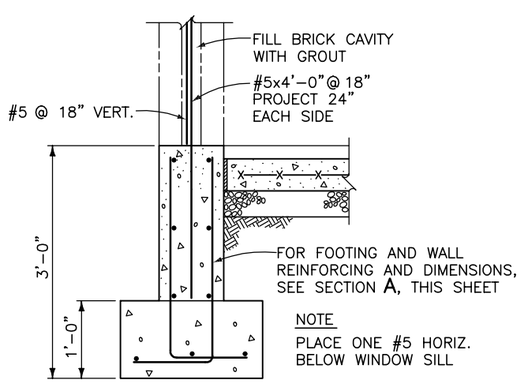

NOTE
PLACE ONE #5 HORIZ. BELOW WINDOW SILL

I S2 S5 FOUNDATION SECTION AT GROUT FILLED WALL
SCALE A

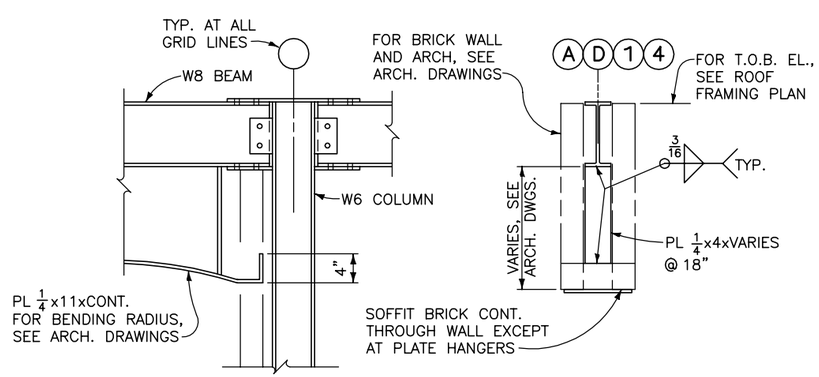

10 S2 S5 STEEL LINTEL DETAIL
SCALE A

SCALE B 6 3 0 6 SCALE OF INCHES
SCALE A 1 0 1 2 SCALE OF FEET

DESIGNED: J. SMITH	SUB SHEET NO.	TITLE OF SHEET	DRAWING NO. 999
CADD D. DAVIS	S5	SAMPLE FOUNDATION DETAILS	41,001
TECH. REVIEW:			PKG. NO. 108 / SHEET 27
DATE: 10/94		NAME OF PARK	OF 43

8/13/01 17:29 C.EVERMAN R15 S:\SYM\USER\NPS10\FINAL-SET\STRUC\S5.DWG

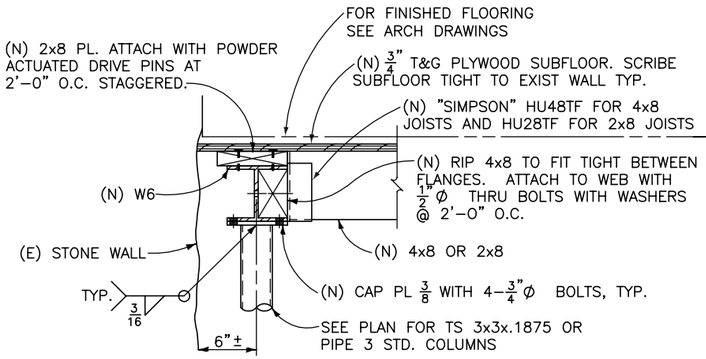

A S4 S6 SECTION

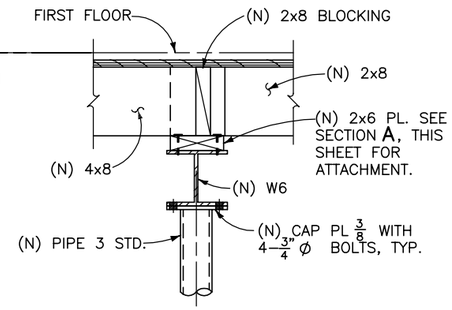

B S4 S6 SECTION

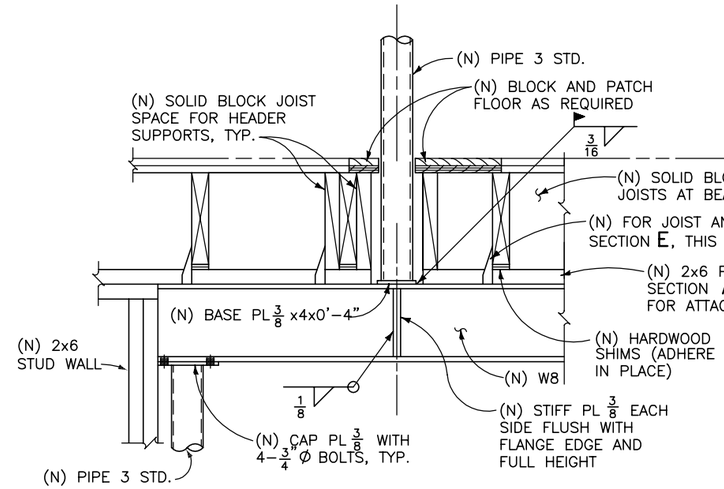

C S4 S6 SECTION

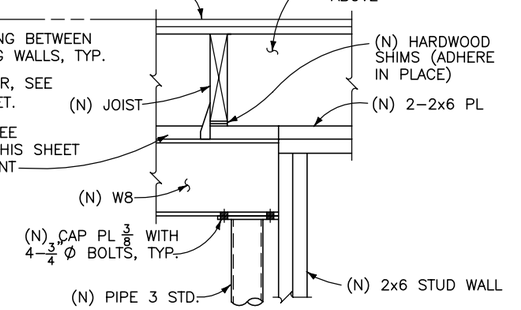

D S4 S6 SECTION

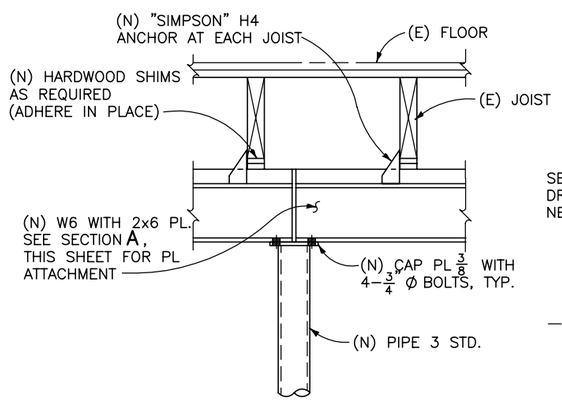

E S4 S6 SECTION

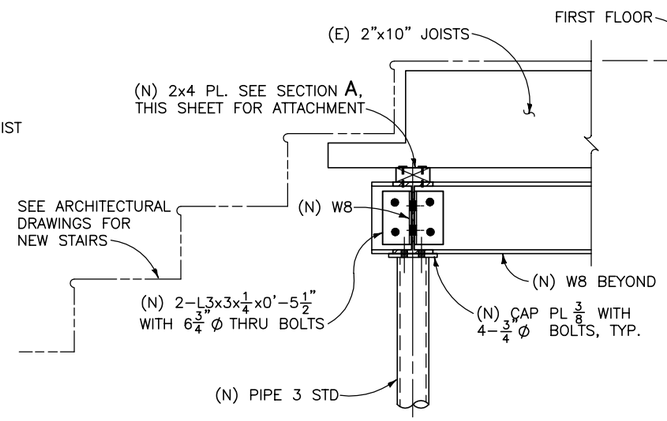

F S4 S6 SECTION

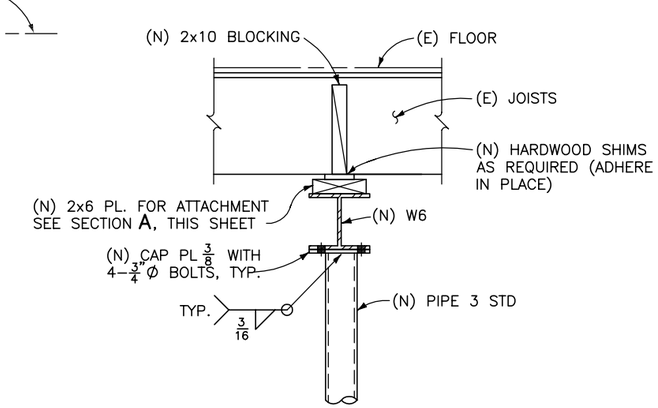

G S4 S6 SECTION

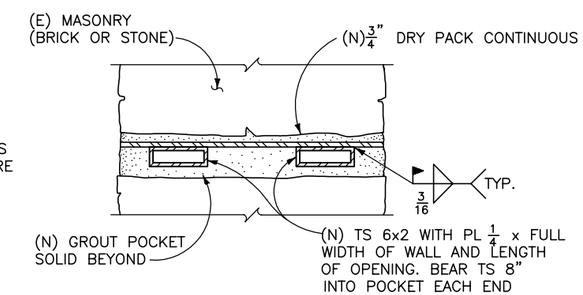

NOTE
AT DOOR 104, SEE DETAIL 3/A49 FOR TRIM AND NAILERS

H S4 S6 SECTION
NO SCALE

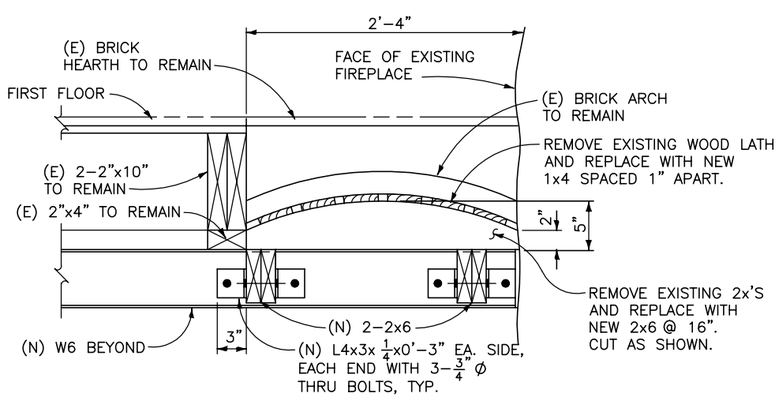

J S4 S6 SECTION

12 6 0 12
SCALE OF INCHES

DESIGNED: J. SMITH	SUB SHEET NO.	TITLE OF SHEET	DRAWING NO. 999 41,001
CADD D. DAVIS	S6	SAMPLE FIRST FLOOR FRAMING SECTIONS	PKG. NO. 108
TECH. REVIEW:			SHEET 28 OF 43
DATE: 10/94		NAME OF PARK	

8/24/01 13:13 C:EVERMAN R15 S:\SYM\USER\NPS10\FINAL-SET\STRUC\S6.DWG

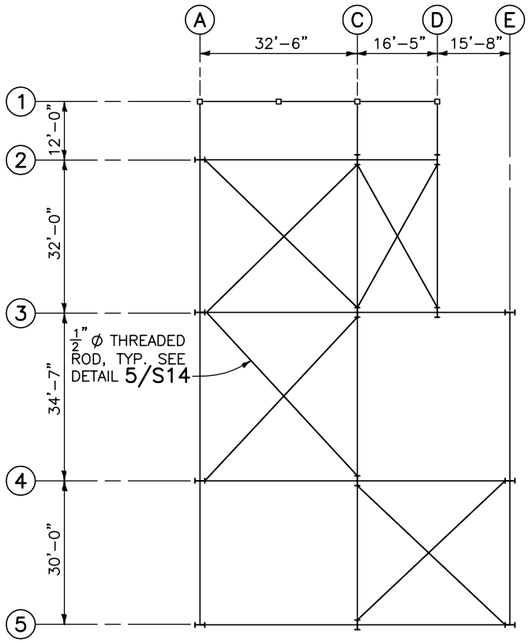

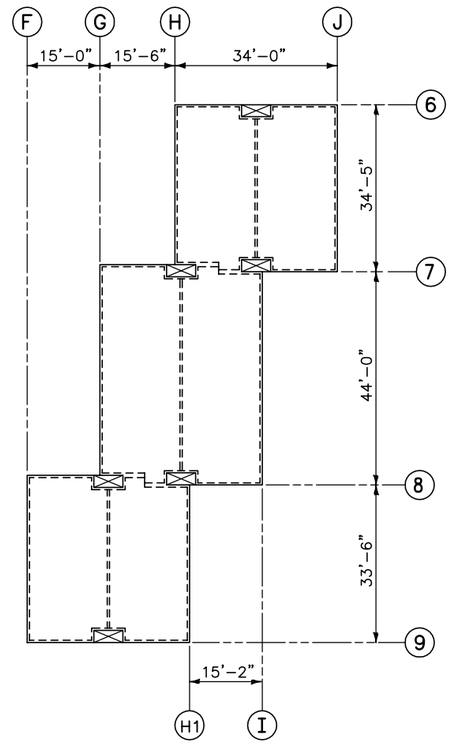

DIAGONAL ROOF BRACING AND DIAPHRAGM BOUNDARY PLAN

SCALE (A)

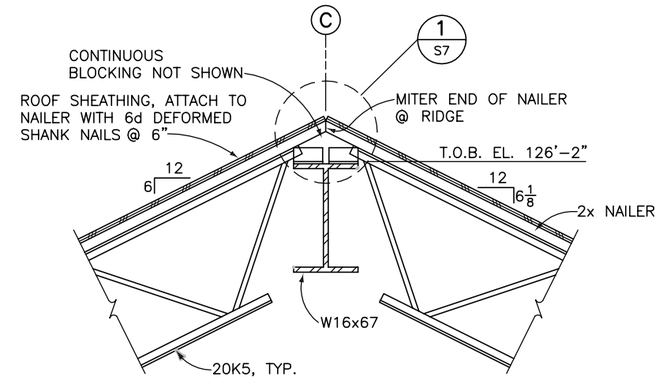

A / S2 S7 JOIST BEARING AT RIDGE SECTION

SCALE (B)

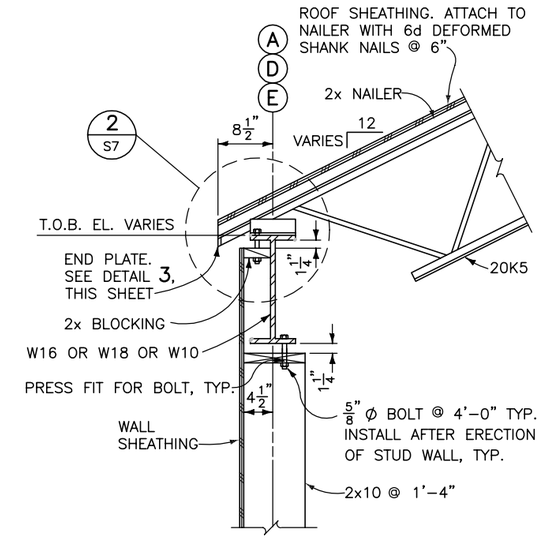

B / S2 S7 JOIST BEARING AT EAVE SECTION

SCALE (B)

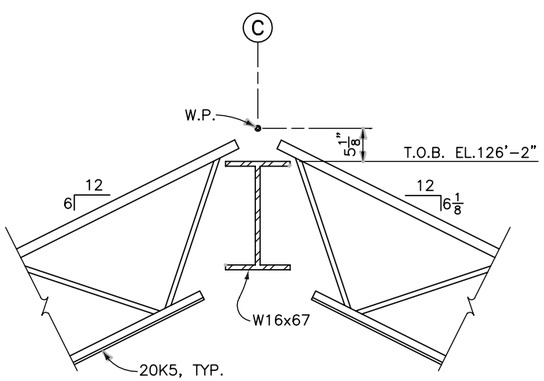

1 / S7 WORKING POINT AT RIDGE DETAIL

SCALE (B)

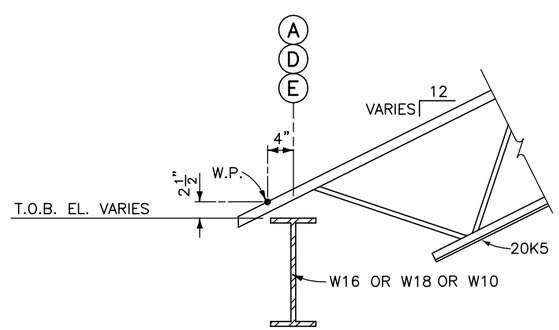

2 / S7 WORKING POINT AT EAVE DETAIL

SCALE (B)

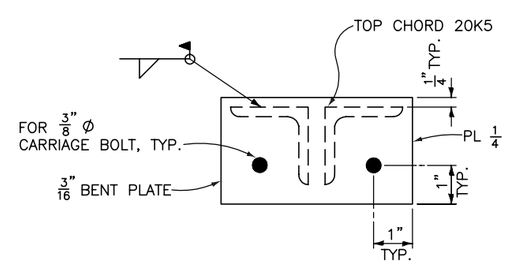

3 / S7 TYPICAL JOIST END PLATE DETAIL

SCALE (C)

SCALE (C) 2 0 2 4 SCALE OF INCHES

SCALE (B) 1 0 1 2 SCALE OF FEET

SCALE (A) 16 0 16 32 SCALE OF FEET

DESIGNED: J. SMITH CADD D. DAVIS TECH. REVIEW: DATE: 10/94	SUB SHEET NO. S7	TITLE OF SHEET SAMPLE ROOF BRACING AND DIAPHRAGM PLAN AND JOIST BEARING DETAILS NAME OF PARK	DRAWING NO. 999 41,001 PKG. NO. 108 SHEET 29 OF 43

MECHANICAL LEGEND

PIPING SYMBOLS

- CAP
- FCO — FLOOR CLEANOUT
- FD — FLOOR DRAIN
- GCO — GRADE CLEANOUT
- CO — CLEANOUT PLUG, IN LINE
- WCO — WALL CLEANOUT
- TEE, OUTLET UP
- TEE, OUTLET DOWN
- ELBOW, TURNED DOWN
- ELBOW, TURNED UP
- ELBOW, BASE
- EXPANSION JOINT
- FLEXIBLE CONNECTOR
- LATERAL
- REDUCER – CONCENTRIC
- REDUCER – ECCENTRIC
- SLEEVE – THROUGH WALL
- TEE – STRAIGHT
- TEE – SINGLE SWEEP
- ELBOW – 45°
- ELBOW – 90°
- UNION
- PUMP
- FUNNEL DRAIN
- HOSE CONNECTION
- ORIFICE PLATE
- STRAINER WITH BLOWDOWN AND HOSE CONNECTION
- SIGHT GLASS
- FS — FLOW SWITCH
- P/T — PRESSURE AND TEMPERATURE TAP
- M — FLUID METER
- THERMOMETER
- PRESSURE GAUGE
- PS — PRESSURE SWITCH
- THERMAL BULB
- S — AIR SEPARATOR
- VENTURI FLOW METER
- SA — SHOCK ARRESTOR
- AV — AIR VENT – AUTOMATIC
- MV — AIR VENT – MANUAL

- ANGLE GATE VALVE
- ANGLE GATE VALVE, PLAN
- ANGLE GLOBE VALVE
- ANGLE GLOBE VALVE, PLAN
- BFP — BACKFLOW PREVENTER
- BALL VALVE
- BUTTERFLY VALVE
- CHECK VALVE
- GATE VALVE
- GLOBE VALVE
- PLUG VALVE
- PRESSURE REDUCING VALVE
- RELIEF VALVE
- 3–WAY AUTOMATIC VALVE
- 2–WAY AUTOMATIC VALVE
- BALANCING VALVE
- OUTSIDE STEM AND YOKE VALVE
- OUTSIDE STEM AND YOKE VALVE WITH TAMPER SWITCH
- HB — HOSE BIBB
- WH — WALL HYDRANT

AIR CONDITIONING PIPING SYMBOLS

- CHS — CHILLED WATER SUPPLY
- CHR — CHILLED WATER RETURN
- C — CONDENSER WATER SUPPLY
- CR — CONDENSER WATER RETURN
- D — DRAIN
- RL — REFRIGERANT LIQUID
- RS — REFRIGERANT SUCTION
- DIRECTION OF FLOW

HEATING PIPING SYMBOLS

- BBD — BOILER BLOW DOWN
- A — COMPRESSED AIR
- VPD — VACUUM PUMP DISCHARGE
- FOS — FUEL–OIL SUPPLY
- FOR — FUEL–OIL RETURN
- FOV — FUEL–OIL VENT
- HWR — HEATING WATER RETURN
- HWS — HEATING WATER SUPPLY
- LPC — LOW–PRESSURE CONDENSATE
- LPS — LOW–PRESSURE STEAM

PLUMBING PIPING SYMBOLS

- COLD WATER
- A — COMPRESSED AIR
- DOMESTIC HOT WATER
- DOMESTIC HOT WATER RECIRCULATING
- F — FIRE
- G — GAS
- LPG — LP GAS
- WASTE (ABOVE GRADE)
- WASTE (BELOW GRADE)
- ST — STORM DRAIN
- VENT
- SLOPE DOWN IN DIRECTION OF ARROW

FIRE SPRINKLER SYMBOLS

- UPRIGHT SPRINKLER
- PENDANT SPRINKLER
- PENDANT SPRINKLER, WITH GUARD
- DRY PENDANT SPRINKLER
- SIDEWALL SPRINKLER
- ALARM CHECK VALVE
- DRY–PIPE VALVE
- FIRE DEPARTMENT CONNECTION

VENTILATION AND AIR CONDITIONING SYMBOLS

- SUPPLY DUCT UP
- SUPPLY DUCT DOWN
- RETURN OR EXHAUST DUCT UP
- RETURN OR EXHAUST DUCT DOWN
- 12x20 — DUCT (FIRST FIGURE, SIDE SHOWN AND SECOND FIGURE, SIDE NOT SHOWN) ALL DUCTS DIMENSIONS SHALL BE SHOWN IN INCHES.
- R — INCLINED RISE (R), ARROW IN DIRECTION OF AIR FLOW
- D — INCLINED DROP (D), ARROW IN DIRECTION OF AIR FLOW
- TRANSITIONS
- RECTANGULAR TO ROUND TRANSITION
- STANDARD RECTANGULAR BRANCH FOR SUPPLY OR RETURN
- RECTANGULAR DUCT ELBOW WITH TURNING VANES
- FLEXIBLE DUCT CONNECTION
- MANUAL VOLUME DAMPER
- AUTOMATIC DAMPER
- FIRE DAMPER WITH ACCESS DOOR
- BACKDRAFT DAMPER
- ROUND DUCT UP
- ROUND DUCT DOWN
- T — THERMOSTAT
- T_S — TEMPERATURE SENSOR
- H — HUMIDISTAT
- F_D — DUCT MOUNTED SMOKE DETECTOR
- 12x20 / 700 — TERMINAL DEVICE SIZE, TYP; SUPPLY RESISTER OR GRILLE, SIDE VIEW; TERMINAL DEVICE CFM, TYP
- 12x20 / 700 — RETURN OR EXHAUST GRILLE, SIDE VIEW
- 24x24 / 200 — SUPPLY DIFFUSER
- 3–48 / 250 — NUMBER OF SLOTS; SLOT DIFFUSER; SLOT DIFFUSER
- 8–12 / 250 — NECK DIAMETER; FACE DIAMETER; CFM; ROUND DUCT AND DIFFUSER

DESIGNER NOTE

LEGEND SHEET SHOULD INCLUDE ONLY SYMBOLS USED ON EACH SPECIFIC PROJECT.

DESIGNED: A. SMITH CADD A. RIMMER TECH. REVIEW: DATE: 10/94	SUB SHEET NO. M1	TITLE OF SHEET SAMPLE LEGEND NAME OF PARK	DRAWING NO. 999 41,001 PKG. NO. 108 SHEET 30 OF 43

8/17/01 14:33 C.EVERMAN R15 S:\SYM\USER\NPS10\FINAL-SET\MECH\M1.DWG

NOTES

1. ON FAN COIL UNITS FC–5, 6 AND 8, RETURN AIR SHALL BE THROUGH BOTTOM GRILLE INTEGRAL WITH ACCESS PANEL.
2. ON FAN COIL UNITS FC–1, 2 AND 3, RETURN AIR SHALL BE THROUGH BACK OF UNIT ABOVE CEILING.
3. A 24"Wx16"H NON–VISION DOOR GRILLE (DG) SHALL BE INTEGRAL WITH THE DOORS TO THE MENS AND WOMENS ROOMS, THE JANITORS ROOM, AND THE LUNCH ROOM. SEE DOOR SCHEDULE.
4. INSTALL DUCTWORK, AIR HANDLERS, AND FAN COIL UNITS ABOVE CEILING AND IN LOFT AND MEZZANINE AREAS AS SHOWN. SUSPEND FAN COIL UNITS FROM OVERHEAD STRUCTURE WITH VIBRATION ISOLATORS. AIR HANDLERS (AH–4, AH–7, MUA–1, MUA–2) SHALL BE MOUNTED WITH VIBRATION ISOLATORS ON MEZZANINE OR LOFT FLOOR WITHOUT CONCRETE PADS.
5. DUCT DIMENSIONS SHOWN ARE INSIDE CLEAR DIMENSIONS AND DO NOT INCLUDE LINER THICKNESS. ADD LINER THICKNESS TO DETERMINE OUTSIDE DUCT DIMENSION.
6. FOR FIRE DAMPER INSTALLATION, SEE DETAIL 10/M11

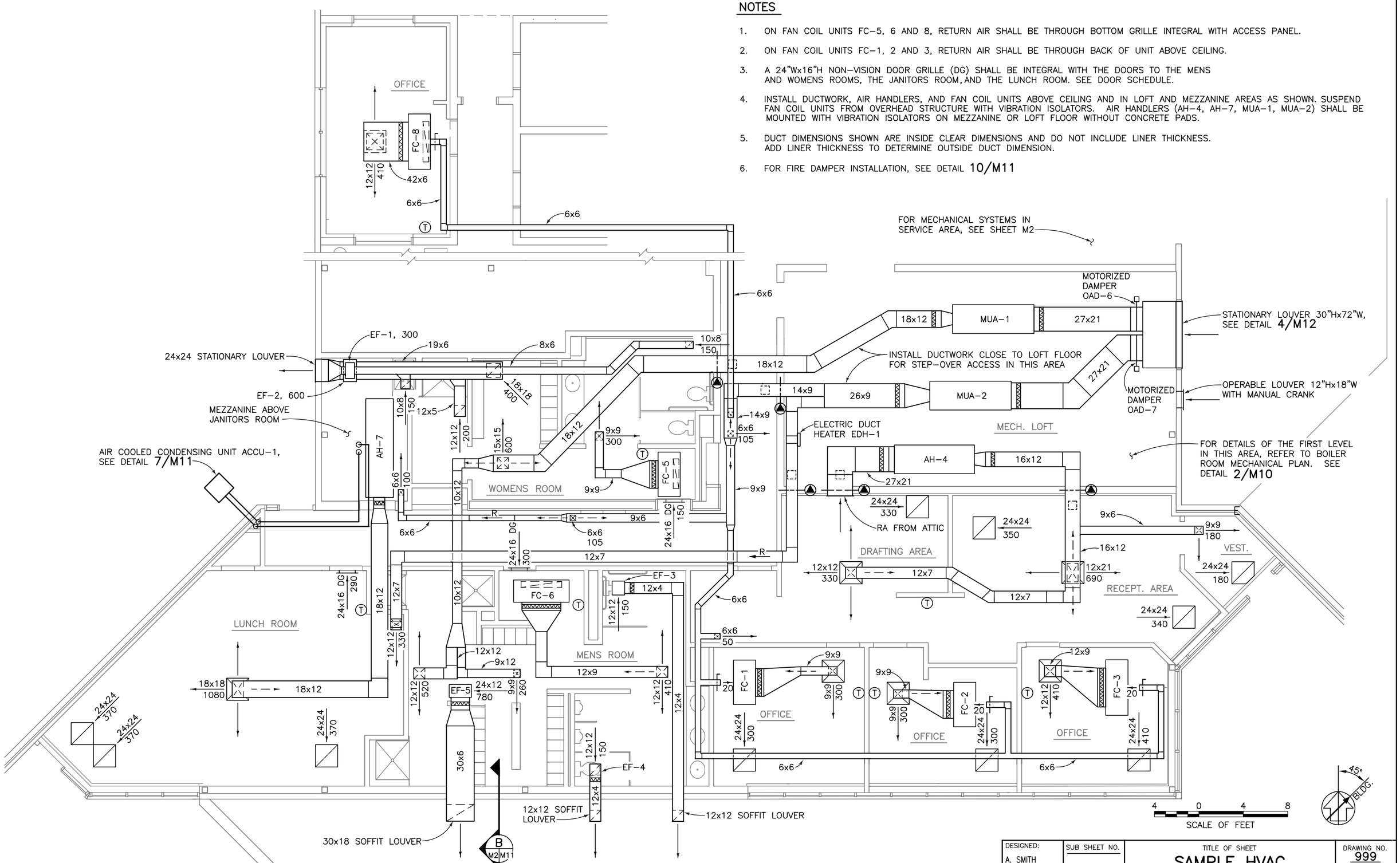

A / M2 HVAC FLOOR PLAN

DESIGNED: A. SMITH	SUB SHEET NO.	TITLE OF SHEET	DRAWING NO. 999 41,001
CADD J. KIRK	M2	SAMPLE HVAC FLOOR PLAN	PKG. NO. 108
TECH. REVIEW:			SHEET 31 OF 43
DATE: 10/94		NAME OF PARK	

8/17/01 15:08 C.EVERMAN R15 S:\SYM\USER\NPS10\FINAL-SET\MECH\M2.DWG

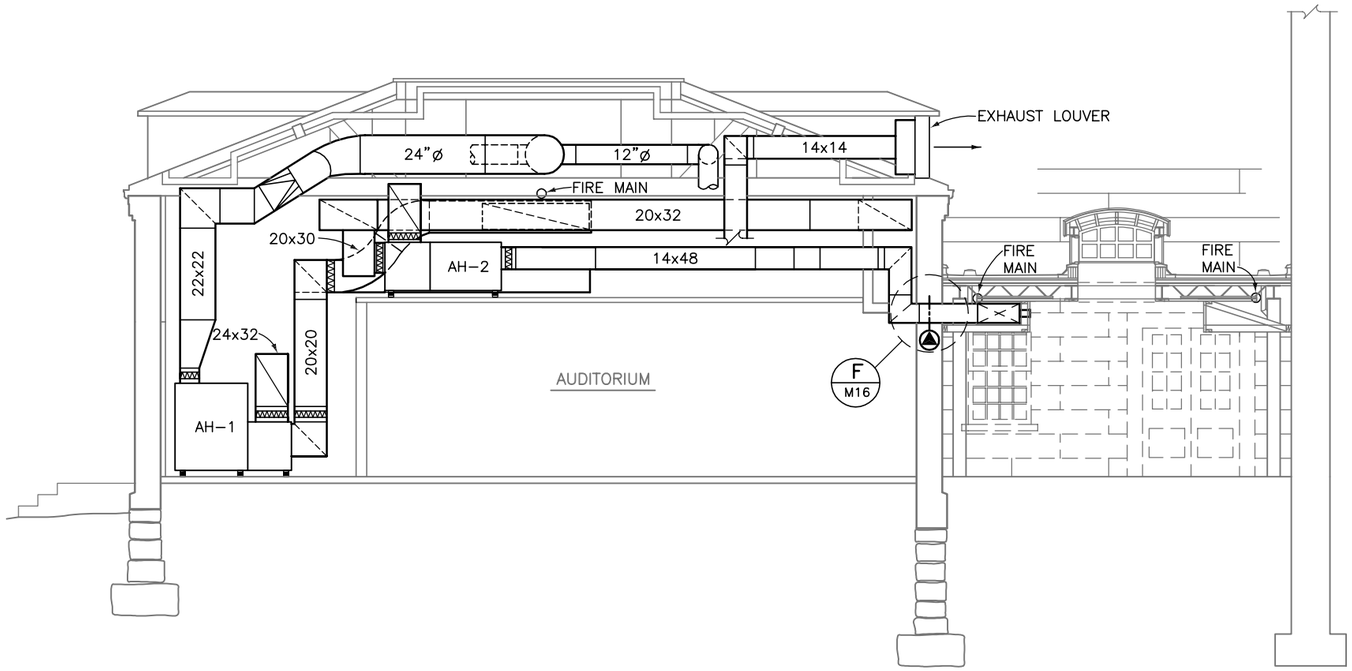

A M2 M3 BUILDING SECTION

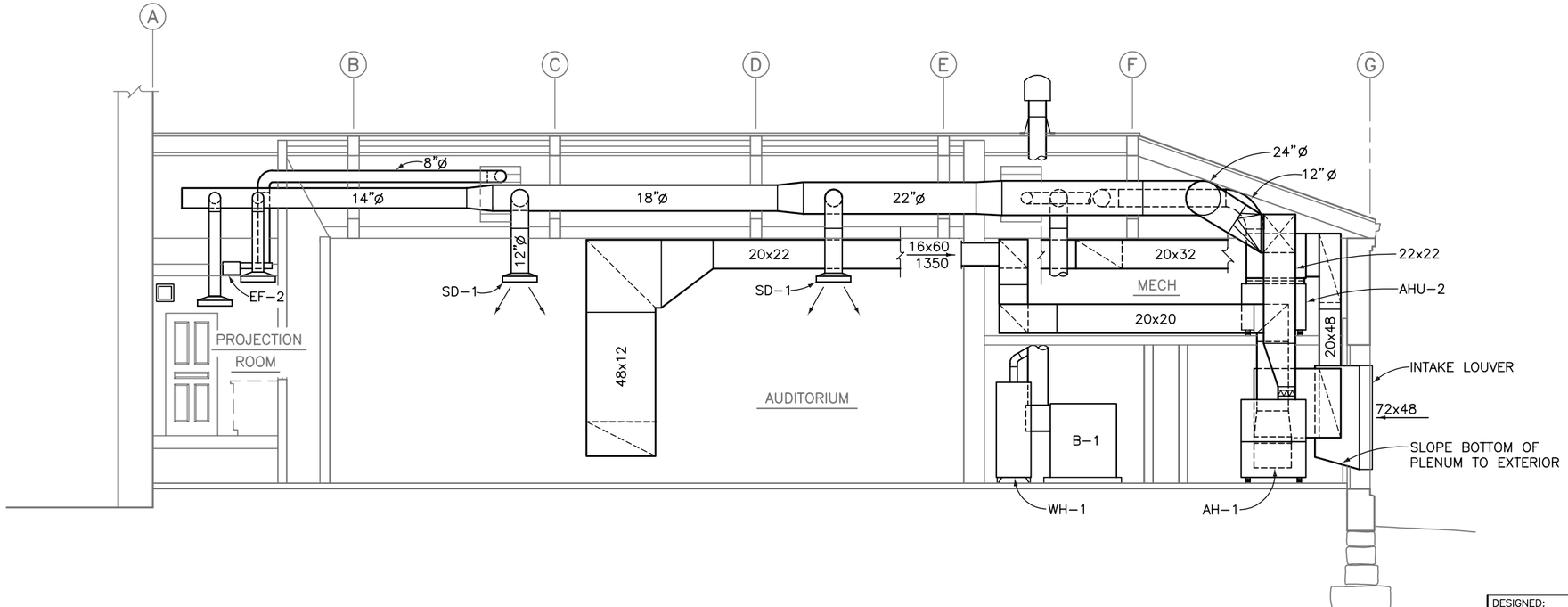

B M2 M3 BUILDING SECTION

4 0 4 8
SCALE OF FEET

DESIGNED: A. SMITH	SUB SHEET NO.	TITLE OF SHEET	DRAWING NO.
CADD J. KIRK	M3	SAMPLE HVAC SECTIONS	999 41,001
TECH. REVIEW:			PKG. NO. 108 / SHEET 32
DATE: 10/94		NAME OF PARK	OF 43

8/17/01 15:11 C:DEVERMAN R15 S:\SYM\USER\NPS10\FINAL-SET\MECH\M3.DWG

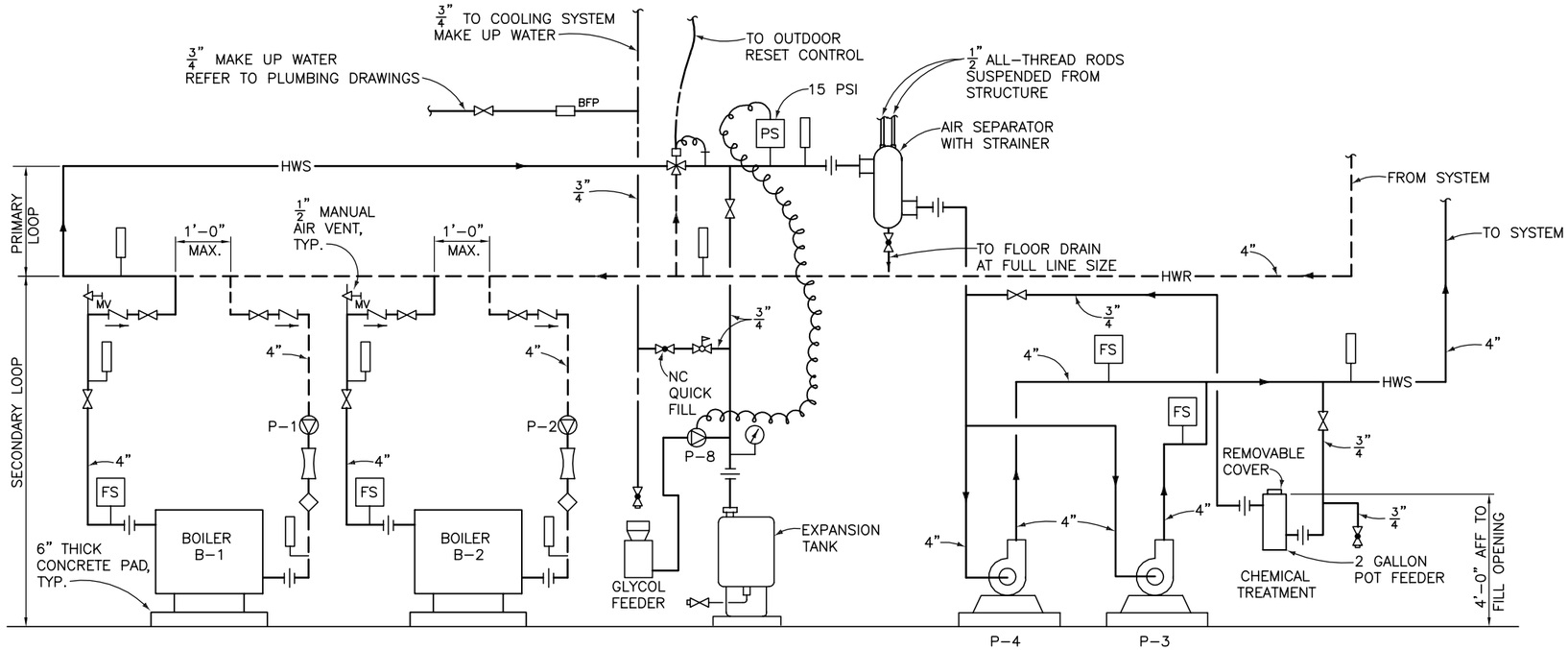

A / M4 CHILLED WATER FLOW DIAGRAM

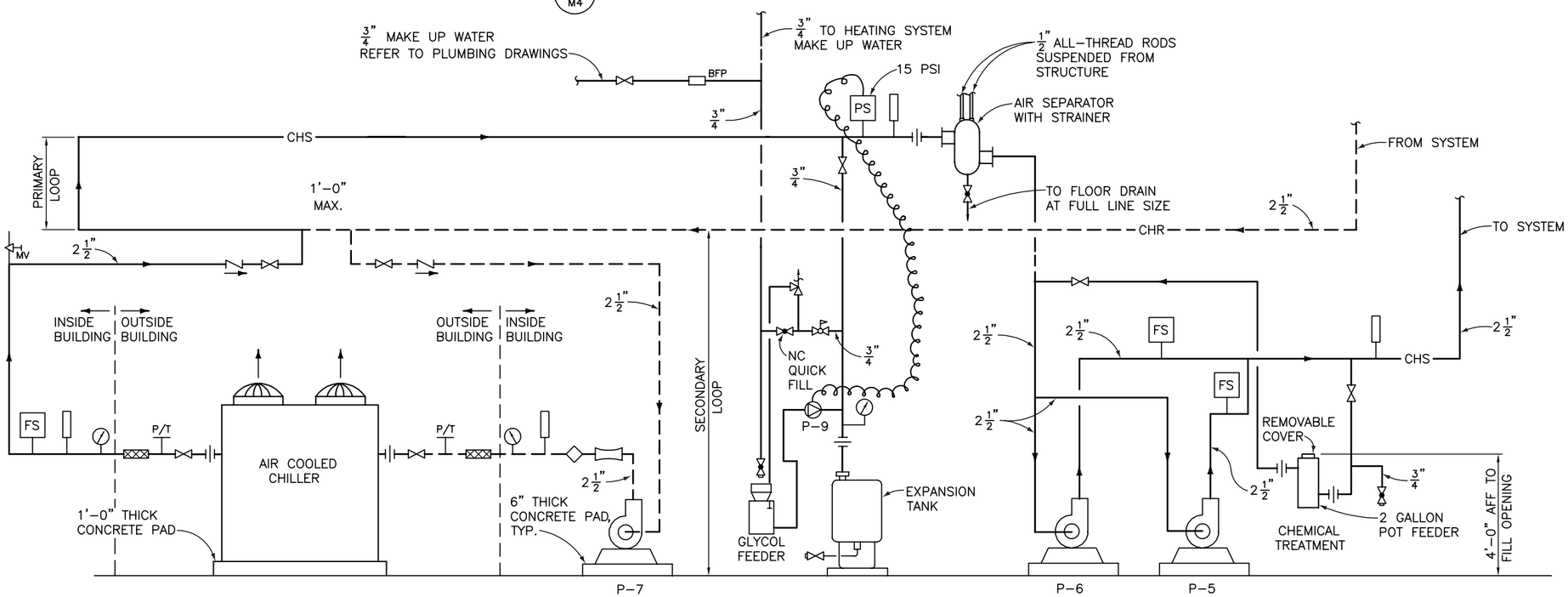

B / M4 CHILLED WATER FLOW DIAGRAM

NO SCALE

DESIGNED: A. SMITH	SUB SHEET NO.	TITLE OF SHEET	DRAWING NO. 999 / 41,001
CADD J. KIRK	M4	SAMPLE HVAC FLOW DIAGRAMS	PKG. NO. 108
TECH. REVIEW:			SHEET 33 OF 43
DATE: 10/94		NAME OF PARK	

8/24/01 13:17 C.EVERMAN R15 S:\SYM\USER\WPS10\FINAL-SET\MECH\M4.DWG

NOTE

HOSE RACK: PROVIDE A FIXTURE CAPABLE OF 50'-0" MINIMUM HOSE CAPACITY WITH AN EPOXY FINISH RESISTANT TO RUST. MOUNT FIXTURE SECURELY TO WALL LOCATED AS NOTED.

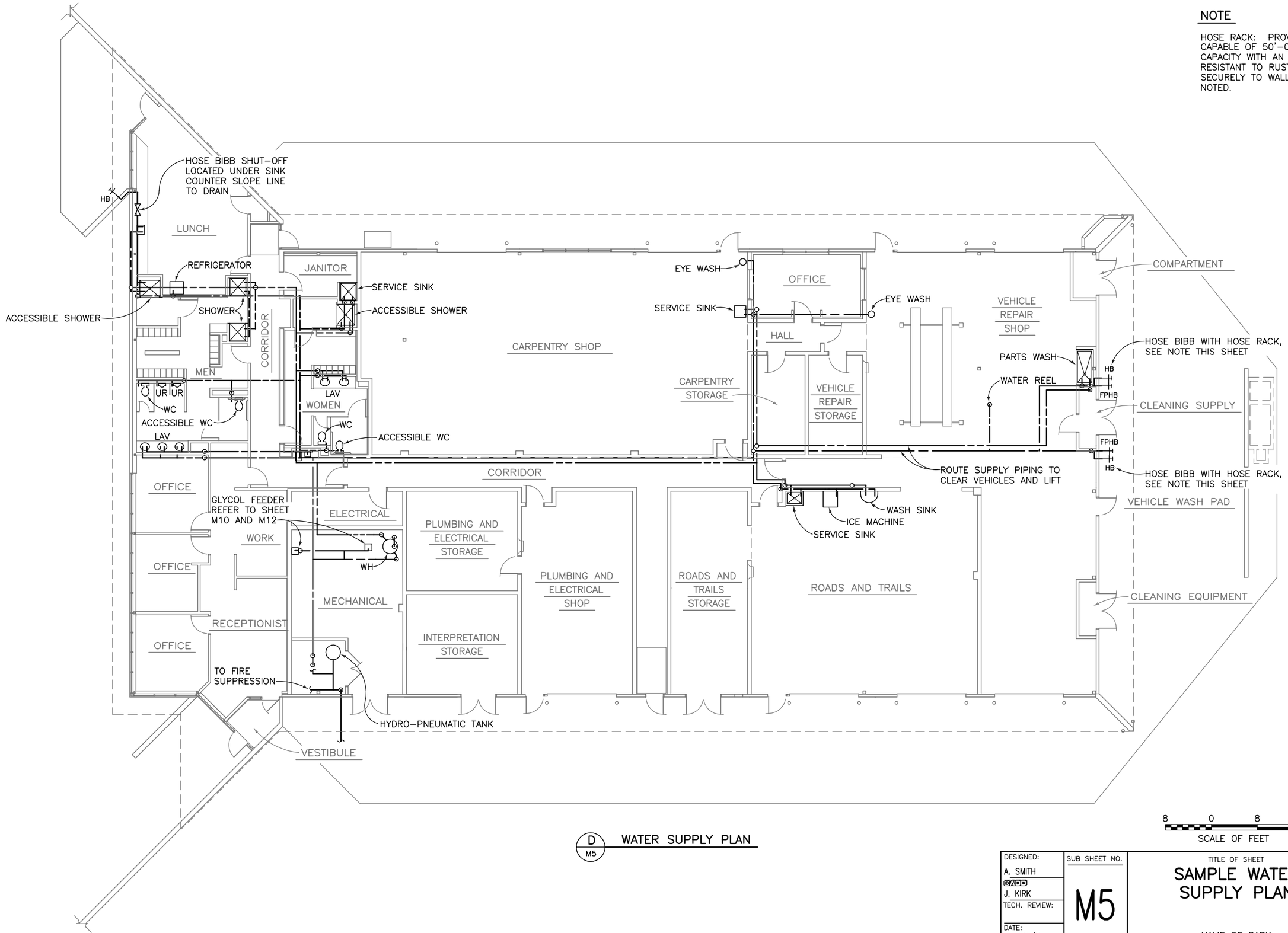

D
M5
WATER SUPPLY PLAN

DESIGNED: A. SMITH	SUB SHEET NO.	TITLE OF SHEET	DRAWING NO.
CADD J. KIRK	M5	SAMPLE WATER SUPPLY PLAN	999 41,001
TECH. REVIEW:			PKG. NO. 108 / SHEET 34
DATE: 10/94		NAME OF PARK	OF 43

8/17/01 15:18 C:EVERMAN R15 S:\SYM\USER\NPS10\FINAL-SET\MECH\M5.DWG

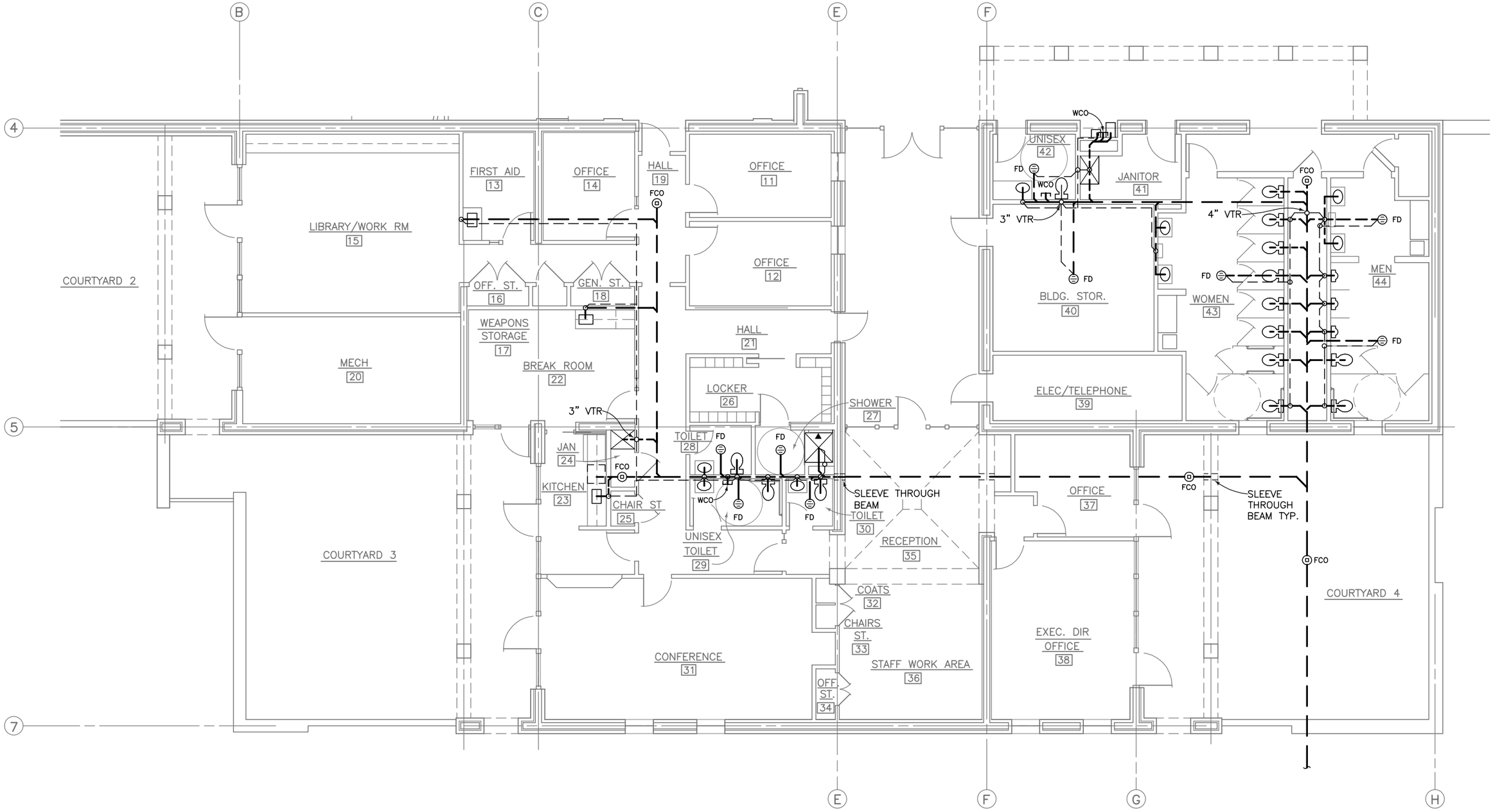

E
M6
WASTE AND VENT PLAN

4 0 4 8 12
SCALE OF FEET

DESIGNED:	SUB SHEET NO.	TITLE OF SHEET	DRAWING NO.
A. SMITH CADD J, KIRK TECH. REVIEW: DATE: 10/94	M6	SAMPLE WASTE AND VENT PLAN NAME OF PARK	999 41,001 PKG. NO. 108 SHEET 35 OF 43

8/24/01 13:20 C.EVERMAN R15 S:\SYM\USER\WPS10\FINAL-SET\MECH\W6.DWG

NOTE

VENT PIPING THROUGH ROOF SHALL EXTEND A MIN. OF 6" ABOVE ROOF SURFACE.

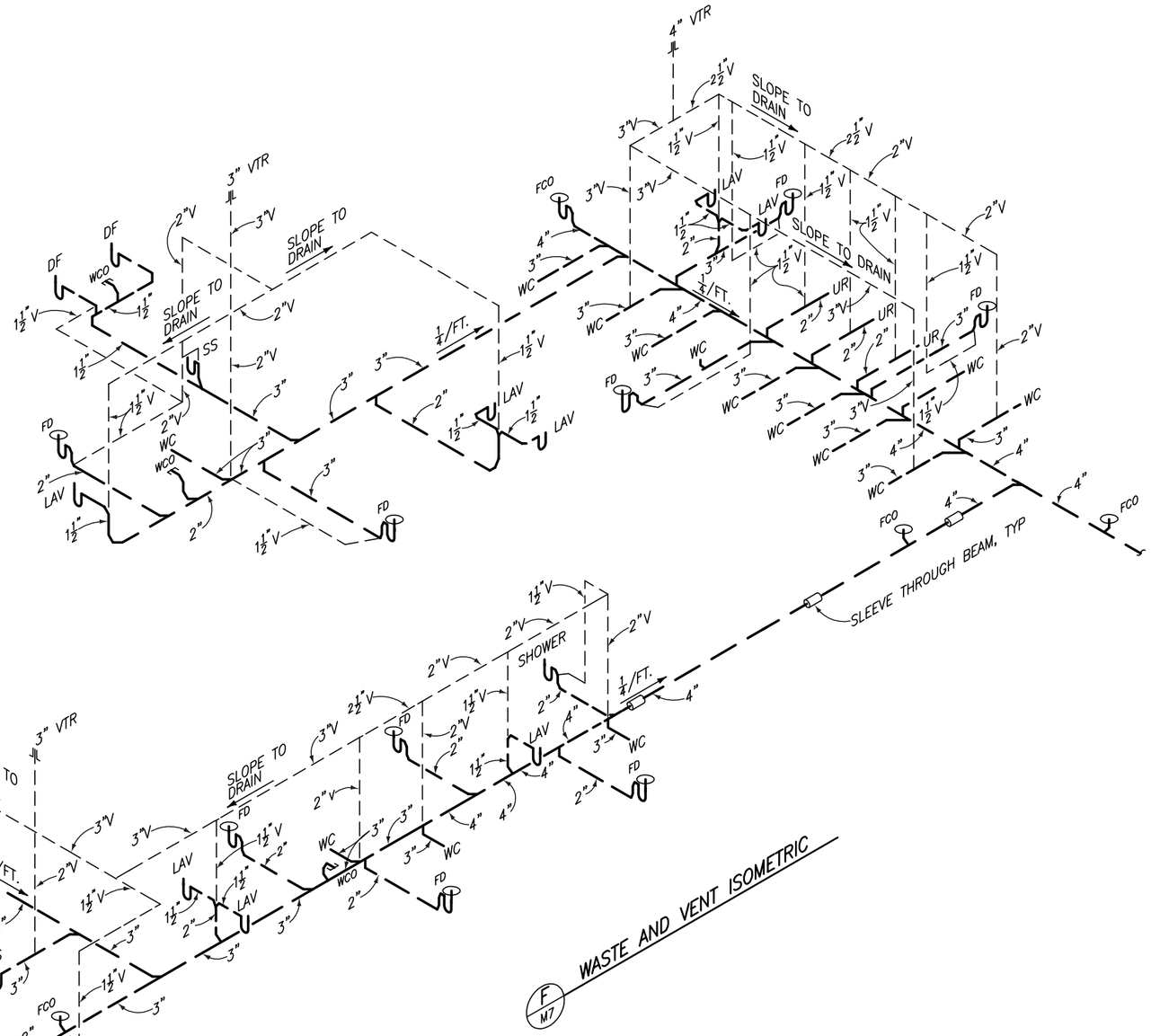

F
M7
WASTE AND VENT ISOMETRIC

NO SCALE

DESIGNED:	SUB SHEET NO.	TITLE OF SHEET	DRAWING NO.
A.SMITH GADD J. KIRK TECH. REVIEW: DATE: 10/94	M7	SAMPLE WASTE AND VENT ISOMETRIC NAME OF PARK	999 41,001 PKG. NO. 108 SHEET 36 OF 43

8/24/01 13:22 C.EVERMAN R15 S:\SYM\USER\WPS10\FINAL-SET\MECH\W7.DWG

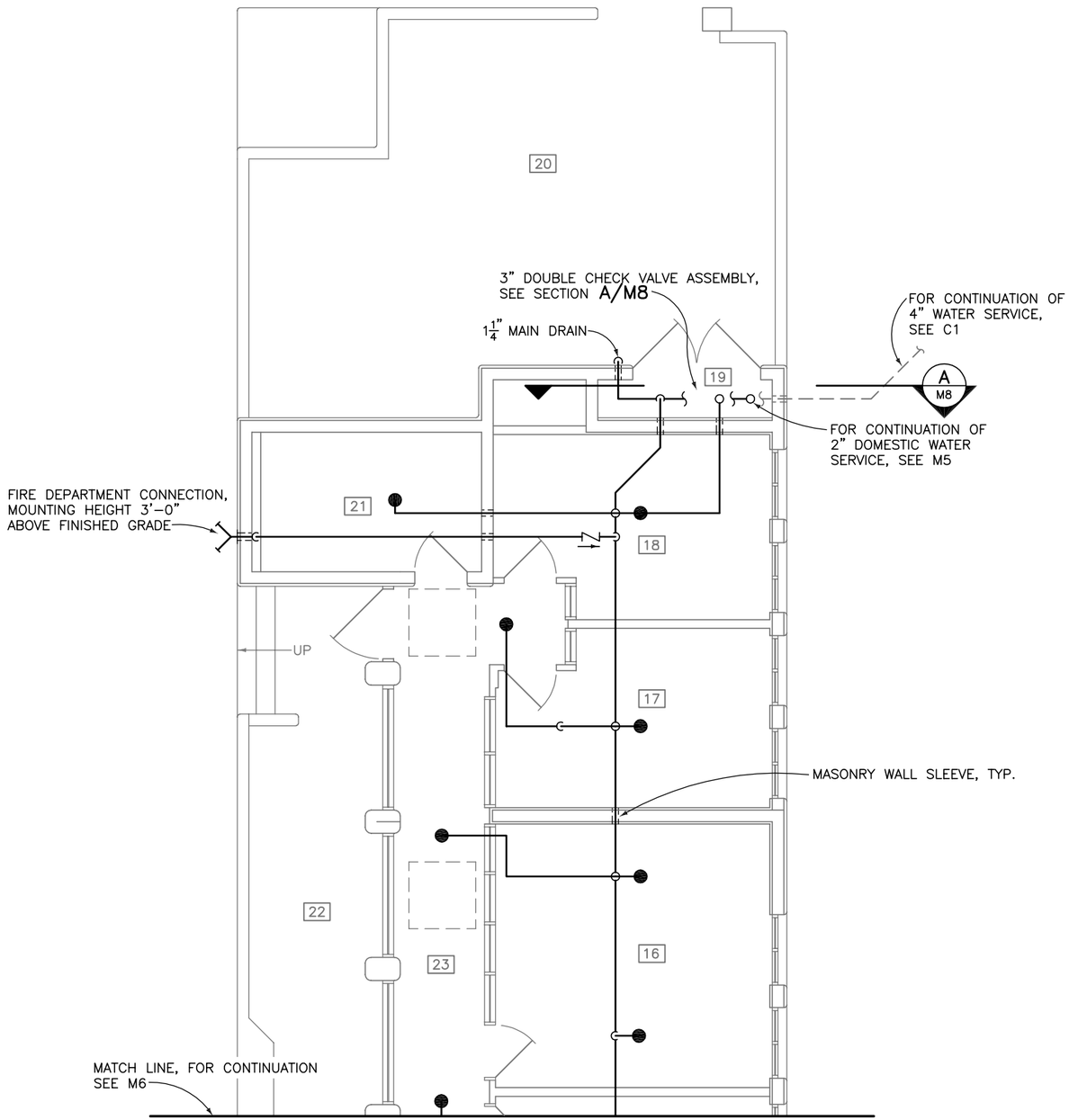

G/M8 NORTH WING FIRE PROTECTION PLAN
SCALE (A)

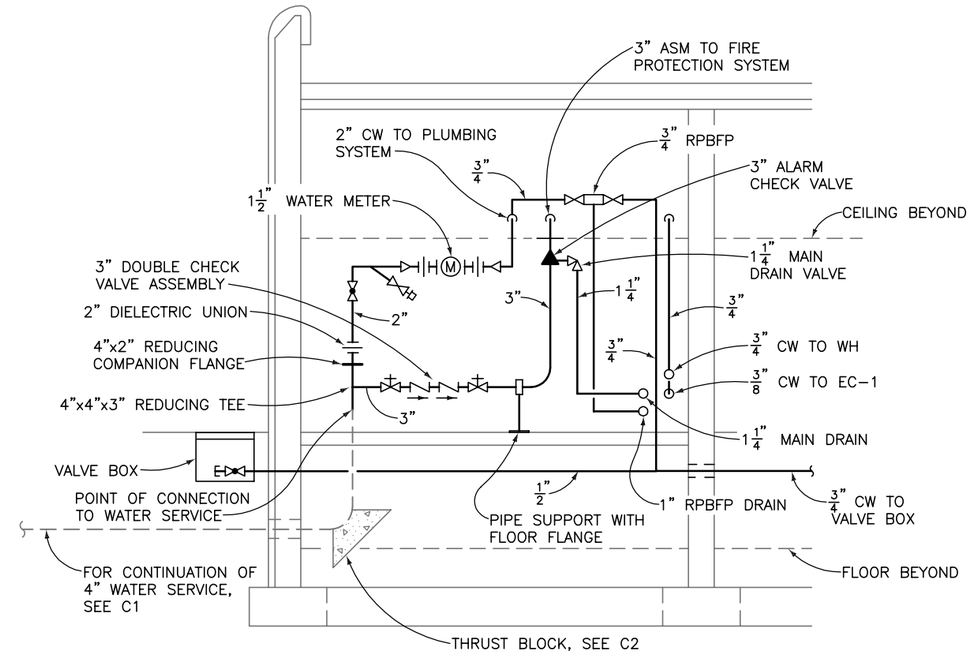

A/M8 SECTION
SCALE (B)

NOTE

FOR EXACT LOCATION OF SPRINKLERS IN FINISHED CEILING AREA, SEE A23.

SCALE (B) 2 0 2 4 SCALE OF FEET

SCALE (A) 4 0 4 8 SCALE OF FEET

DESIGNED: A. SMITH	SUB SHEET NO.	TITLE OF SHEET	DRAWING NO. 999 41,001
CADD J. KIRK	M8	SAMPLE FIRE PROTECTION PLAN	PKG. NO. 108
TECH. REVIEW:			SHEET 37 OF 43
DATE: 10/94		NAME OF PARK	

8/17/01 15:27 C.EVERMAN R15 S:\SYM\USER\WPS10\FINAL-SET\MECH\M8.DWG

ELECTRICAL ABBREVIATIONS

A	AERIAL
A1ΦP	AERIAL SINGLE–PHASE PRIMARY
A3ΦP	AERIAL THREE–PHASE PRIMARY
A1ΦS	AERIAL SINGLE–PHASE SECONDARY
A3ΦS	AERIAL THREE–PHASE SECONDARY
A, AMP	AMPERES
AC	ALTERNATING CURRENT, ABOVE COUNTER
ADD	ADDITIVE
AD–#	AUTOMATIC DAMPER, # INDICATES UNIT NUMBER
AFC	ABOVE FINISHED CONCRETE
AFF	ABOVE FINISHED FLOOR
AFG	ABOVE FINISHED GRADE
AHU–#	AIR HANDLING UNIT, # INDICATES UNIT NUMBER
A.I.R.	AMPERE INTERRUPTING RATING
AL	ALUMINUM
APPROX.	APPROXIMATELY
ATS	AUTOMATIC TRANSFER SWITCH
AV	AUDIOVISUAL
AWG	AMERICAN WIRE GAUGE
A–1,3,5	HOMERUN TO PANELBOARD A TO CIRCUIT BREAKER NUMBERS 1, 3, AND 5
BBH–#	BASEBOARD HEATER, # INDICATES UNIT NUMBER
BD	BEDDING
BF	BACKFILL
BLDG	BUILDING
C	CONDUIT, CONTACTOR
C&A	CONTROL AND ALARM
CAT.	CATALOG
CATV	CABLE TELEVISION
C.B.	CIRCUIT BREAKER
CKT	CIRCUIT
℄	CENTER LINE
CL	CHLORINE
CLR	CLEARANCE
CO	CONTRACTING OFFICER; CONDUIT ONLY
CONC.	CONCRETE
COND	CONDENSER
CR–#	CONTROL RELAY, # INDICATES UNIT NUMBER
CS	COMFORT STATION
CT	CURRENT TRANSFORMER
CU	COPPER
D	DIMMER; DEPTH
DD–#	DUCT DETECTOR, # INDICATES UNIT NUMBER
DF	DRINKING FOUNTAIN
DIA.	DIAMETER
DN	DOWN
DP	DISTRIBUTION PANELBOARD
DPDT	DOUBLE POLE, DOUBLE THROW SWITCH
DPST	DOUBLE POLE, SINGLE THROW SWITCH
DS	MAGNETIC DOOR SWITCH
EC–#	EVAPORATIVE COOLER, # INDICATES UNIT NUMBER
EDH–#	ELECTRIC DUCT HEATER, # INDICATES UNIT NUMBER
EF–#	ELECTRIC FURNACE; EXHAUST FAN, # INDICATES UNIT NUMBER
EH–#	ELECTRIC HEATER PANEL, # INDICATES UNIT NUMBER
EL	LIGHT FIXTURE WITH BUILT–IN EMERGENCY LIGHT
ELEV	ELEVATION
ELEC	ELECTRICAL
EMT	ELECTRICAL METALLIC TUBING
EOL	END OF LINE DEVICE
EP	EXPLOSION PROOF
ETM	ELAPSED TIME METER
EUH–#	ELECTRIC UNIT HEATER, # INDICATES UNIT NUMBER
EVAP	EVAPORATOR
EWC	ELECTRIC WATER COOLER
EXIST.	EXISTING
EXT	EXTERIOR
FAP	FIRE ALARM PANEL
FC–#	FAN COIL, # INDICATES UNIT NUMBER
FIAP	FIRE/INTRUSION ALARM PANEL
FLA	FULL LOAD AMPERES
FLR	FLOOR
FT.	FOOT
FVNR	FULL VOLTAGE NON–REVERSING
G, GEN.	GENERATOR
G, GND	GROUND
GF	GAS FURNACE
GFCI	GROUND–FAULT CIRCUIT INTERRUPTER
GFE	GOVERNMENT FURNISHED EQUIPMENT
H	HEIGHT
HD	ELECTRIC HAND DRYER
HID	HIGH INTENSITY DISCHARGE
HL	HIGH LEVEL
HLA	HIGH LEVEL ALARM
HLCO	HIGH LEVEL CUTOFF
HP	HORSEPOWER; HEAT PUMP
HPS	HIGH PRESSURE SODIUM
HV	HIGH VOLTAGE
HVAC	HEATING, VENTILATING, AND AIR CONDITIONING
IAP	INTRUSION ALARM PANEL
IDENT.	IDENTIFICATION
I.G.	ISOLATED GROUND
IMP.	IMPEDANCE
INT.	INTERIOR
IR–#	INDUCTION RELAY, # INDICATES UNIT NUMBER
J	JUNCTION
J–BOX	JUNCTION BOX
KHEF	KITCHEN HOOD EXHAUST FAN
KV	KILOVOLT
KVA	KILOVOLT AMPERES
KVAR	KILOVOLT AMPERES REACTIVE
KW	KILOWATT
KWH	KILOWATT HOUR
L	LIGHT; LENGTH
LA	LIGHTNING ARRESTOR
LL	LOW LEVEL
LLA	LOW LEVEL ALARM
LLCO	LOW LEVEL CUTOFF
LOP	LOSS OF PHASE
LR–#	LATCHING RELAY, # INDICATES UNIT NUMBER
LRA	LOCKED ROTOR AMPERES
LTG	LIGHTING
LTFMC	LIQUID–TIGHT FLEXIBLE METALLIC CONDUIT
LTS	LIGHTS
M	METER; MOTOR
MAX.	MAXIMUM
MC–#	MAGNETIC CONTACTOR, # INDICATES UNIT NUMBER
MCC	MOTOR CONTROL CENTER
MD	MOTORIZED DAMPER
MDP	MAIN DISTRIBUTION PANEL
MDS	MAIN DISTRIBUTION SWITCHBOARD
MECH.	MECHANICAL
MFGR.	MANUFACTURER
M.H.	MOUNTING HEIGHT; METAL HALIDE
MIN.	MINIMUM
MLM–#	MOTOR LOAD MONITOR, # INDICATES UNIT NUMBER
MS–#	MOTOR STARTER, # INDICATES UNIT NUMBER
MT	MANUAL TIMER
MTS	MANUAL TRANSFER SWITCH
MV	MERCURY VAPOR
MW	MICROWAVE
N, NEUT.	NEUTRAL
N.C.	NORMALLY CLOSED
NEC	NATIONAL ELECTRICAL CODE
NEMA	NATIONAL ELECTRICAL MANUFACTURERS ASSOCIATION
N.I.C.	NOT IN CONTRACT
NO.	NUMBER
N.O.	NORMALLY OPEN
NPS	NATIONAL PARK SERVICE
O.C.	ON CENTER, OVERCURRENT
OH	OVERHEAD
OL	OVERLOAD CONTACTS; OVERLOAD RELAY
OV	OVERVOLTAGE
P–#	PUMP, # INDICATES UNIT NUMBER
PB	PULLBOX
PC	PHOTOCELL; PULL CHAIN
PED	PEDESTAL
PIR	PASSIVE INFRARED
PLUMB.	PLUMBING
P/N	PART NUMBER
PNLB	PANELBOARD
PP	POWER POLE
PRI	PRIMARY
PROJ.	PROJECTOR; PROJECT; PROJECTION
PS–#	PRESSURE SWITCH, # INDICATES UNIT NUMBER
PSI	POUNDS PER SQUARE INCH
PT	POTENTIAL TRANFORMER
PUC	PUBLIC UTILITY COMMISSION
PUD	PUBLIC UTILITY DISTRICT
PVC	POLYVINYL CHLORIDE
R,R–#, RLY.	RELAY, # INDICATES UNIT NUMBER
REC., RECPT.	RECEPTACLE
RGS, RGSC	RIGID GALVANIZED STEEL CONDUIT
RH	RADIANT HEAT PANEL
RM	ROOM
RMS	ROOT MEAN SQUARE
RTM	RUNNING TIME METER
RV	RECREATIONAL VEHICLE
S, SEC	SECONDARY; SECONDARY POWER
S–#	SWITCH, # INDICATES SWITCH NUMBER
SB	SELECT BACKFILL; SPLICEBOX
SCH	SCHEDULE
SPDT	SINGLE POLE, DOUBLE THROW SWITCH
SPST	SINGLE POLE, SINGLE THROW SWITCH
SQ	SQUARE
SS	STAINLESS STEEL; SELECTOR SWITCH
SSR–#	SOLID STATE RELAY, # INDICATES UNIT NUMBER
ST	SHUNT TRIP
SVC	SERVICE
SYM.	SYMMETRICAL
SYM. A.I.R.	SYMMETRICAL AMPERE INTERRUPTING RATING
T	TRANSFORMER; THERMOSTAT
TC	TELEPHONE CABINET
TD	TIME DELAY
TDC	TIME DELAY CLOSE, TIME DELAY CONTACTS
TDO	TIME DELAY OPEN
TOL	THERMAL OVERLOAD
TP	TRANSFORMER POLE
TS	TIME SWITCH
TTB	TELEPHONE TERMINAL BOARD
TYP	TYPICAL
U, UG	UNDERGROUND
UH–#	UNIT HEATER, # INDICATES UNIT NUMBER
UT	UNDERGROUND TELEPHONE
UV–#	ULTRAVIOLET; UNDERVOLTAGE DETECTION RELAY, # INDICATES UNIT NUMBER
U1ΦP	UNDERGROUND SINGLE–PHASE PRIMARY
U3ΦP	UNDERGROUND THREE–PHASE PRIMARY
U1ΦS	UNDERGROUND SINGLE–PHASE SECONDARY
U3ΦS	UNDERGROUND THREE–PHASE SECONDARY
V	VOLTS
VA	VOLT AMPERES
VAC	VOLTS, ALTERNATING CURRENT
W	WATTS; WATER; WIDTH; WIRE
WH	ELECTRIC WATER HEATER
WP	WEATHERPROOF
Φ	PHASE
1Φ	SINGLE PHASE
3Φ	THREE PHASE
#	NUMBER

DESIGNER NOTE

LEGEND SHEET SHOULD INCLUDE ONLY SYMBOLS USED ON EACH SPECIFIC PROJECT.

DESIGNED: L. GORMAN GADD B. WEYER TECH. REVIEW: DATE: 10/94	SUB SHEET NO. E1	TITLE OF SHEET SAMPLE ELECTRICAL ABBREVIATIONS NAME OF PARK	DRAWING NO. 999 41,001 PKG. NO. 108 SHEET 38 OF 43

8/17/01 15:33 C.EVERMAN R15 S:\SYM\USER\NPS10\FINAL-SET\ELEC\E1.DWG

ELECTRICAL SYMBOL LEGEND

- COMPUTER OUTLET
- CONDUIT, TURNING UP
- CONDUIT, TURNING DOWN
- CAPPED CONDUIT OR SLEEVE; SUBSCRIPT S FOR ACCOMPANYING SURFACE MARKER
- SINGLE RECEPTACLE
- D — DATA OUTLET
- DUPLEX RECEPTACLE
- DUPLEX RECEPTACLE, FLOOR MOUNT
- WP — DUPLEX RECEPTACLE, WEATHERPROOF
- DUPLEX RECEPTACLE – SPLIT WIRED
- DUPLEX RECEPTACLE ISOLATED GROUND
- GFCI — DUPLEX RECEPTACLE, GROUND FAULT CIRCUIT INTERUPTER
- TRIPLEX RECEPTACLE
- DOUBLE DUPLEX RECEPTACLE
- FLOOR RECEPTACLE–RECEPTACLE SHALL BE INSTALLED TWO INCHES FROM WALL
- DOUBLE DUPLEX RECEPTACLE, FLUSH MOUNT IN FLOOR
- IG — DOUBLE DUPLEX RECEPTACLE ISOLATED GROUND
- "X" — MULTI–OUTLET ASSEMBLY. ARROWS INDICATE LIMIT OF INSTALLATION, INDICATES DUPLEX RECEPTACLES AND "X" INDICATES SPACING OF OUTLETS IN INCHES.
- TELEPHONE OUTLET – RECESSED IN WALL
- S — TELEPHONE OUTLET – SURFACE MOUNT ON WALL
- P — PAY TELEPHONE OUTLET (AND BOOTH WHERE APPLICABLE)
- TELEPHONE OUTLET – FLOOR MOUNTED
- COMPUTER MODEM OUTLET
- CABLE TV OUTLET
- UT — UNDERGROUND TELEPHONE
- UE — UNDERGROUND ELECTRICAL
- A1Φ — EXISTING OVERHEAD SINGLE PHASE PRIMARY
- T — EXISTING TELEPHONE
- A1ΦP — AERIAL SINGLE PHASE PRIMARY
- A3ΦP — AERIAL THREE PHASE PRIMARY
- A1ΦS — AERIAL SINGLE PHASE SECONDARY
- A3ΦS — AERIAL THREE PHASE SECONDARY
- ALARM — ALARM
- CATV — CABLE TELEVISION
- U1ΦP — UNDERGROUND SINGLE PHASE PRIMARY
- U3ΦP — UNDERGROUND THREE PHASE PRIMARY
- U1ΦS — UNDERGROUND SINGLE PHASE SECONDARY
- U3ΦS — UNDERGROUND THREE PHASE SECONDARY
- T — TELEPHONE LINE
- WIRING EXPOSED
- WIRING CONCEALED
- $\frac{3}{4}$" C — $\frac{3}{4}$" CONDUIT CONCEALED IN CEILING OR WALL CONTAINING 3 WIRES (PHASE, NEUTRAL, GROUND)
- A–1,3 — BRANCH CIRCUIT HOME RUN TO PANELBOARD. ARROWS INDICATE NUMBER OF CIRCUITS. LETTER IDENTIFIES PANELBOARD, NUMERAL AT ARROW IDENTIFIES CIRCUIT NUMBER
- GUY WIRE
- M — METER
- PB # — PULLBOX, # INDICATES PULLBOX NUMBER
- MH # — MANHOLE, # INDICATES MANHOLE NUMBER
- SB # — SPLICE BOX, # INDICATES SPLICE BOX NUMBER
- T — PAD MOUNTED TRANSFORMER
- POLE MOUNTED TRANSFORMER
- FIAP — COMBINATION FIRE AND INTRUSION ALARM PANEL
- IAP — INTRUSION ALARM CONTROL PANEL
- FAP — FIRE ALARM CONTROL PANEL
- I # — INTRUSION DETECTOR, # INDICATES UNIT TYPE AS LISTED BELOW
  - H = HOLD–UP DEVICE
  - U = ULTRASONIC
  - PIR = PASSIVE INFRARED
  - D = DUAL (PIR & MICROWAVE) DETECTOR
- F # — FIRE DETECTOR, # INDICATES UNIT TYPE AS LISTED BELOW
  - FT = FIXED TEMPERATURE
  - RA = RATE ANTICIPATION
  - RR = RATE OF RISE
  - I = IONIZATION
  - PE = PHOTELECTRIC
  - D = DUCT
- FS — FLOW SWITCH
- TS — TAMPER SWITCH
- MS — MANUAL PULL STATION
- F # — HORN, F INDICATES FIRE AND I INDICATES INTRUSION, S AT # LOCATION INDICATES HORN/STROBE COMBINATION
- I — BELL, F INDICATES FIRE AND I INDICATES INTRUSION
- M — MAGNETIC SWITCH
- K — KEYPAD
- AP — ANNUNCIATION PANEL
- ATD — AUTOMATIC TELEPHONE DIALER
- D — DOOR HOLDER, MAGNETIC
- EOL — END–OF–LINE DEVICE
- CCTV — CLOSED CIRCUIT TELEVISION SECURITY CAMERA
- M — METER SOCKET
- PUSHBUTTON
- BUZZER, DOORBELL
- HD — HAND DRYER
- EH — ELECTRIC HEATER
- DF — DRINKING FOUNTAIN
- CO — CARBON MONOXIDE SENSOR
- RS — RADON GAS SENSOR
- UPS — UNINTERRUPTIBLE POWER SUPPLY
- PLC — PROGRAMMABLE LIGHTING CONTROLLER
- PA — PUBLIC ADDRESS SYSTEM
- DCP — DUPLEX PUMP CONTROLLER
- MOTOR
- CR# — CONTROL RELAY COIL, # INDICATES COIL DESIGNATION
- DH — DUCT HEATER
- OS — OCCUPANCY SENSOR
- PC — PHOTO CELL RELAY
- TS — TIME SWITCH
- AR — AUXILIARY RELAY
- PR — PROTECTIVE RELAY
- UV PM — UNDERVOLTAGE RELAY, PM INDICATES LOSS OF PHASE OR PHASE REVERSAL
- P — PRIMARY COIL
- S — SECONDARY COIL
- T — THERMOSTAT
- H — HUMIDISTAT
- G — GENERATOR
- SPECIAL PURPOSE RECEPTACLE
- S — SINGLE POLE SWITCH
- S # — SWITCH, # INDICATES UNIT TYPE AS LISTED BELOW
  - 3 = THREE WAY SWITCH
  - 4 = FOUR WAY SWITCH
  - K = KEY OPERATED SWITCH
  - MS = MANUAL MOTOR STARTER
  - P = PILOT LIGHT
  - D = DIMMER SWITCH
  - a,b, etc. = DIFFERENTIATES SEPARATE SWITCH OPERATED CIRCUITS IN THE SAME AREA
  - EF = EXHAUST FAN SWITCH
  - R = ON/OFF VARIABLE SPEED SWITCH
  - S = SPEED CONTROL SWITCH
  - T = TIMER SWITCH
- S — SWITCH AND RECEPTACLE COMBINATION
- D — FLOOR MODULE
  - TELEPHONE
  - COMPUTER
  - ISOLATED GROUND TYPE DUPLEX RECEPTACLE
  - D — DATA (FAX)
- CONDUCTORS, CROSSING AND ELECTRICALLY CONNECTED
- CONDUCTORS, CROSSING BUT NOT CONNECTED
- SEPARABLE CONNECTOR (ENGAGED)
- TERMINAL BLOCK
- REPRESENTS CONNECTION FROM EXTERNAL EQUIPMENT DOES NOT NECESSARILY REPRESENT A TERMINAL POINT
- ELECTRICAL CONTACTS, N.O.
- ELECTRICAL CONTACTS, N.C.
- CURRENT TRANSFORMER
- POTENTIAL TRANSFORMER
- TRANSFORMER
- 3Φ DELTA
- 3Φ GROUNDED WYE
- ELECTRICAL DEVICE, FUNCTION AS NOTED
- J — JUNCTION BOX
- ADJUSTABLE TIME DELAY RELAY
- ENCLOSURE, SURFACE MOUNT, FUNCTION AS NOTED
- ENCLOSURE, FLUSH MOUNT, FUNCTION AS NOTED
- PANELBOARD, SURFACE MOUNT
- ENCLOSURE, FLUSH MOUNT,
- DISCONNECT SWITCH
- MOTOR STARTER
- COMBINATION STARTER AND DISCONNECTING MEANS
- MCC — MOTOR CONTROL CENTER
- TELEPHONE TERMINAL BOARD
- S — SPEAKER
- PA A,M — PUBLIC ADDRESS SYSTEM, A INDICATES AMPLIFIER, M INDICATES MICROPHONE
- TCP — TEMPERATURE CONTROL PANEL
- SOLENOID OPERATED VALVE
- RHP # — RADIANT HEATER PANEL, # INDICATES UNIT NUMBER
- AHU — AIR HANDLING UNIT
- SWITCH, SPST
- SWITCH, SPDT
- SWITCH, DPST
- SWITCH, DPDT
- IR# — INDUCTION RELAY CONTACTS, # INDICATES UNIT NUMBER
- NORMALLY OPEN, MOMENTARY CLOSE PUSHBUTTON SWITCH
- NORMALLY CLOSED, MOMENTARY OPEN CONTACT PUSHBUTTON SWITCH
- GENERAL SELECTOR OR MULTIPOSITON SWITCH. ANY NUMBER OF TRANSMISSION PATHS MAY BE SHOWN
- LIMIT SWITCH (N.O.) DIRECTLY ACTUATED AND SPRING RETURNED
- LIMIT SWITCH (N.C.) DIRECTLY ACTUATED AND SPRING RETURNED
- TIME DELAY CONTACT, N.O. OPENS ON DE–ACTIVATION
- TIME DELAY CONTACT, N.C. CLOSES ON DE–ACTIVATION
- TIME DELAY CONTACT, N.O., TIME DELAY CLOSING ON ACTIVATION
- TIME DELAY CONTACT, N.C., TIME OPENING ON ACTIVATION
- TEMPERATURE ACTUATED SWITCH (THERMOSTAT). OPENS ON RISING TEMPERATURE
- TEMPERATURE ACTUATED SWITCH (THERMOSTAT), OPENS ON FALLING TEMPERATURE
- FLOW–ACTUATED SWITCH OPENS ON INCREASE IN FLOW
- FLOW–ACTUATED SWITCH, CLOSES ON INCREASE IN FLOW
- LIQUID–LEVEL–ACTUATED SWITCH, CLOSES ON RISING LEVEL
- LIQUID–LEVEL–ACTUATED SWITCH, OPENS ON RISING LEVEL
- PRESSURE– OR VACUUM–ACTUATED SWITCH, OPENS ON RISING PRESSURE
- PRESSURE– OR VACUUM–ACTUATED SWITCH, CLOSES ON RISING PRESSURE
- # — TRANSFER SWITCH, # INDICATES UNIT TYPE AS LISTED BELOW
  - ATS IF AUTOMATIC TRANSFER SWITCH
  - MTS IF MANUAL TRANSFER SWITCH
- SWITCH, 3 POLE, SINGLE THROW
- L U — LATCHING RELAY
- # — LIGHT FIXTURE, # INDICATES TYPE
- # — CEILING OR PENDANT MOUNTED FLUORESCENT FIXTURE, # INDICATES TYPE
- # — WALL MOUNTED LIGHT FIXTURE, # INDICATES TYPE
- # — FLUORESCENT STRIP LIGHT # INDICATES TYPE
- # — TRACK LIGHT # INDICATES TYPE
- EXIT LIGHT
- # — SURFACE OR PENDANT CONTINUOUS ROW FLUORESCENT FIXTURE
- # — EMERGENCY FLUORESCENT FIXTURE, # INDICATES TYPE
- # — LIGHT FIXTURE, FLUORESCENT, WALL MOUNT, # INDICATES TYPE
- EMERGENCY LIGHTING CONVERTER AND HEAD (⊿ – EMERGENCY LIGHTING HEAD)
- P # — PILOT LIGHT, PUSH–TO–TEST TRANSFORMER TYPE. # INDICATES COLOR AS LISTED BELOW
  - A = AMBER
  - B = BLUE
  - C = CLEAR
  - G = GREEN
  - R = RED
  - W = WHITE
  - Y = YELLOW
- # — METER INSTRUMENT # INDICATES METER TYPE AS LISTED BELOW
  - A = AMPERES
  - D = DEMAND
  - ETM = ELAPSED TIME
  - RTM = RUN TIME
  - F = FREQUENCY
  - KWH = KILWATT HOUR
  - PF = POWER FACTOR
  - T° = TEMPERATURE
  - V = VOLT
  - VA = VOLT–AMPERES
  - VAR = VOLT AMPERES REACTIVE
- # — ONE POLE CIRCUIT BREAKER, # INDICATES AMP RATING
- # — TWO POLE CIRCUIT BREAKER, # INDICATES AMP RATING
- # — THREE POLE CIRCUIT BREAKER, # INDICATES AMP RATING
- # — FUSED SWITCH (OPEN), # INDICATES AMP RATING
- # — FUSE (GENERAL) # INDICATES AMP RATING
- # — FUSE, SIZE AS SHOWN, # INDICATES AMP RATING
- # — BAYONET FUSE, # INDICATES AMP RATING
- # ST — SHUNT TRIP CIRCUIT BREAKER, # INDICATES AMP RATING
- THERMAL ELEMENT, MOTOR OVERLOAD
- GROUND
- LIGHTNING ARRESTOR; SURGE ARRESTOR
- BATTERY
- LIQUID TIGHT FLEXIBLE METALLIC CONDUIT. SIZE AS NOTED.
- CORD AND PLUG
- PROBE
- EP — CONDUIT SEAL, EP INDICATES EXPLOSION PROOF
- KEY SYMBOL

DESIGNER NOTE

LEGEND SHEET SHOULD INCLUDE ONLY SYMBOLS USED ON EACH SPECIFIC PROJECT.

DESIGNED: L. GORMAN	SUB SHEET NO.	TITLE OF SHEET	DRAWING NO. 999 41,001
CADD B. WEYER	E2	SAMPLE ELECTRICAL SYMBOL LEGEND	PKG. NO. 108
TECH. REVIEW:		NAME OF PARK	SHEET 39 OF 43
DATE: 10/94			

8/17/01 15:39 C.EVERMAN R15 S:\SYM\USER\NPS10\FINAL-SET\ELEC\E2.DWG

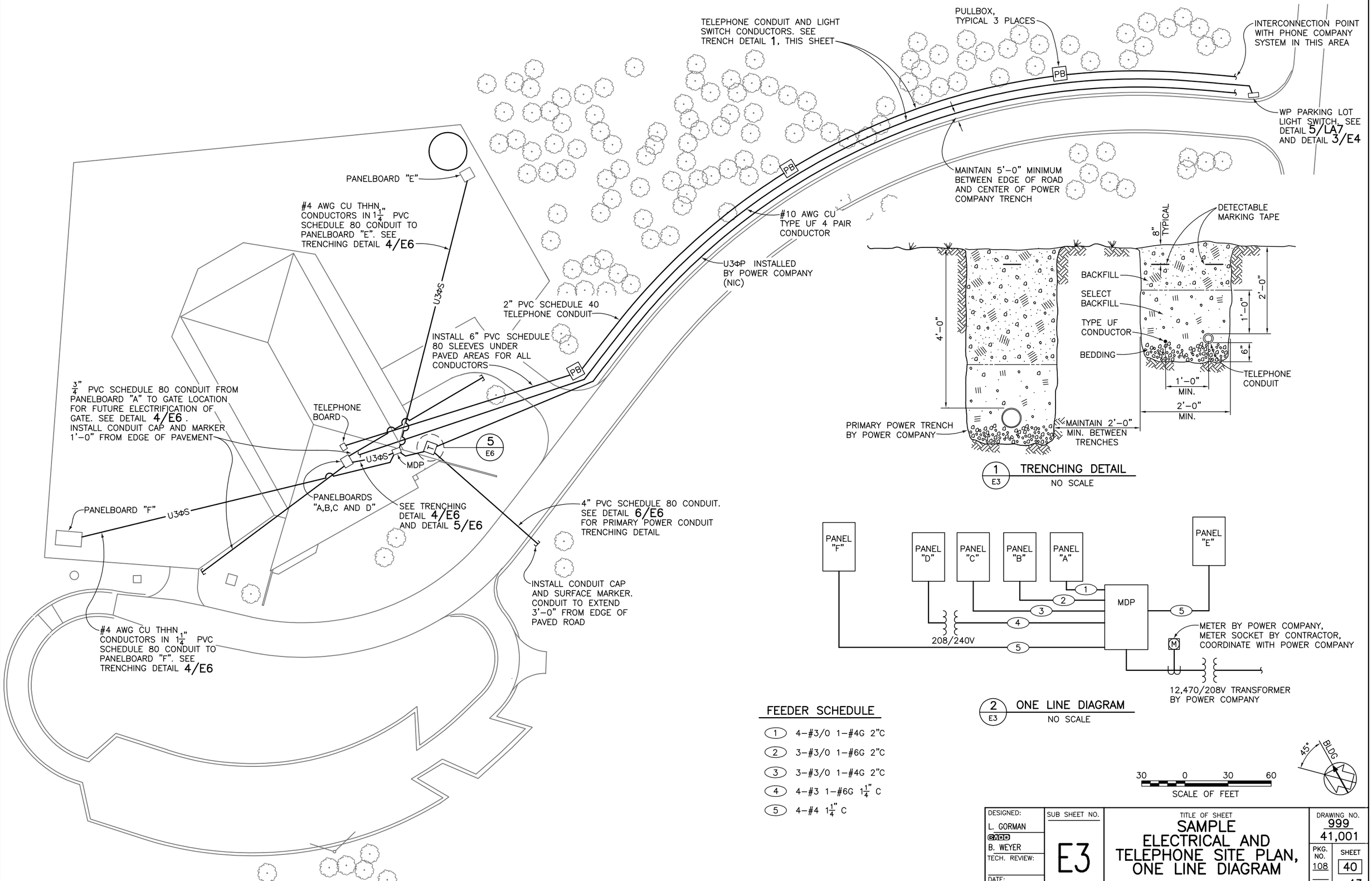

FEEDER SCHEDULE

1. 4-#3/0 1-#4G 2"C
2. 3-#3/0 1-#6G 2"C
3. 3-#3/0 1-#4G 2"C
4. 4-#3 1-#6G 1 1/4" C
5. 4-#4 1 1/4" C

DESIGNED: L. GORMAN	SUB SHEET NO.	TITLE OF SHEET	DRAWING NO. 999 41,001
CADD B. WEYER	E3	SAMPLE ELECTRICAL AND TELEPHONE SITE PLAN, ONE LINE DIAGRAM	PKG. NO. 108
TECH. REVIEW:		NAME OF PARK	SHEET 40 OF 43
DATE: 10/94			

8/24/01 13:24 C.EVERMAN R15 S:\SYM\USER\NPS10\FINAL-SET\ELEC\E3.DWG

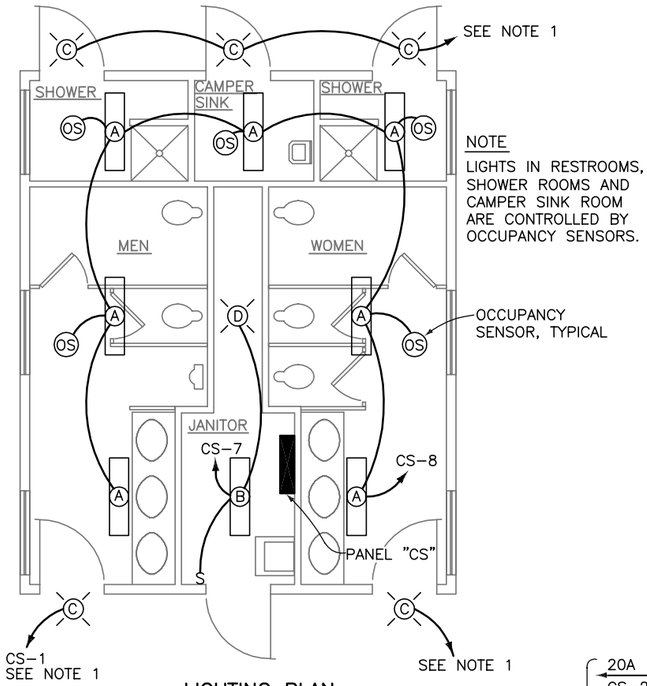

NOTE

LIGHTS IN RESTROOMS, SHOWER ROOMS AND CAMPER SINK ROOM ARE CONTROLLED BY OCCUPANCY SENSORS.

LIGHTING PLAN

PANELBOARD "CS" SCHEDULE

120/240 VOLT, 1Φ, 3 WIRE, 225 A. BUS, MAIN LUGS ONLY, SURFACE MOUNTED IN JANITOR CLOSET
SYM. A.I.R. (MAIN C.B. 10,000, BRANCH C.B. 10,000,) PROVIDE NEUTRAL BUS, PROVIDE GROUND BUS
PLUG-IN BRANCH C.B., NEMA 1 ENCLOSURE, MANUFACTURER AND CAT. NO. SQ. D MODEL NQOD CLASS 1630

LOAD VA	DESCRIPTION	L1	L2	DESCRIPTION	LOAD VA	BUS LOAD (VA) L1	BUS LOAD (VA) L2
50	OUTSIDE LIGHTS	20 1	2 20	LIFT STATION MOTORS (SEE NOTE 7)	1200	650	
720	RECEPTACLES RESTROOMS	20 3	4 20				1320
720	RECEPTACLES	20 5	6 20	LIFT STATION CONTROL	500	1220	
110	UTILITY CHASE LIGHTS	20 7	8 20	INTERIOR LIGHTS	350		460
150	SHOWER TOTAM	20 9	10 20	SHOWER TOTAM	150	300	
1725	HAND DRYER	20 11	12 100	WATER HEATER (SEE NOTE 5)	18000		10725
1725	HAND DRYER	20 13	14			10725	
1500	RADIANT HEATER PANELS (SHOWERS)	20 15	16 20	RADIANT HEATER PANELS (CAMPER SINK)	750		2250
15000	15 KW ELECTRIC FURNACE (SEE NOTE 6)	90 17	18 20	EXHAUST FANS	1200	8700	
		19	20 20	WEATHERPROOF RECPT.	720		8220
	SPARE	20 21	22 20	LIFT STATION PUMP 7	1200	600	
	SPARE	20 23	24				600
	SPACE	25	26	SPACE			
	SPACE	27	28	SPACE			
	SPACE	29	30	SPACE			
				BUS LOAD TOTALS (KVA)		22.195	23.575
				TOTAL LOAD (KVA)		45.77	
				ESTIMATED MAXIMUM DEMAND (KVA)		40.00	

LIGHT FIXTURE SCHEDULE

SYMBOL	TYPE	LAMP	VOLTAGE	MOUNTING	PART NO. AND MANUFACT.
A	VANDAL-PROOF FLUORESCENT ENERGY SAVING BALLAST	1-40 WATT 48 INCH RAPID START	120V	CEILING SURFACE	U.L. LISTED FOR WET LOCATIONS. CATALOG #7170 KENALL MFG. CO., ILL. (708) 360-8200
B	FLUORESCENT ENERGY SAVING BALLAST	2-40 WATT 48 INCH RAPID START	120V	CEILING SURFACE	MDF-240-ESB J.W. LIGHTING OF KIDDE
C	VANDAL-PROOF FLUORESCENT 0° F. BALLAST CLEAR LENS	PL-7 WATT	120V	WALL SURFACE	U.L. LISTED FOR WET LOCATIONS. CATALOG #3707 KENALL MFG. CO., ILL. (708) 360-8200
D	FLUORESCENT PORCELAIN BASE	PL-7 WATT	120V	CEILING SURFACE	LEVITON BASE AND 7 WATT PL LAMP
E	SQUARE BOLLARD WITH LOUVERS	120V. 35 WATT L.P.S.	120V	BASE PLATE	8" SQ. AL., 36" HIGH, DARK BRONZE FINISH, HOUSE SIDE SHIELD,P/N BS8-L-35L-120 -DB-HS-36, EMCO LIGHTING (800) 227-0758
F	WARNING STROBE LIGHT, RED WITH GUARD	XENON 120V., 0.3A. 106 CANDLEPOWER 104 HOURS LIFE	120V	WALL BRACKET $\frac{3}{4}$" HUB	CATALOG #SHBG-2-23R KILLARK ELECTRIC MFG. CO. ST. LOUIS, MO.
G	SEALED WEATHERPROOF, TAMPERPROOF, 0° F. BALLAST	PL-9 WATT	120V	RECESSED IN RETAINING WALL	STG-9PL-120-0-0°F. MWC LIGHTING QUALITY LIGHTING (708) 451-0040

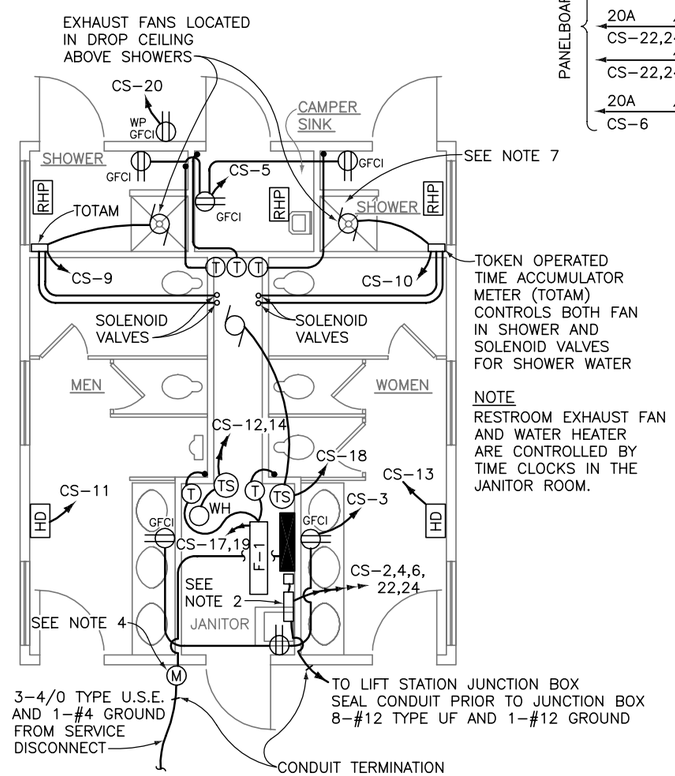

NOTE

RESTROOM EXHAUST FAN AND WATER HEATER ARE CONTROLLED BY TIME CLOCKS IN THE JANITOR ROOM.

TOKEN OPERATED TIME ACCUMULATOR METER (TOTAM) CONTROLS BOTH FAN IN SHOWER AND SOLENOID VALVES FOR SHOWER WATER

POWER PLAN

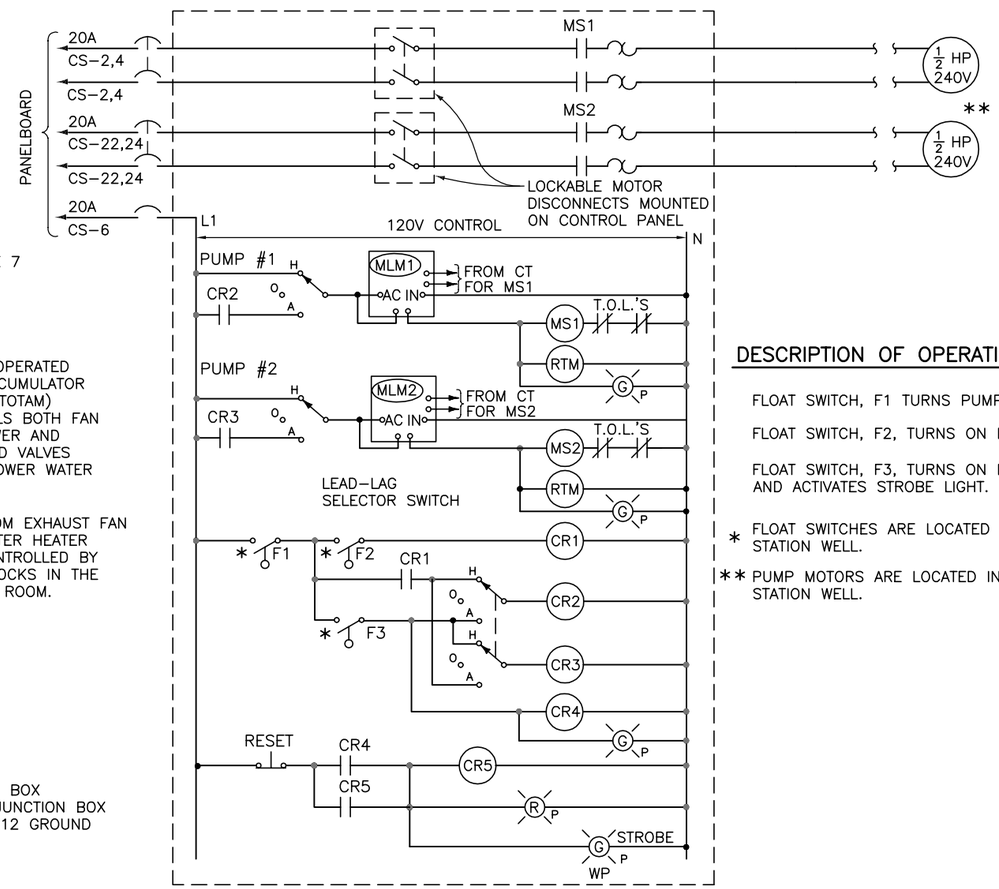

LIFT STATION POWER AND CONTROL

NO SCALE

DESCRIPTION OF OPERATION

FLOAT SWITCH, F1 TURNS PUMP OFF.

FLOAT SWITCH, F2, TURNS ON LEAD PUMP

FLOAT SWITCH, F3, TURNS ON LAG PUMP AND ACTIVATES STROBE LIGHT.

* FLOAT SWITCHES ARE LOCATED IN LIFT STATION WELL.

** PUMP MOTORS ARE LOCATED IN LIFT STATION WELL.

NOTES

1. THE LIGHT FIXTURES "C" ARE TO BE MOUNTED ON THE SOFFIT (UNDERSIDE OF EAVES) HALFWAY BETWEEN EAVE EDGE AND BUILDING WALL AND CENTERED FOR EACH DOOR AND POWERED FROM CS-1 VIA PHOTOCELL ON NORTH SIDE OF BUILDING UNDER EAVES.
2. THE LIFT STATION PUMP MOTORS WILL BE POWERED BY FOUR #12 TYPE UF, THE FLOATS WILL REQUIRE FOUR #12 TYPE UF, AND THE WEATHERPROOF RECEPTACLE NEAR THE VENT PIPE WILL REQUIRE TWO #12 TYPE UF, THIS IS A TOTAL OF TEN #12 TYPE UF AND ONE #12 GROUND FOR EACH LIFT STATION. THE DOSING SIPHON WILL REQUIRE TWO #12 TYPE UF FOR THE WEATHERPROOF RECEPTACLE AND TWO #12 TYPE UF FOR THE HIGH ALARM FLOAT FOR A TOTAL OF FOUR #12 TYPE UF AND ONE #12 GROUND AT EACH DOSING SIPHON. THE WEATHERPROOF RECEPTACLE SHALL CONSIST OF A CROUSE-HINDS DS222 MOUNTED ON A FS2 DEAD-END (20A, 125V, $\frac{3}{4}$" HUB).
3. MOUNT KILWATT HOUR METER ABOVE WATER METER FOR EASE OF READING. DELETE KILOWATT HOUR METER AT COMFORT STATIONS #5,6,7,8, AND 9.
4. HAND DRYER TO BE RATED 1725 WATTS AT 115V., REVOLVING NOZZLE, SURFACE MOUNTED, 46" ABOVE FLOOR IN MENS WASHROOM AND 44" ABOVE FLOOR IN LADIES RESTROOM. COLOR ALMOND. MODEL A2 WORLD DRYER CORPORATION, (312)449-6950.
5. WATER HEATER TO BE HARD WIRED WITH 2-#10 TYPE THWN AND 1-#8 GROUND.
6. THE ELECTRIC FURNACE, (F-1), IS CONTROLLED BY EITHER OF THE TWO THERMOSTATS. FURNACE TO BE HARD WIRED WITH #1/0 TYPE THWN AND 1-#8 GROUND.
7. IN COMFORT STATION #9, DELETE BOTH SHOWERS IN THEIR ENTIRETY. USE FOR STORAGE. DELETE OUTSIDE LIGHTS AND CHANGE INSIDE LIGHTS TO INCANDESCENT PORCELAIN BASES.
8. WATER HEATER AND EXHAUST FAN ARE OPERATED BY TIME CLOCKS.
9. STROBE ALARM LIGHT, WATER PROOF, MOUNTED OUTSIDE OF BUILDING, CENTERED ABOVE DOOR TO UTILITY CHASE.
10. LEAD-LAG SELECTOR SWITCH, PUMP #1 AND PUMP #2 H.O.A. SWITCHES, RESET SWITCH, RUN TIME INDICATORS, RUN LIGHTS, AND ALARM LIGHTS ON DOOR OF CONTROL CABINET. PILOT LIGHTS WILL BE IDENTIFIED AS "NO. 1 PUMP RUNNING", "NO. 2 PUMP RUNNING", "LAG PUMP ON", "HIGH LEVEL ALARM".

4 0 4 8
SCALE OF FEET

DESIGNED: L. GORMAN	SUB SHEET NO.	TITLE OF SHEET	DRAWING NO. 999 41,001
CADD B. WEYER	E4	SAMPLE POWER AND LIGHTING PLAN, SHEDULES AND CONTROL SCHEMATIC	PKG. NO. 108
TECH. REVIEW:		NAME OF PARK	SHEET 41 OF 43
DATE: 10/94			

8/20/01 09:23 C.EVERMAN R15 S:\SYM\USER\NPS10\FINAL-SET\ELEC\E4.DWG

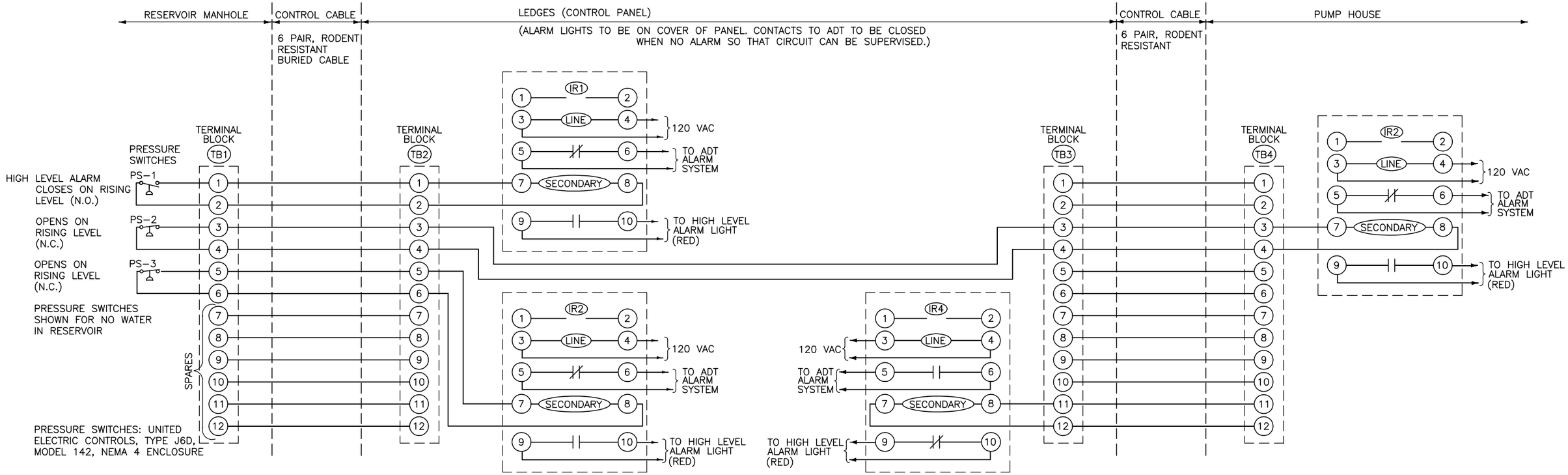

CONTROL WIRING DIAGRAM

RELAY AND CONTROL SCHEDULE

IR INDUCTION RELAY, WITH INTERCHANGEABLE 25 AMPERE DOUBLE BREAK CONTACTS,120 VAC COIL,24V SECONDARY COIL. B/W CONTROLS DIVISION, SECTION 1500.

IR1 – P/N 1500–D–L1–S2–OC–X (SHOWN WITH POWER OFF AND SECONDARY COIL OPEN CIRCUIT FROM HIGH LEVEL ALARM PRESSURE SWITCH PS–1

IR2 – P/N 1500–D–L1–S2–OC–X (SHOWN WITH POWER OFF. WHEN AC POWER IS APPLIED AND PS–3 INDICATING LOW WATER, CONTACTS WILL REVERSE SO THAT N.C. CONTACT TO ADT OPEN AND N.O. CONTACT TO LO LEVEL ALARM CLOSES.)

IR3 – P/N 1500–C–L1–S2–OC–X (SHOWN WITH POWER OFF. WHEN AC POWER IS APPLIED THEN PS–2 BEING CLOSED (LOW WATER) THEN IR3 CONTACTS WILL CLOSE TO INITIATE PUMP MOTOR START UP. WATER RAISING WILL OPEN PS–2 AND PUMP WILL BE STOPPED.)

IR4 – P/N 1500–D–L1–S2–OC–X (SHOWN WITH POWER OFF, WHEN POWER IS APPLIED AND CR1 ENERGIZED THEN IR4 CONTACT WILL BE CLOSED FOR NO ALARM, AND ALARM LIGHT WILL BE OFF.)

CR CONTROL RELAY, 10 AMPERE CONTACTS, 120V COIL. SQUARE D CLASS 8501

MLM MOTOR LOAD MONITOR, OVER AND UNDER LOAD, TIME MARK MODEL 400

MS MOTOR STARTER, COMBINATION TYPE WITH CIRCUIT BREAKER AND BIMETALLIC OVERLAY RELAY. THERMAL UNITS PER MANUFACTURER'S RECOMMENDATION.

MS1 – NEMA SIZE 1 FOR $1\frac{1}{2}$ HP MOTOR

MS2 – NEMA SIZE 2 FOR 5 HP MOTOR(N.I.C.)

RTI RUN TIME INDICATOR 0–99,999 HOURS, 120V

CT CURRENT TRANSFORMER, TIME MARK MODEL 276A
$1\frac{1}{2}$ HP P/N 276A–15
5 HP P/N 276A–40

NO SCALE

DESIGNED: L. GORMAN	SUB SHEET NO.	TITLE OF SHEET	DRAWING NO. 999 41,001
GADD B. WEYER	E5	SAMPLE CONTROL WIRING DIAGRAM	PKG. NO. 108 / SHEET 42 OF 43
TECH. REVIEW:		NAME OF PARK	
DATE: 10/94			

8/20/01 09:16 C.EVERMAN R15 S:\SYM\USER\WPS10\FINAL-SET\ELEC\E5.DWG

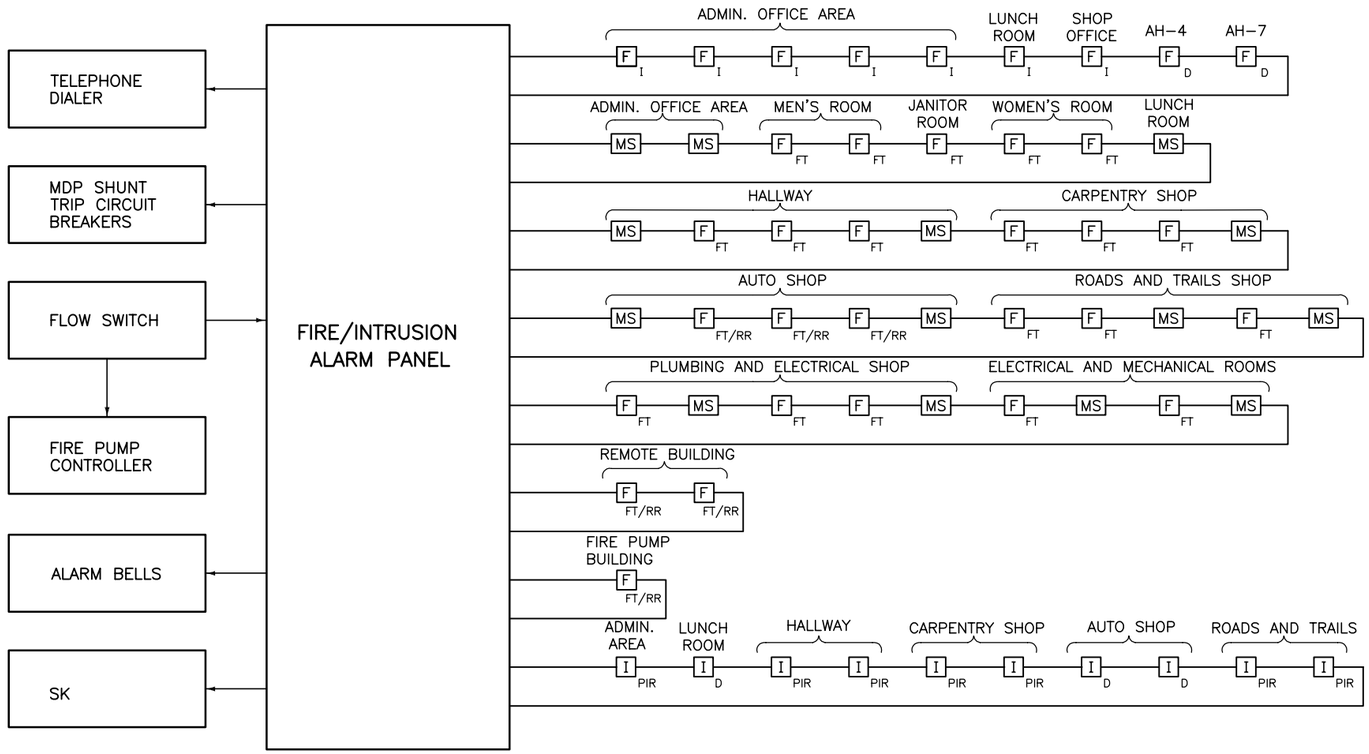

FIRE ALARM SYSTEM FUNCTIONS AS FOLLOWS:

1. IONIZATION AND DUCT DETECTORS ACTIVATE ALARM BELLS ON BUILDING AND SHUT DOWN HVAC SYSTEM.
2. FT, FT/RR AND MS DEVICES ACTIVATE ALARM BELLS, TELEPHONE DIALER, AND MDP SHUNT TRIP BREAKERS.
3. FLOW SWITCH ACTIVATES FIRE PUMP THROUGH FIRE PUMP CONTROLLER, ALARM BELLS, TELEPHONE. DIALER AND MDP SHUNT TRIP BREAKERS.

FIRE/INTRUSION ALARM SYSTEM RISER DIAGRAM

NO SCALE

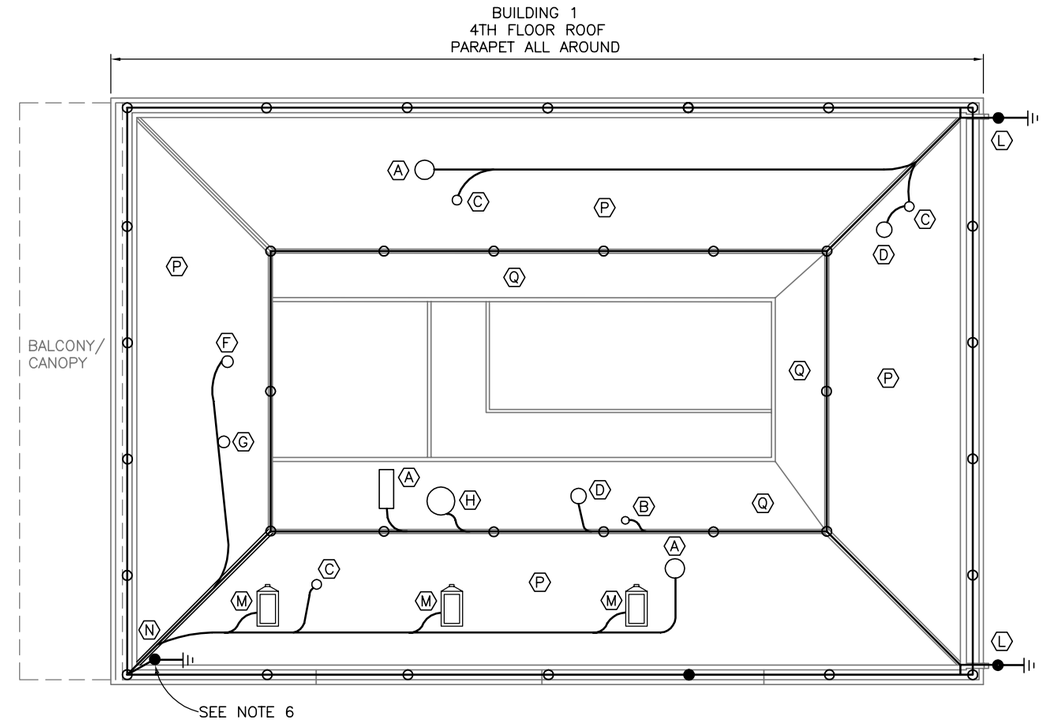

LIGHTNING PROTECTION

NOTES

1. ROOF PENETRATIONS (BONDED TO CONDUCTOR AS SHOWN)
   - (A) OUTSIDE AIR INTAKE
   - (B) 4" VENT THRU ROOF
   - (C) 2" VENT THRU ROOF
   - (D) EXHAUST FAN
   - (E) CONDENSING UNIT
   - (F) 18" DIA. GAS VENT
   - (G) 10" DIA. GAS VENT
   - (H) ELEVATOR SHAFT VENT
   - (J) DRYER VENT
   - (K) 4" ROOF DRAIN
   - (L) 6" GALVANIZED DOWNSPOUT WITH COLLECTOR HEAD
   - (M) GALVANIZED FLASHING AND CRICKET AT SKYLIGHTS
   - (N) PVC THRU-ROOF CONNECTOR
   - (P) RIGID SHINGLES 6/12 PITCH
   - (Q) MEMBRANE ROOFING (FLAT)
2. LIGHTNING PROTECTIONS SYMBOLS
   - o AIR TERMINALS
   - ●
   - —— CONDUCTOR
   - ⊣|ı DRIVEN GROUND ROD
3. MOUNT AIR TERMINALS ON ADHESIVE AIR TERMINAL BASE.
4. FASTEN EXPOSED CABLES WITH ADHESIVE CABLE HOLDERS NOT MORE THAN 3 FEET APART.
5. DOWN CONDUCTORS TO BE IN PVC CONDUIT, PAINT TO MATCH SURROUNDINGS ALONGSIDE DOWN SPOUT WHERE AVAILABLE. USE COLLECTOR HEAD TO PENETRATE PARAPET.
6. DOWN CONDUCTOR AT SOUTHEAST CORNER (ON DECATUER STREET) TO START AT THRU-ROOF CONNECTOR, HENCE IN PVC TO CORNER OF DRIVEWAY WHERE GROUND ROD IS TO BE DRIVEN.

8 0 8 16
SCALE OF FEET

DESIGNED: L. GORMAN	SUB SHEET NO.	TITLE OF SHEET	DRAWING NO. 999 41,001
CADD B. WEYER	E6	SAMPLE FIRE/INTRUSION ALARM RISER DIAGRAM LIGHTNING PROTECTION	PKG. NO. 108
TECH. REVIEW:		NAME OF PARK	SHEET 43 OF 43
DATE: 10/94			

8/20/01 09:22 C.EVERMAN R15 S:\SYM\USER\WPS10\FINAL-SET\ELEC\E6.DWG

APPENDIX D

Sample Amendment or Modification

SAMPLE COVER SHEET
SAMPLE REVISED SHEET

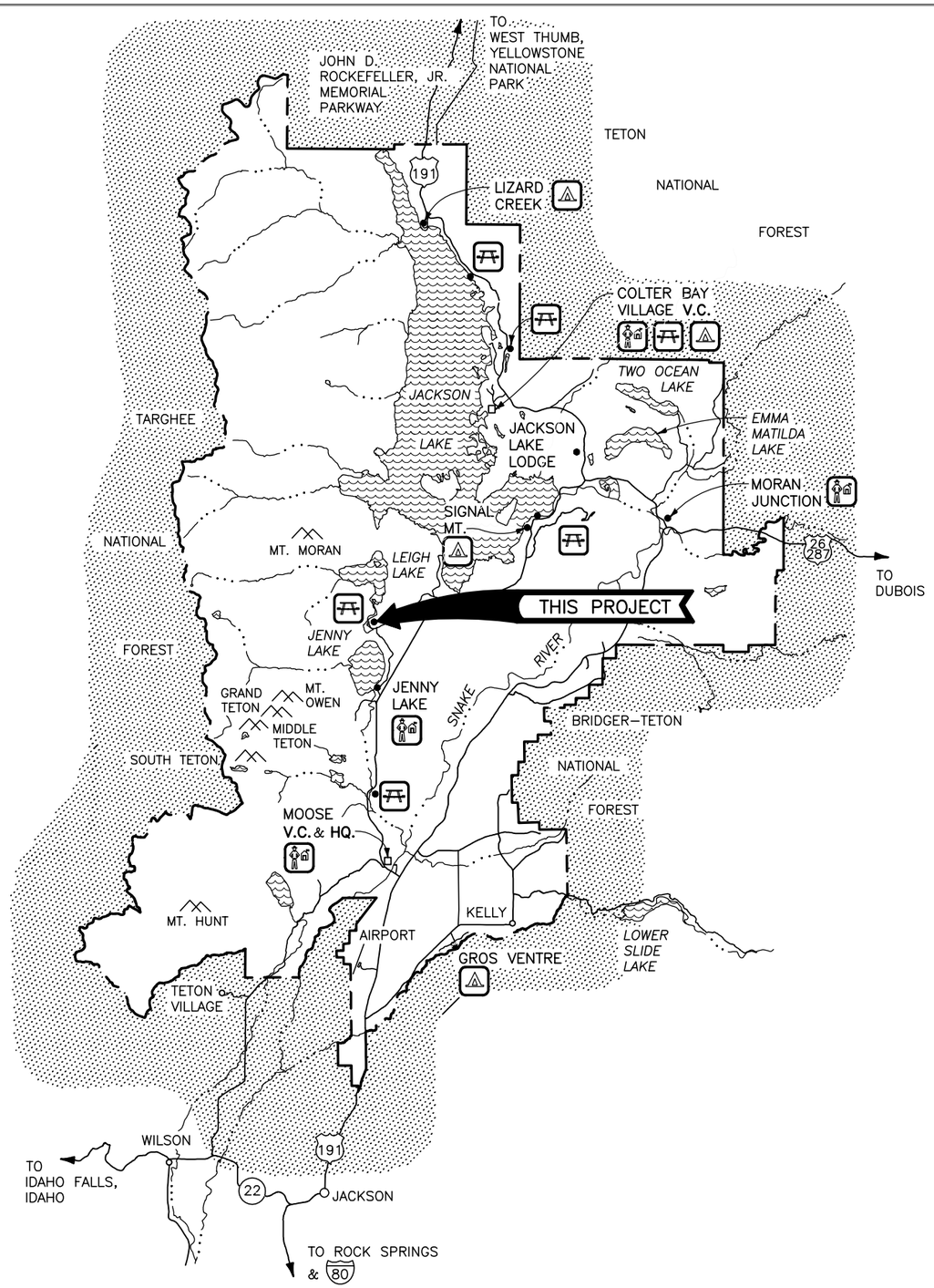

GRAND TETON NATIONAL PARK

LEGEND

- PARK BOUNDARY
- STATE LINE
- PAVED ROAD
- UNPAVED ROAD
- RIVER
- V.C. VISITOR CENTER
- HQ. PARK HEADQUARTERS
- RANGER STATION
- PICNIC AREA
- CAMPGROUND

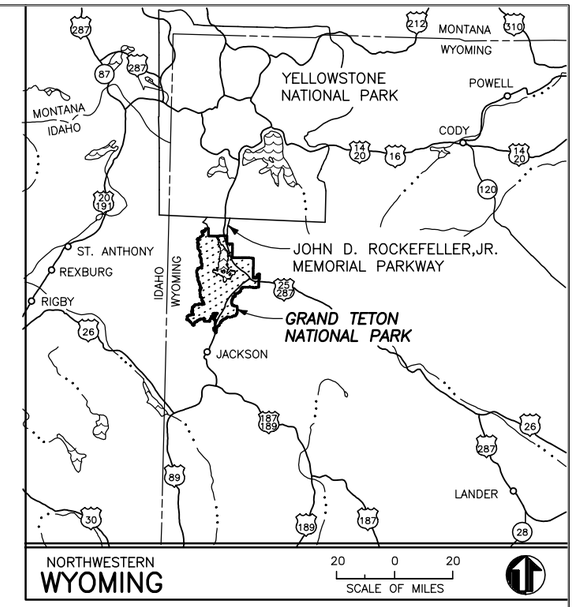

INDEX

PROJ. NO. GRTE108
1443IB160092123

SCALE OF MILES
2 0 2 4 6
2 0 2 4 6 8
SCALE OF KILOMETERS

Mark	Sheet	REVISION	Date	Initial
1	1A,4A, 7A	AMENDMENT OR MODIFICATION NO. 1; REVISED SHT. 1,4,7	4/93	L.E.N.

QUALITY DESIGN CERTIFICATION
[X] Prepared in Accordance with Design Development (Title I) _____ Drawing No.
OR
[ ] Variance from Design Development (Title I) Approved by Superintendent on _____ Date
OR
[ ] Construction Drawing Not Preceded by Design Development (Title I)

(SIGNATURE) 10/94
Project Manager Date

CONSTRUCTION DRAWINGS
UNITED STATES
DEPARTMENT OF THE INTERIOR
NATIONAL PARK SERVICE
DENVER SERVICE CENTER

TITLE OF DRAWING
SITE IMPROVEMENTS
LOCATION WITHIN PARK
LEIGH LAKE PICNIC AREA
NAME OF PARK
GRAND TETON NATIONAL PARK
REGION ROCKY MTN. | COUNTY TETON | STATE WYOMING

DRAWING NO. 999 / 41,001
PKG. NO. 108
SHEET 1A OF 43

BASIC DATA: U.S.G.S. TOPOGRAPHIC MAP 1968; COVER SHEET REVISED & REDRAWN 8/93.

8/16/01 17:25 C.EVERMAN R15 P:\PROJ\NPS-10\FINAL-SET\GEN\COV-MOD.DWG

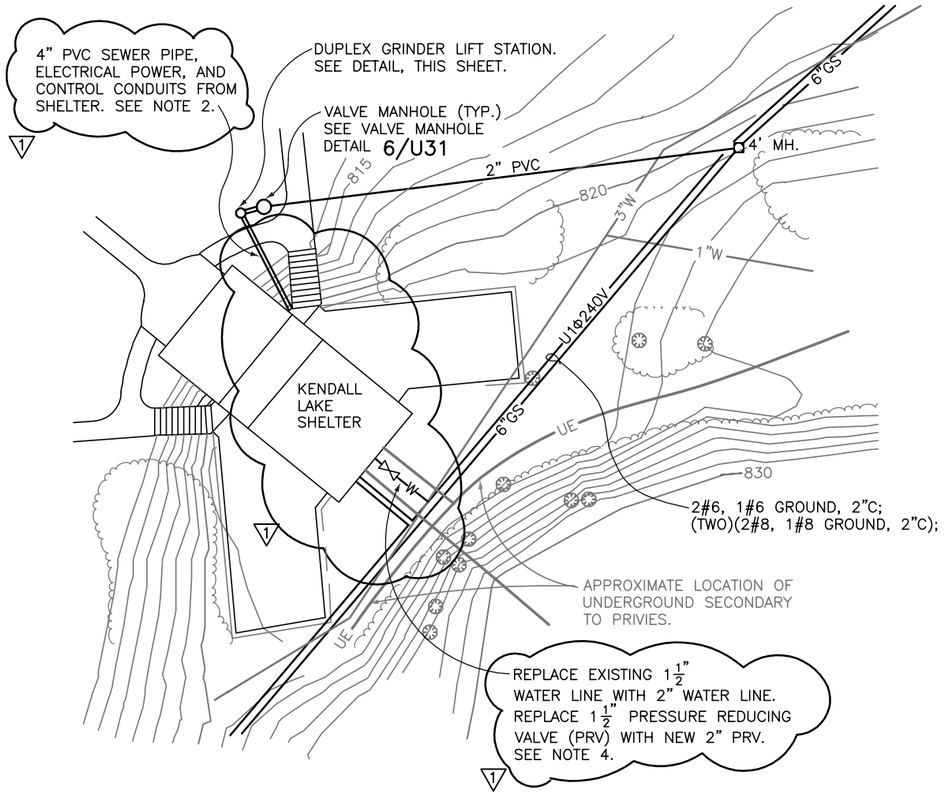

PLAN

20 0 20 40

SCALE OF FEET

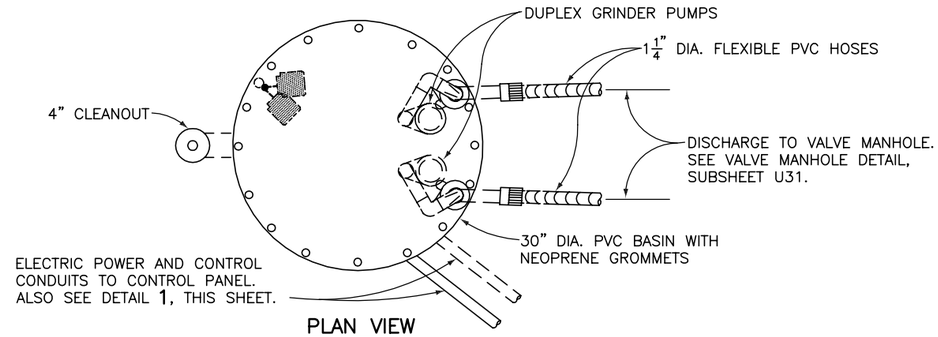

PLAN VIEW

NO SCALE

NOTES

1. PROVIDE ELECTRICAL SPLICE BOX WITH CORD GRIPS INSIDE OF PVC BASIN
2. 4" PVC SEWER TO EXIT BUILDING BELOW THE FOOTER. ADJUST HEIGHT OF LIFT STATION INLET TO MAINTAIN A MINIMUM OF 0.25 IN./FT. SLOPE. THE INLET SHALL BE A MINIMUM OF 4'–6" BELOW GRADE. SEE SHEET M6 FOR SHELTER PLUMBING ISOMETRIC. (1)
3. 2" PVC FROM LIFT STATION TO MANHOLE SHALL MAINTAIN A MINIMUM COVER OF 4'–0" AND ENTER THE MANHOLE AT AN ELEVATION OF APPROXIMATELY 815.7'.
4. 1 1/2" PVC WATER LINE AND GATE VALVE TO BE REPLACED WITH 2" PVC WATER LINE AND GATE VALVE. REPLACE 3"x3"x1 1/2" TEE WITH 3"x3"x2" TEE. (1)
5. SEE SHEET E10 FOR ADDITIONAL ELECTRIC POWER AND CONTROL CIRCUIT INFORMATION.

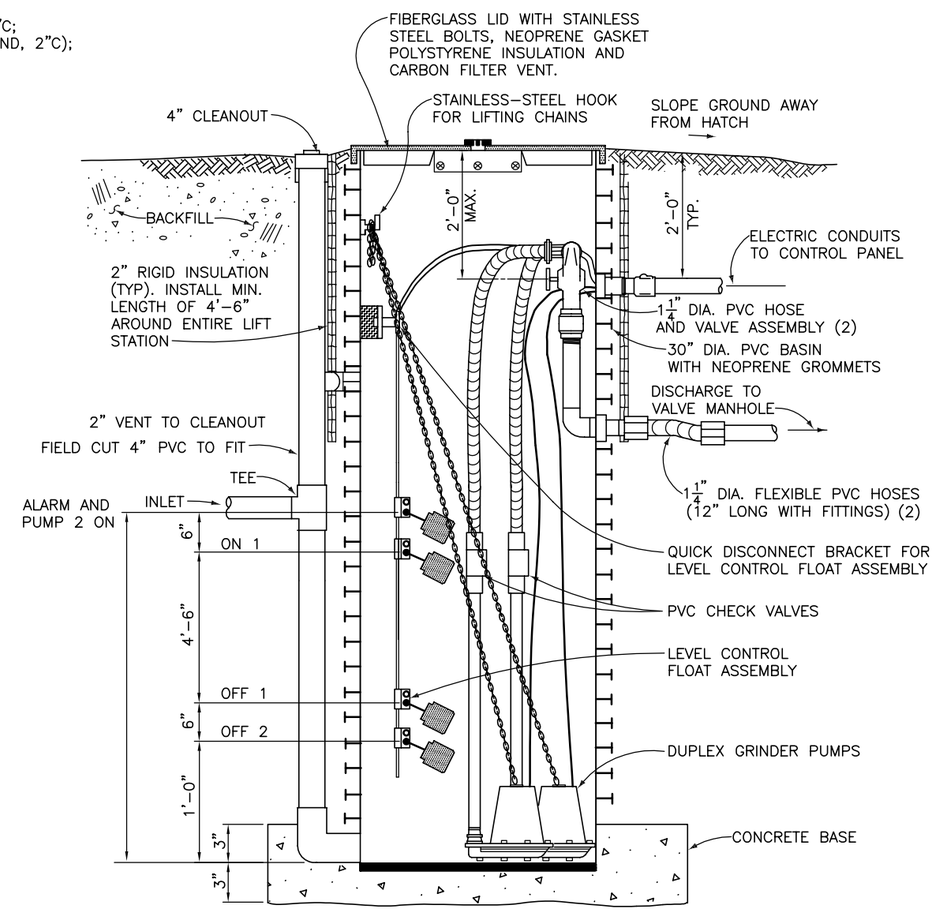

DUPLEX GRINDER LIFT STATION (30" DIA.)

NO SCALE

DESIGNED: J. SMITH	SUB SHEET NO.	TITLE OF SHEET	DRAWING NO.
CADD J.JONES	U3	SAMPLE PLAN AND DETAILS	999 41,001
TECH. REVIEW:			PKG. NO. 108 / SHEET 7A
DATE: 10/94		NAME OF PARK	OF 43

8/23/01 11:26 C.EVERMAN R15 S:\SYM\USER\NPS10\FINAL-SET\GEN\U3_MOD.DWG

APPENDIX E

Sample As-Constructed Drawing Cover Sheet

SAMPLE COVER SHEET

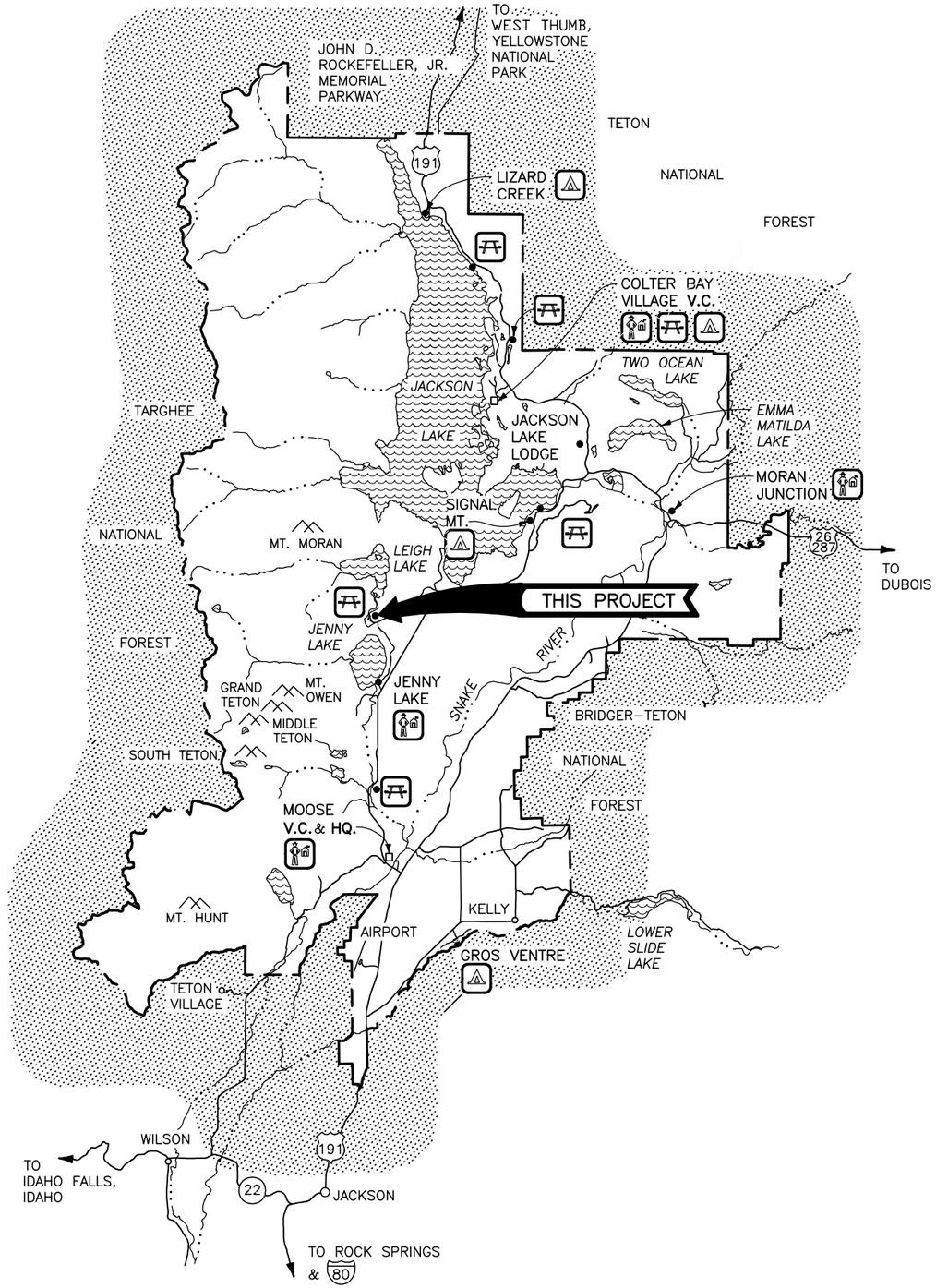

GRAND TETON NATIONAL PARK

LEGEND

— — —	PARK BOUNDARY
— — — —	STATE LINE
———	PAVED ROAD
- - - - -	UNPAVED ROAD
——··——	RIVER
V.C.	VISITOR CENTER
HQ.	PARK HEADQUARTERS
	RANGER STATION
	PICNIC AREA
	CAMPGROUND

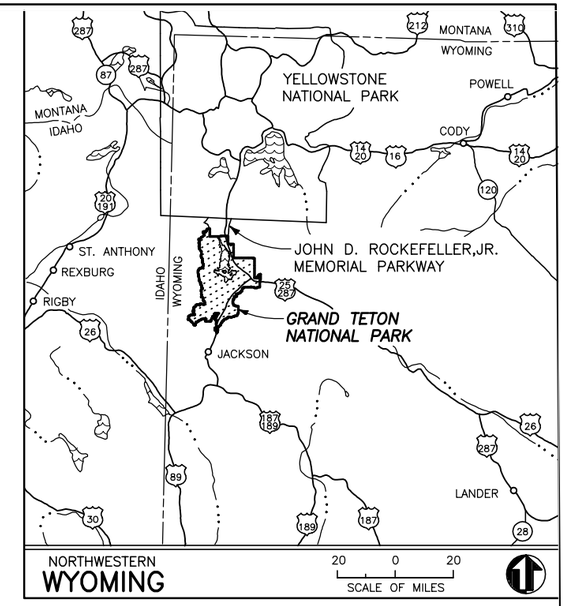

INDEX

Ⓐ AS CONSTRUCTED DRAWING

PROJECT NO. GRTE108
CONTRACT NO. 1443CX160092123
PROJECT SUPERVISOR: M.J.'SMITH
CONTRACTOR: JONES CONSTRUCTION
1111 W. HAWAII
SEATTLE, WASHINGTON

SCALE OF MILES
2 0 2 4 6
2 0 2 4 6 8
SCALE OF KILOMETERS

Mark	Sheet	REVISION	Date	Initial
1	1A,4A, 7A	AMENDMENT NO. 1; REVISED SHT. 1,4,7	4/93	L.E.N.
2	1B, 13A	MODIFICATION NO. 1; REVISED SHEET 1,13	5/93	L.E.N.
A	ALL	AS–CONSTRUCTED	11/93	L.E.N.

QUALITY DESIGN CERTIFICATION
[X] Prepared in Accordance with Design Development (Title I) _____ Drawing No.
OR
[ ] Variance from Design Development (Title I) Approved by Superintendent on _____ Date
OR
[ ] Construction Drawing Not Preceded by Design Development (Title I)
(SIGNATURE) 10/94
Project Manager Date

AS–CONSTRUCTED DRAWINGS

UNITED STATES
DEPARTMENT OF THE INTERIOR

NATIONAL PARK SERVICE
DENVER SERVICE CENTER

TITLE OF DRAWING
SITE IMPROVEMENTS
LOCATION WITHIN PARK
LEIGH LAKE PICNIC AREA
NAME OF PARK
GRAND TETON NATIONAL PARK

REGION	COUNTY	STATE
ROCKY MTN.	TETON	WYOMING

DRAWING NO. 999 41,001A
PKG. NO. 108
SHEET 1 OF 43

BASIC DATA: U.S.G.S. TOPOGRAPHIC MAP 1968; COVER SHEET REVISED & REDRAWN 8/93.

8/16/01 17:25 C.EVERMAN R15 P:\PROJ\NPS-10\FINAL-SET\GEN\COVER-AB.DWG

INDEX

A

C

D

E

F

I

L

M

N

O

P

R

S

T

V

W

X