D-2023
File: NPS-General
March 1983

NPS TRAILS MANAGEMENT HANDBOOK

UNITED STATES DEPARTMENT OF THE INTERIOR
NATIONAL PARK SERVICE

PLEASE RETURN TO:

TECHNICAL INFORMATION CENTER
DENVER SERVICE CENTER
NATIONAL PARK SERVICE

ON MICROFILM

NPS TRAILS MANAGEMENT HANDBOOK

United States Department of the Interior
National Park Service
Denver Service Center

CONTENTS

INTRODUCTION 1

SAFETY MESSAGE 3

LOCATION GUIDELINES 4
- General Criteria 4
- Specific Criteria 5

DESIGN GUIDELINES 9
- Specific Design Elements 9

BASE CONSTRUCTION GUIDELINES 13
- Turnpike Construction 13
- Puncheon Construction 16
- Corduroy Construction 16
- Tread Construction 19
- Retaining Walls 19
- Switchback Construction 19

SIGNING 23
- General Criteria 23

DRAINAGE GUIDELINES 27
- Drainage Methods 28
- Criteria for Fords and Bridges 34

OVERNIGHT TRAIL FACILITIES 36

MAINTENANCE GUIDELINES 39
- Maintenance Process 39
  - Trail Log 40
    - Maintenance Levels 40
    - Types of Trails 42
  - Condition/Corrective Surveys 43
  - Maintenance Activities 42
  - Annual Maintenance Plan 46
  - Cost Estimating 48

GLOSSARY 49

BIBLIOGRAPHY 53

ILLUSTRATIONS

Berm Surface 14
Turnpike Section 15
Built-up Puncheon 17
Corduroy Construction 18
Retaining Wall 20
Switchback 22
Trail Sign 25
Grade Dips 29
Rock Water Bar 30
Log Water Bar 31
Log Culvert 32
Rock Culvert 33
Foot Bridge 35
Trail Log and Condition/Corrective Survey 41
Travelway Clearing 47

INTRODUCTION

This "Trails Management Handbook" presents guidelines for foot and horse trails. It has been prepared to assist NPS employees in selecting trail locations; in designing trails; in preparing the bases of trails, using various construction techniques; in following sign specifications; in choosing drainage methods; in considering overnight trail facilities; and in maintaining trails. Developing a well-planned trail will enhance and reinforce the visitors' experience.

Trails are not simply avenues for getting from one place to another; they offer visitors to the national parks opportunities to participate in numerous recreational activities. Trail users have special interests that are manifested in their desires to pursue specific trail-related activities. Whether viewing beautiful scenery, testing outdoor skills, escaping the confines of a structured environment, socializing with other users with similar interests, or even becoming better informed, the degree to which these pursuits are satisfied is a measure of the appropriateness of a trail.

Providing quality recreational opportunities while protecting the resource is a major trail management concern and challenge. Mode of travel, trail environment or setting, physical demands on the user, imposed controls, expectations of the user, and volume of use are translated into trail planning objectives and management criteria.

In addition, a trail should be designed and constructed to produce minimum disturbance to the natural environment, to ensure the safety and enjoyment of the users, to protect adjacent resources, to consider the aesthetic quality of an area, and to adequately function for the intended use. Long-term planning is needed to accomplish these goals. Anticipation of a potential environmental impact should be reflected in proper trail planning and development to minimize adverse effects or eliminate them entirely.

The information in this handbook should be used as a guideline. Each park designs its own plan of operation, which includes particular management objectives, imposed controls, construction standards, and cost analysis.

The guidelines are also presented to assist in trail management decisions. A supervisor in charge of a trail project, given the guidelines and the objectives of trail management, will make the appropriate decisions related to the specific trail that is being considered.

The topics discussed are in the normal sequence in which trail development occurs. Employees are encouraged to submit any comments as to the applicability or completeness of the information contained in this handbook. After a field-testing period of at least one year, the handbook will be reevaluated for accuracy and content. Comments should be sent to the following address:

Lennon Hooper, Trails Coordinator
National Park Service
P.O. Box 25287
655 Parfet Street
Denver, CO 80225

For definitions of unfamiliar terms, please refer to the glossary in the back of the handbook.

SAFETY MESSAGE

The NPS "Safety Management Handbook," Occupational Safety and Health Administration regulations, and other federal agency safety standards should be used for safety guidelines in trail work. New employees will be given safety instructions and be trained or tested to ensure that they are physically able to competently use all of the tools on the job.

Trail crews frequently work in isolated areas where medical facilities are not readily available, and transportation of an injured person is often difficult and dangerous. Good safety practices demand that each crew member keep in good physical condition and maintain a high level of safety consciousness at all times, in camp as well as on the job. One member of the crew should be assigned the responsibility for safety. In addition, every employee must be his or her own safety inspector on the job, work in a safe manner, and point out unsafe practices to other crew members.

THINK SAFETY

LOCATION GUIDELINES

The specific objectives of trail location are to design a trail that produces a minimum impact on the land, to choose a corridor that is visually pleasing, to take advantage of natural terrain and vegetation, and to provide a trail that requires minimum maintenance.

In addition to a knowledge of the location objectives, a trail locator should envision the completed trail while proceeding along a selected corridor. A mental perspective is gained through experience in laying out trails, in supervising or observing construction, and in critiquing the final product against the location criteria. A well-located and well-designed trail should reflect the mood and atmosphere of the area it traverses.

A trail locator should also be aware of the terrain, vegetation, soil types, weather (wind, rain, snow), drainage patterns, and cultural resources along and adjacent to a trail corridor. All of these factors and many more directly influence where the trail should be located and subsequently how well the trail will function.

GENERAL CRITERIA

The following general guidelines are to assist in selecting a trail location:

Existing trails should be integrated with new construction as much as possible providing old trails were properly laid out and have good drainage.

Terrain and elevation changes should not be extreme.

The route should be planned for minimum maintenance while providing maximum ecological variety (i.e., use forest edges bordering meadows, rather than crossing meadows, when possible).

Location should be suitable for both winter and summer activities to the degree that visitor or management needs, terrain, and climatic patterns will allow.

Access points to trailheads should be provided as feasible.

Exposure on high elevation ridges may be necessary and scenic but not mile after mile.

For interpretative purposes, the trail should meander to take advantage of scenic panoramas and historic, cultural, and natural resources.

Main trail networks should be located to disperse visitors away from fragile or heavily used areas.

Aerial photography should be used to locate features of scenic, scientific, and recreational values. An aerial flight over a proposed trail corridor would also be helpful.

SPECIFIC CRITERIA

The following specific guidelines must also be considered when selecting a trail location:

Wildlife

Areas of critical or sensitive habitat should be avoided.

Trails should skirt areas where big-game species concentrate; however, trails should contain vistas, observation points, or overlooks for observing wildlife at a distance.

A trail should avoid areas where potentially serious impacts on plants or animals may occur.

Soils

Trails should be located on stable soils except where short sections, up to 50 yards, could be structurally contained and/or a relocation could create more conflict in construction and maintenance.

A trail should be routed around extended bedrock areas except where grade or possible scenic features make a crossing desirable.

Soil maps should be developed and used to locate unstable soil areas and to identify feasible areas for trail location and construction.

Some soils are not suitable for trail tread, and alternative material must be provided.

Road and River Crossings

Special attention should be given to the problems that traffic and traffic-related noise could create for hikers and horse riders.

When roads are crossed at grade, adequate sign marking and visibility must be provided.

Scenery and Drinking Water

A trail should be located to overlook streams and lakes but not be directly adjacent to the water's edge.

Meander trails should provide water access points for visitors, as well as for pack and saddle stock. Water should be available every one to four hours of travel.

Safety Hazards

Talus slopes or rockslide areas should be avoided.

Avalanche zones should also be avoided.

Abrupt or unexposed cliffs should be avoided.

Areas with concentrated numbers of snags should be avoided if possible. If not, plan during construction to remove snags that are adjacent to the trail.

A trail should, if possible, avoid areas of erosion, snowbank, bogging, or icy surface potential.

Severe high wind corridors and lightning prone areas should be avoided.

Natural shelters along a trail should be used.

Bridge crossings should be avoided if a relocation of a trail could make the structure unnecessary.

Natural or existing features should be used to allow visitors an easy and quick crossing without breaking the continuity of a trail.

Trail crossings over or under roads, aqueducts, underpasses, bridges, and power transmission lines should be made at right angles to minimize cost if a structural installation is necessary and to avoid prolonged visual contact with those features.

A trail should enter and leave water on a descending and ascending grade parallel to the shoreline to prevent water from draining down the trail.

Stream fords should be over cobblestone-sized (or smaller) rocks. Any abundance of 10-inch diameter (or larger) rocks that make horse crossings dangerous should be removed or avoided.

Provisions for User Facilities

Accesses at varying distances along the trail should be provided. The locations must be well thought-out so that users can choose trips of various lengths.

Areas where stock could be stabled, corralled, or tethered should be located away from and downwind from campsites, but within sight of the stockman's campsite.

Existing nearby parking areas, campgrounds, stock handling areas, or other trailhead facilities should be used where possible.

Hitching rails should be located near trails so riders can secure their horses at rest stops and scenic areas.

Spur accesses should be provided to campsites rather than locating a main trail through a campground.

Shelters and comfort stations should be provided where needed according to each park's general management plan and development concept plan.

Alignment

The ideal alignment should offer visitors the best views from the trail.

The alignment should follow the contours of the land and be generally curved. Sharp angular turns over 50 degrees and long straight stretches should be avoided.

Hillside alignments should, wherever possible, angle across the natural slope and take advantage of natural drainage to minimize the need for major drainage modifications. Proper drainage is a long-term investment, which pays off in reduced future trail maintenance.

The most desirable alignment for a switchback uses a topographic feature as a turning point to prevent cutting across the natural terrain. Provisions for screening and protecting the switchbacks with trees or brush should be incorporated into the design when the trail cannot be constructed around a natural topographic feature.

A trail should not appear to be carved out of a hillside.

Grade

A clinometer or Abney level should be used to determine grades. (Do not set by guesswork.)

Trail grades should be contoured to avoid steep topography where possible.

As a general rule, a grade should not be steeper than 10 percent (10-foot rise in 100 linear feet). Grades of less than 7 percent are ideal.

Generally, steps are recommended for any short stretches where a grade is steeper than 25 percent. (Steps are not recommended on horse trails.)

No grade should be so steep that erosion is a continuous problem.

Trails should not be located at zero grades, if possible, because some grade is desirable to provide for proper drainage.

A grade should undulate gently to provide natural drainage and to eliminate monotonous level stretches and long steep grades that are tiring to trail users.

Grades should be reduced at approaches to switchbacks, and the turns should be as nearly level as practical.

A trail designed especially for hikers could incorporate short sections of steps or steeper grades within the controls indicated if these will not cause undue disturbance and adequate drainage can be provided to prevent erosion.

Major consideration must be given to soil types, climatic conditions, volume and type of use, and location when planning grades to ensure minimum trail erosion.

DESIGN GUIDELINES

The design of trails should be in keeping with the purpose of a trail. In general, a trail should be designed to produce minimum disturbance to the natural environment. A trail design should also consider the safety and enjoyment of the users, the volume and type of traffic, the protection of adjacent resources, and the aesthetic quality of an area. The design should also incorporate features to minimize adverse impacts on the environment, result in a trail of high quality and durability, and require the lowest cost to maintain.

SPECIFIC DESIGN ELEMENTS

Dimensions

Trail dimensions should be based on the type and volume of use anticipated, on the stability of native materials, and on the type of terrain along the route. Generally, a trail tread width should not be less than 18 inches (minimum) for foot trails and 24 inches (minimum) for horse trails. Additional width could be required to reduce impacts from heavy traffic.

The following exceptions to the above trail dimensions should be noted:

> Along a precipice, steep hillside, or hazardous area, where possible, a trail base should be at least 36 to 60 inches wide to allow trail users and horsemen to safely use the trail at the same time.
>
> A tread at least 36 inches wide should be used for special trail sections, such as fords through small streams or built-up sections across flat areas.
>
> Switchback landings and graded trails should be designed to minimize the amount of excavation and the amount of bank that has to be cut.

Clearing Requirements

Clearing requirements vary with the intended trail use.

Bushes and trees should be cut flush with the ground, and then exposed stumps should be covered with soil. Trees and stumps should be removed if the tree roots will interfere with grading. Leaning trees that might fall across the trail should be cut.

Clearings at waterholes, resting places, and scenic points should be wide enough to allow stock to pass if riders of a party are dismounted.

Chain saws should not be used to clear limbs because of safety and noise factors and the likelihood of scarring tree trunks. Tree limbs should be cut flush to the tree and then scattered away from the trail. The butt ends of limbs should face away from the trail. Limb stubs should be

painted to hide tree scars if desirable in scenic locations. Every effort should be taken to make the scene look natural, with minimal impact from man.

Trail Structures

Structures should generally be of quality material to permit long life and be designed to harmonize with the surrounding environment.

Minor structures such as corduroy, puncheon (elevated sections), retaining walls, and foot bridges (under 30 feet) could be built of suitable native material if it is available. When native material is used, the site from which it was removed should be left with as natural an appearance as possible.

Bridges located in high volume areas should be solid and have hand railings so constructed that children cannot easily slip through.

Wheelchair accessibility, where provided, requires a smooth transition from the trail surface to the bridge.

In designated wilderness areas, structures should be limited to those necessary for user safety, built from native material when possible, and must conform to the requirements of the Wilderness Act.

If a bridge is not necessary for horses to cross a stream, a large log with a hand railing may be provided for trail users.

The Denver Service Center will provide special designs for crossings of rivers when needed.

Trail Surface

When native soil cannot support the traffic, tread-surfacing material should be used which blends with and preserves the natural environment. This material should also be used to minimize severe conditions of erosion, dust, mud, or loose rock in crossing rockslide areas.

User Facilities

Trailhead loading docks, sanitary facilities, parking areas, and water supplies should be given individual analysis and design. If it is administratively decided to construct such facilities, local trail clubs may be helpful. Also, the Denver Service Center may provide plans and guidance.

Revegetation

During the design process, adequate revegetation should be planned for cut-and-fill slopes, borrow pits, or other areas where surface vegetation

has been removed. Follow-up action should be included to ensure complete revegetation. Seed mixes, volume of application (pounds per acre), and season of application should be keyed to local conditions.

BASE CONSTRUCTION GUIDELINES

The existing ground surface should not be unnecessarily disturbed to obtain a trail base, especially on flat areas. On level ground, the trail base should be formed by building up rather than cutting down. All duff should be removed before making cuts or fills for the tread.

Construction of hillside trails usually requires grading a shelf for the trail, but if the existing surface is flat and provides a suitable tread, it should be left undisturbed. Hillside excavation may not be necessary on slopes less than 10 percent.

On slopes, grading should start at the upper slope stake and continue down to the finished grade. The usual procedure is to scratch a continous line between the upper slope stakes, using a shovel or Pulaski. Excavation should begin along this line. The working surface should be kept level or slightly in-slope until the final grade is reached. On slopes 20 percent or over, the trail base should be constructed totally in native soils. Fills on slopes greater than 20 percent are hard to maintain, and fills on slopes that exceed 40 percent are often unsafe for horse traffic. They tend, when wet, to overload the downslope, leading to soil creep and slump not only in the fill section but also in the underlying slope, and to extensive shear-cracking in the tread. (Some park specifications require full-bench construction on sideslopes of over 20 percent.)

A soil berm along the outside of a trail should only be used when the trail fill consists of loose, disintegrated granite or other unstable material that may erode easily. The use of a soil berm is related to special handling of surface runoff drainage (see Berm Surface illustration). In areas with annual precipitation of 80 inches or more, or heavy spring runoff, berms are not recommended. In areas of this type that have heavy annual precipitation, the outer edge of the trail should be at least 2 inches lower than the inside.

A rock berm should be used for safety purposes on horse trails where the sideslope is 80 percent or greater to keep the horse from walking on the outer edge. The trail base should also be widened to provide an adequate tread area. If soil or rock berms are used, more frequent maintenance is usually required to keep the berm intact.

Every effort should be made to locate a trail around problem areas. Constructing a trail in lowland areas normally requires special construction techniques, such as turnpike, puncheon, or corduroy.

TURNPIKE CONSTRUCTION

Turnpiking is a process of using material from parallel side ditches to build up the trail base (see Turnpike Section illustration). This process should be used primarily in flat areas that are wet or become wet during the rainy season. The most important consideration should be to get the water level down below the trail base and carry the water under and away from the trail at frequent intervals. When ditch material is of poor

berm-surface drainage

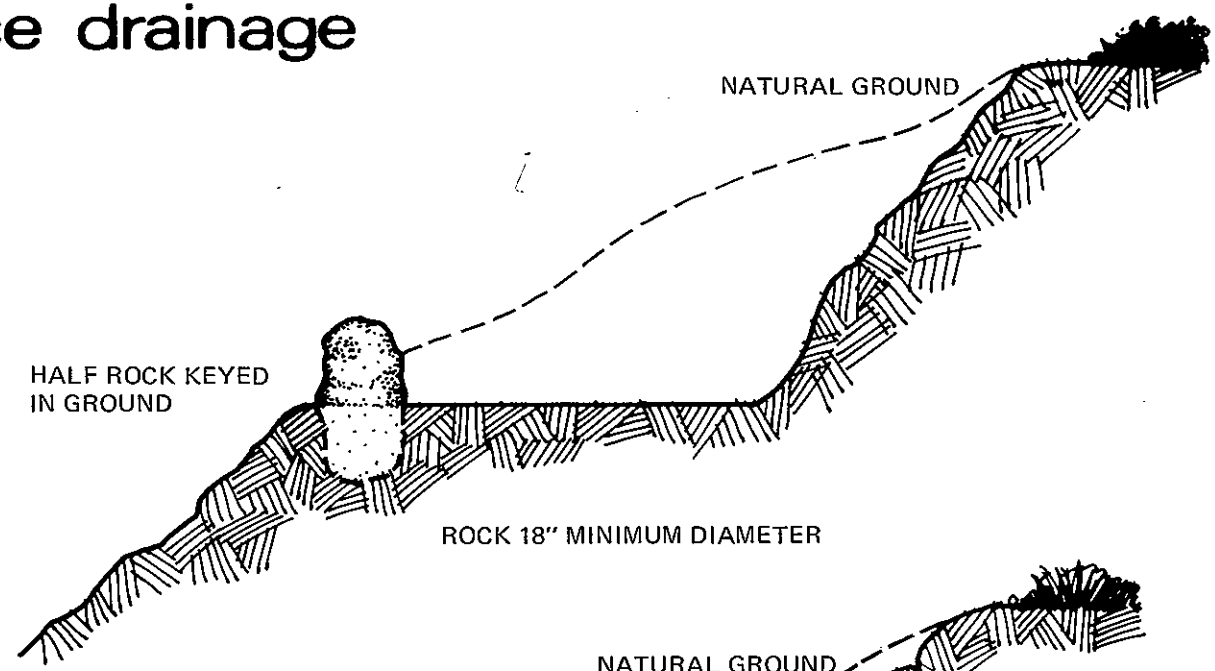

KEYED ROCK ON SHOULDER EDGE

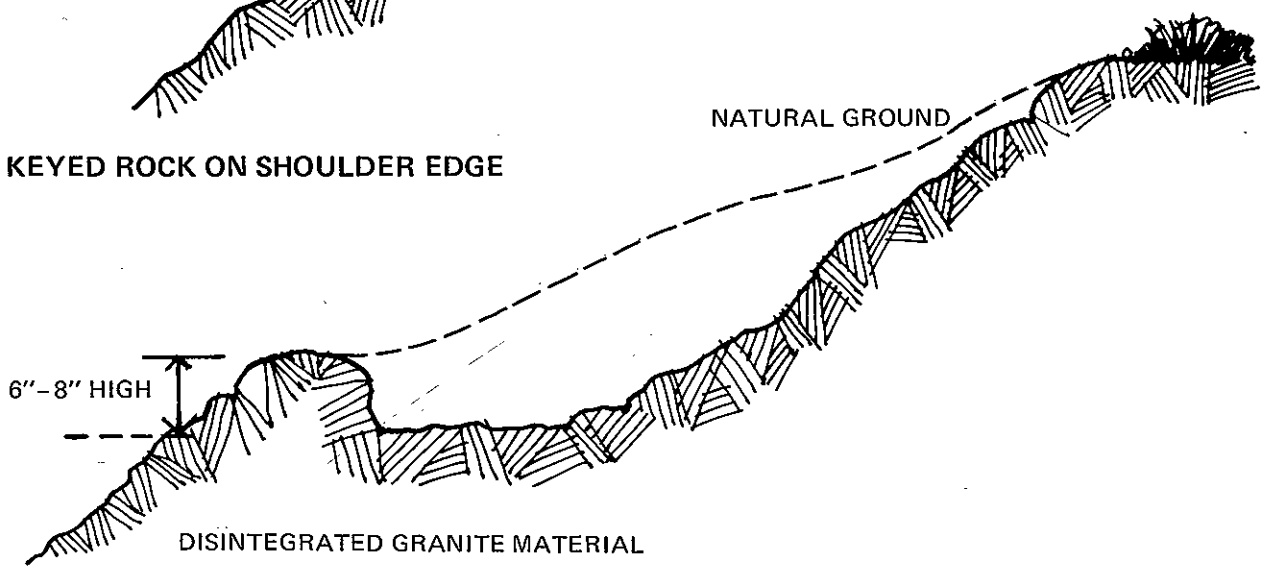

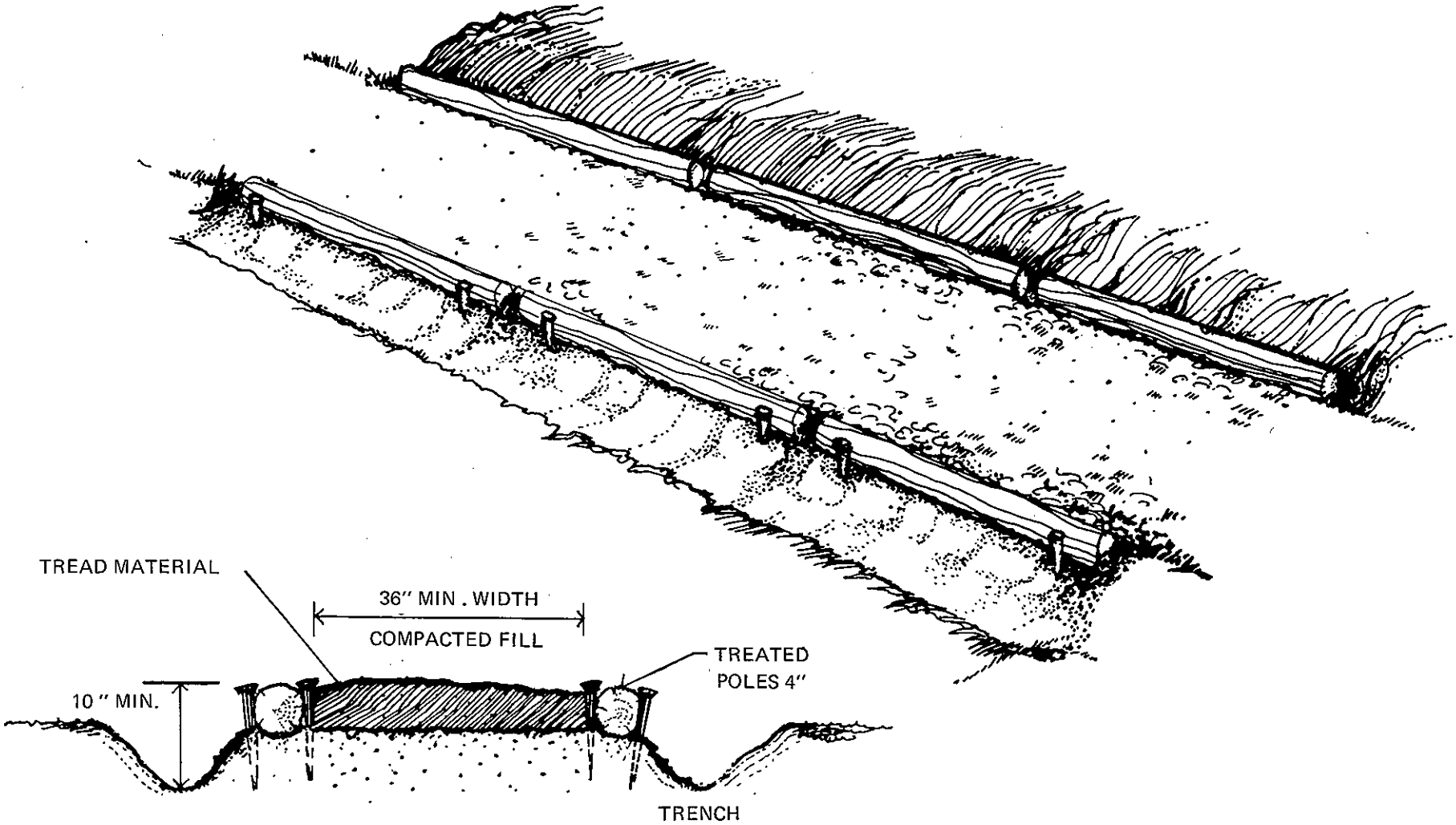

turnpike section

boggy soil, it may be necessary to import better material from nearby areas to build up the base. Blasting techniques may be used to form these ditches. Only properly trained and certified personnel may be permitted to do the blasting.

Small boggy areas in the trail should be filled with large flat rocks, if practical. This is an effective way to treat these areas, but to give a satisfactory footing the rocks should be covered with gravel or another stable material as a tread.

PUNCHEON CONSTRUCTION

Puncheon construction uses sawed, treated timber or native logs to elevate the trail tread above wet areas that are not feasible to drain or to use a turnpike process (see Built-up Puncheon illustration).

Puncheon consists of a deck, or flooring, approximately 4-feet wide using treated planks or adzed logs laid on stringers. The stringers should be set on mud sills and should generally be placed at each edge of the widened trail at about 3-foot centers. The mud sills should be set at right angles to the trail at 6- to 8-foot intervals. Proper subdrainage should be provided under the stringers and mud sills.

The puncheon should be leveled from side-to-side, and the entire structure should extend far enough so that soft spots or jump-offs do not develop at the ends. Approaches to each end should be installed on a modest grade, not to exceed 5 percent. In backcountry areas, a step up may be used.

The decking should be securely spiked to the stringers, and a binding pole or guard should be spiked along each edge to keep traffic in the center of the puncheon. Where practical to do so in areas with less than 60 inches of rainfall a year, the utility and life of the structure can be increased by covering the deck with a layer of dirt to cushion the traffic and save wear on the deck planks caused by shod horses.

CORDUROY CONSTRUCTION

Corduroy construction is basically a primitive type of puncheon. This process consists of laying three native logs (about 6 inches in diameter) on the ground as stringers, with approximately 5-foot cross logs (4- to 6-inch diameter) laid side-by-side across the stringers and bound together with wire or nails (see Corduroy Construction illustration). If native soil is placed over the deck, logs should be lashed along the edges to retain the material. The top of the deck should be flattened for ease of walking if soil is not used. Corduroy, normally short-lived, is considered a temporary measure until a more permanent solution can be installed. This type of construction is found frequently in backcountry areas.

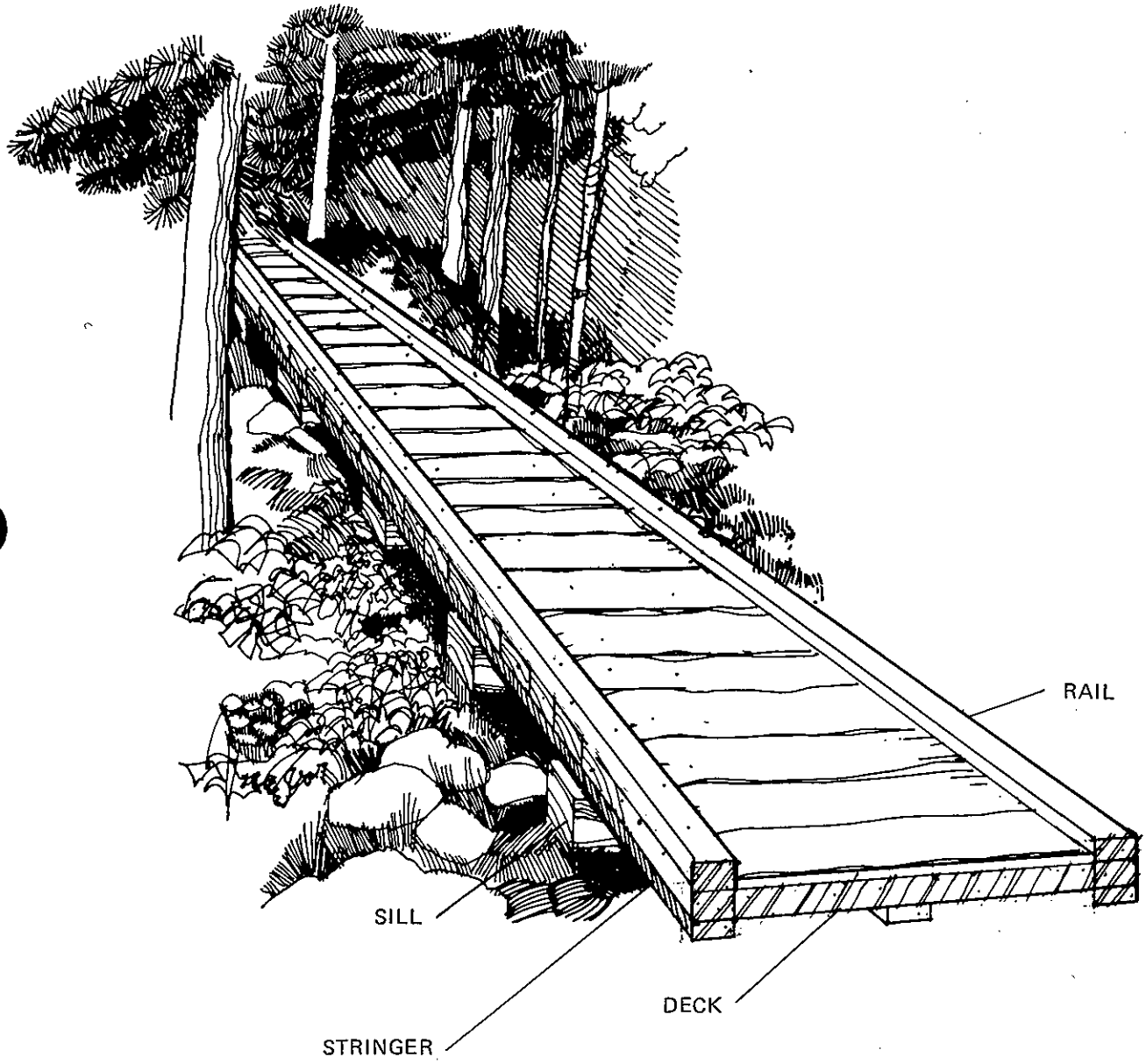

built up puncheon

USING DIMENSION LUMBER

corduroy construction

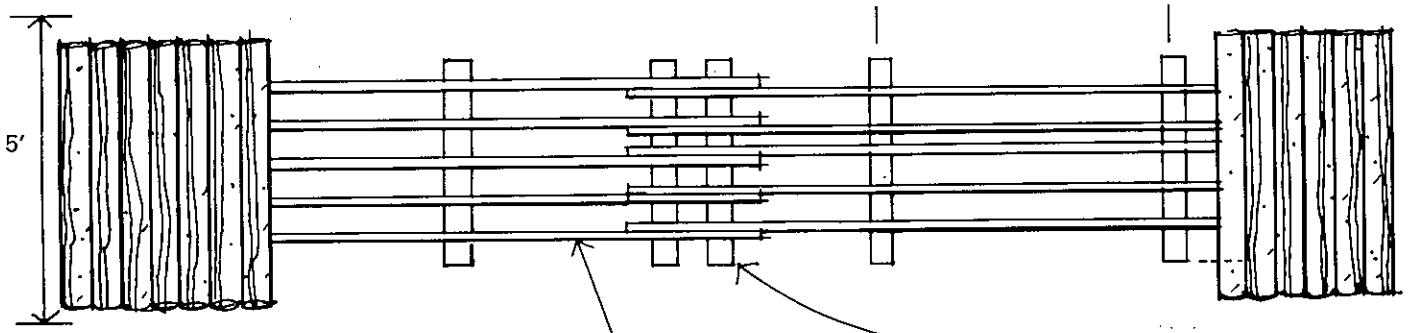

PLAN

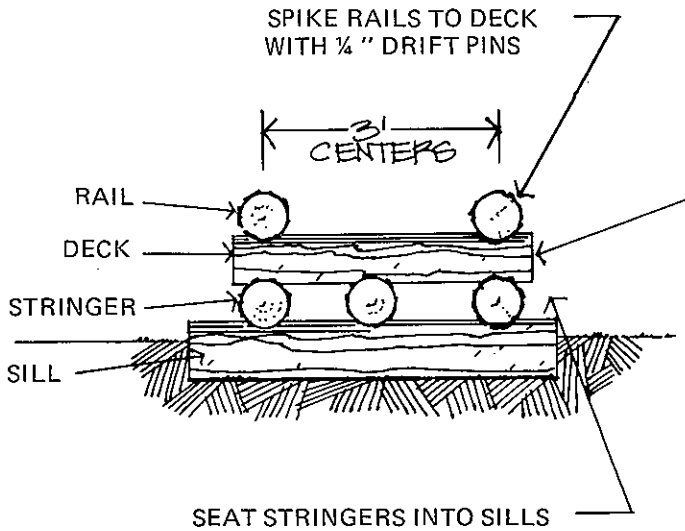

CROSS SECTION

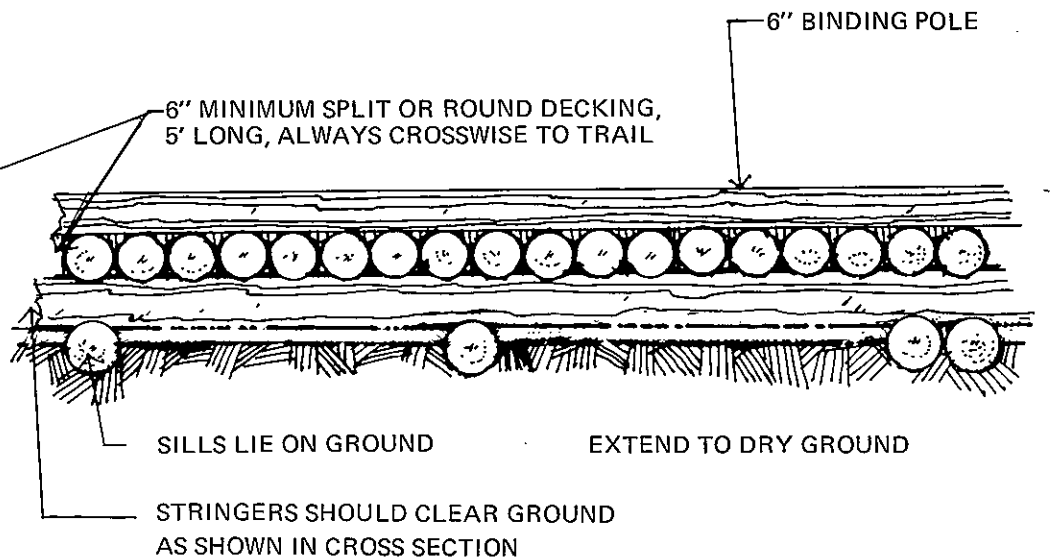

LINEAR SECTION

TREAD CONSTRUCTION

Normally, native soil used to construct a trail base is adequate to handle foot traffic and light horse use. Hauling in tread material is costly and should only be used for extreme needs, such as on heavily used trails, in wet areas, or across rockslide areas, or to provide footing across solid rock areas (see Typical Tread Base Cross Section illustration).

If surfacing is required, native gravel in the area should be used first. If no gravel is available onsite, gravel should be imported from another area. Gravel should be loaded by hand and hauled by duffel carrier, wheelbarrow, or packhorse panniers, when mechanized access is not possible and practical.

The depth-and-width of surfacing should be determined in each case based on the quality of the native material and the use anticipated on a trail. As a general rule, 3 inches of gravel should last three to five years, allowing for 10 to 15 horses per day over the trail.

RETAINING WALLS (CRIBBING)

Retaining walls are structures of wood or stone designed to stabilize a trail base on a sideslope. Sound durable rocks having a good bearing surface are the preferred structural material. Native logs or other untreated timber should be used only if rock is not readily available and only when sideslopes do not exceed 50 percent. A solid foundation on earth or rock is a must to obtain a rigid, safe retaining wall.

The thickness of a rock retaining wall at the base should be at least one-half the height of the wall, or a minimum of 2 feet if the vertical height is less than 5 feet.

Joints in the walls should always be staggered at least 6 inches or more horizontally. At least one-fourth of the front and rear faces of the wall should be headers having a length of at least two and one-half times their thickness. All headers should be laid with their greatest dimension extending into the wall and never parallel to it except at corners. Here, alternating headers should cross. All projecting points should be removed from the top and the bottom of the main rocks so that each is laid with good bearing on the broadest face. The outer face of the wall should have an inward slope of at least 3 inches to every foot of height. The wall should have a front and rear face well-tied together with header stones of suitable size.

Drainage is required around, beneath, or through the retaining wall so that water will not accumulate behind it.

SWITCHBACK CONSTRUCTION

Switchback construction is a method of gaining required elevation in steep country without making the trail too steep or when there is a limited working area. The technique is to reverse trail direction as often as

retaining wall

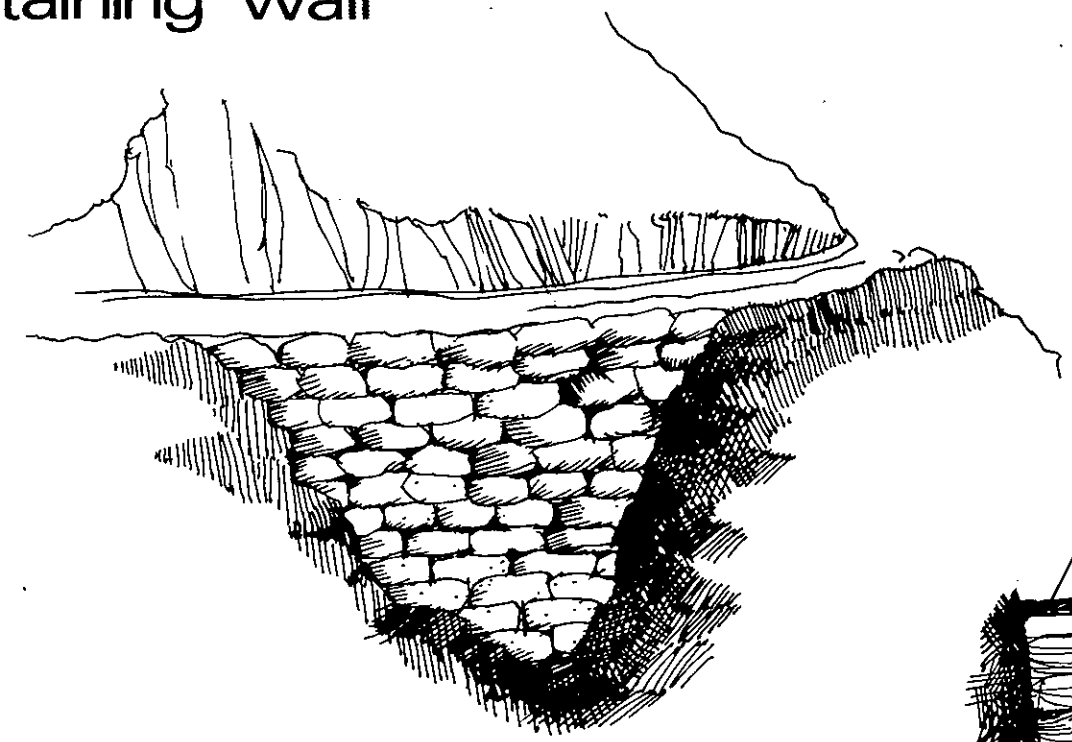

PREPARE A FOOTING IN SOLID EARTH OR ROCK
USE LARGEST ROCKS ON BOTTOM
FOR HEADERS' USE LARGE LONG ROCKS

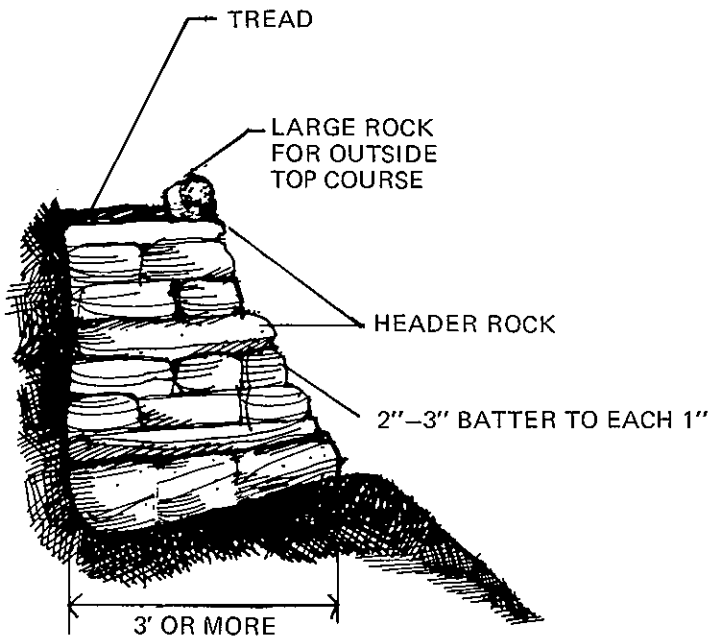

CROSS SECTION

necessary to achieve the required elevation gain (loss) while maintaining grade. Switchbacks also help prevent erosion by reducing the required steepness of the climb and by providing plans for water to leave the trail.

When switchbacks are necessary, the turns should be constructed as flat as possible. On sideslopes of less than 20 percent, the switchback should be treated as any other section of the trail by following a long radius curve. If this results in the centerline grade being steeper than desired, the radius should be shortened, and a conventional 8-foot radius switchback should be built, with the grade of the upper and lower legs meeting at the radius point. Excavation should start along the upper slope stake line of the upper leg and should be carried down to grade at the radius point before starting the lower leg. In order to provide proper drainage, the upper leg should be cut well out beyond the radius point, then shaped, and the turn area completed (see Switchback illustration). When possible the frequency and visibility of turns should be limited to avoid shortcutting. Also, the layout should vary.

Rock or log barriers should be installed between the lower and upper legs of the switchback. Provide 15 to 30 feet of barrier back from the turning point to prevent foot or horse traffic from cross-cutting inside the switchback, creating ruts followed by erosion.

switchback

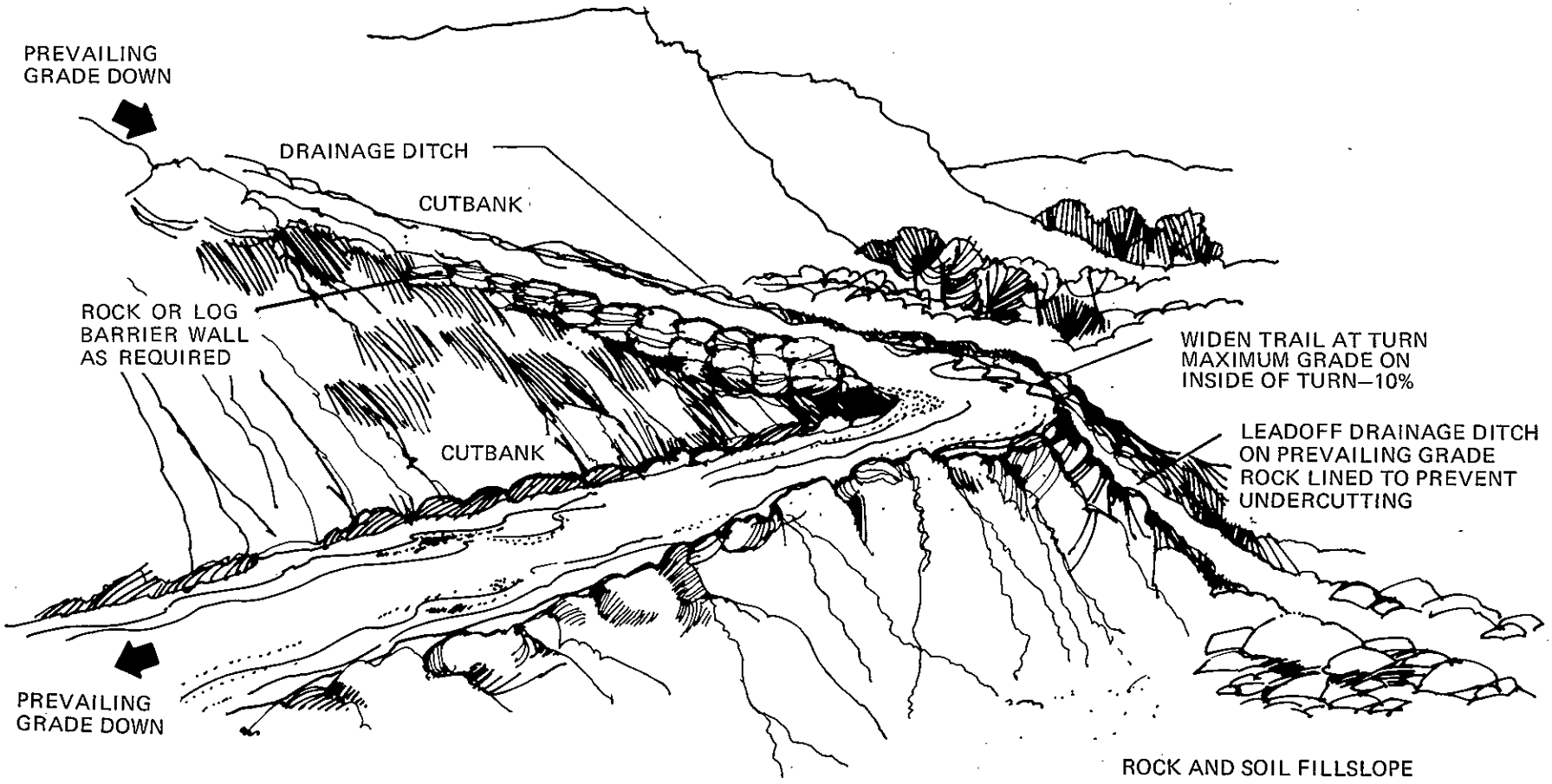
PREVAILING GRADE DOWN
DRAINAGE DITCH
CUTBANK
ROCK OR LOG BARRIER WALL AS REQUIRED
CUTBANK
WIDEN TRAIL AT TURN MAXIMUM GRADE ON INSIDE OF TURN—10%
LEADOFF DRAINAGE DITCH ON PREVAILING GRADE ROCK LINED TO PREVENT UNDERCUTTING
PREVAILING GRADE DOWN
ROCK AND SOIL FILLSLOPE

SIGNING

Trail signing should meet the objectives of the park's resource management plan. An approved sign plan should be developed to effectively meet those objectives; this may be developed and maintained as part of a trail log and condition survey.

Appropriate symbols for trails in the National Park System should be posted at beginning terminus and, as necessary, at other access points (see Trail Sign illustration). Trails should be adequately marked to warn visitors of safety hazards, to inform visitors of limitations and restrictions, and to guide visitors along the trail.

Signing needs vary according to the type of trail. Users of primitive trails do not want a constant stream of messages, whereas users of highly developed trails desire more information. The use of trail signs or wayside exhibits normally increases with more developed trails, but efforts should be made to use them only when there is a good reason. The sign should be located just far enough off the trail so vandals must step off the trail to push sign over or mark on.

Handmade signs should be prohibited on all trails, although occasional temporary emergency signs to warn of safety hazards could be expected. Nonprofessional signs reduce the aesthetic quality of a park.

Trail signing should conform to the requirements of the NPS "Sign System Specifications" manual.

GENERAL CRITERIA

Signs at trailheads and junctions should identify the trail by name and distance to major points along the trail. If the trail is accessible for wheelchairs, the proper symbol should be incorporated on the sign.

Trailblazes, symbols, and cairns may be used to delineate and define a trail. They can be used to mark trails in both wilderness and nonwilderness areas.

Cairns should be used in alpine areas where vegetation is low to the ground. They should be constructed to resist extreme weather conditions and the pushing and rubbing of animals. They should be built as broad as they are tall, using large rocks, and placed at short regular intervals from 100 to 300 feet apart.

A trailblaze (a standard 4-inch by 5-inch diamond made of wood, metal, or plastic) can be attached to trees or posts using aluminum nails and drive about 1 inch, so as the tree grows it will not push the sign off the first couple of years. A trailblaze should not be used on trails in wilderness areas.

Trailblazes and blazes should be of any color except orange. (Local and state standards should be checked.) Orange is the standard color reserved for snowmobile trails. White is being used for the Appalachian Trail, blue for its connecting trails.

Destination and directional signs should be used on trails to inform visitors of particular features, roads, or spur trails that appear on trail maps.

TRAIL USERS
Permits are required for all backcountry camping.
Firearms,pets, and vehicles are prohibited on trails.

trail sign

DRAINAGE GUIDELINES

No factor in trail construction is more important than proper drainage. Many sections of trail have been damaged or destroyed by erosion that could have been prevented. All drainage should be planned far ahead of construction.

DRAINAGE METHODS

Perhaps the most troublesome drainage problem in trail construction is subsurface water. The best solution for extensive subsurface water on flat ground is to relocate the trail on a hillside, if possible, and bypass the trouble. If this is not practical, the next best solution is to lower the water table and permit the ground above to dry out sufficiently to support the trail loads. As a last resort, puncheon or turnpike construction should be used to raise the trail level.

In some cases, drainage ditches can be dug to divert subsurface water into a stream. Drainage ditches should be designed and built to provide continuous service without unusual maintenance. Perforated culverts, or French drains, should be used when open ditches are not practical.

Surface water will flow along a trail and erode the trail surface if allowed to accumulate above a certain critical combination for soil type, slope, and velocity. Any provision for the discharge of surface water should include precautionary measures to prevent silting, erosion, or gullying of areas off a trail. Rock placement at the discharge point should help dissipate the water and stop erosion.

Surface water can be diverted by outsloping, grade dips, water bars, culverts, ditches, and by varying the trail grade when it is constructed. Approximately ½ to 1 inch per 18 inches of slope across the trail tread is normally sufficient, but this should be based on a specific soil type. The best method to use when dealing with surface water would be to reduce the length of time running water is allowed to stay on the tread by increasing the frequency of structures designed to remove water.

Outsloping

Outsloping is most satisfactory when used in combination with grade dips and should not exceed 1 inch in 18 inches. Outsloping of the tread is probably the best, most commonly used method to divert surface water. This method requires periodic maintenance to prevent the formation of a rut or channel in the trail.

Grade Dips (Coweeta Dips)

Grade dips are sections of trail where a short piece of the trail, generally 5 to 15 feet, has been built with a grade slightly adverse to the prevailing grade of the trail (see Grade Dips illustration).

The trail should be outsloped at a low point in a dip to divert the water from the trail. Grade dips are most satisfactory when they are built as part of the original construction and when the designed grade allows for the adverse grade. They are cost-effective in controlling erosion and reducing the monotony of long-sustained grades. They are far more maintenance-free than water bars. In some cases the upper portion of a grade dip may be too steep for proper maintenance. An alternate method in this case is to build water bars.

Water Bars

Effective water bars minimize the speed, volume, and distance travelled by water down a trail. The actual number and spacing of water bars depends on the steepness of slope, the amount of water entering a trail, the construction of the tread (hillsides or steps), and the availability of places to divert water. Generally, the greater the slope and the more water channeled by a trail, the greater the need for water bars. Placement should be near the top of the slope to catch water before it gains momentum.

To build either a rock or log water bar, a trench should be dug across the trail at a 30- to 45-degree angle. Bars placed at less than 30 degrees may slow water too much, causing the bar to clog with silt and debris. Bars placed at 30 to 45 degrees or more tend to clean themselves as water flows freely off the trail. Bars placed at more than 45 degrees produce scour erosion along the bar face. The trench should be free of rocks and roots (see Rock Water Bar illustration).

If using wood, a log should be placed in the trench, with over half of its diameter below the tread. The log should be solidly placed, if possible, wedging it between rocks and a ledge. If using stakes, the uphill side of the log should be notched before installation to accept each stake driven. Set into the log in this way, the stakes should not catch debris that could clog the water bar (see Log Water Bar illustration). Water bars are normally found only on general hiking trails.

Culverts

Culverts are primarily used to pass water under and across a trail. Culverts are most effective in natural drains where minimum excavation is required. In flat lowlands requiring turnpike tread sections, culverts act as equalizing channels to reduce the damming effect of the built-up tread.

Culverts may be metal, concrete, wood, rock, plastic, or any other suitable material (see Log Culvert and Rock Culvert illustrations). Culverts should be installed with a gradient of at least 2 percent and properly bedded to ensure continued performance. The exception would be flatland application. A minimum of 6 inches of soil (free of sharp rocks) is recommended for pipe cover. Pipe diameters less than 12 inches may present frequent cleaning problems.

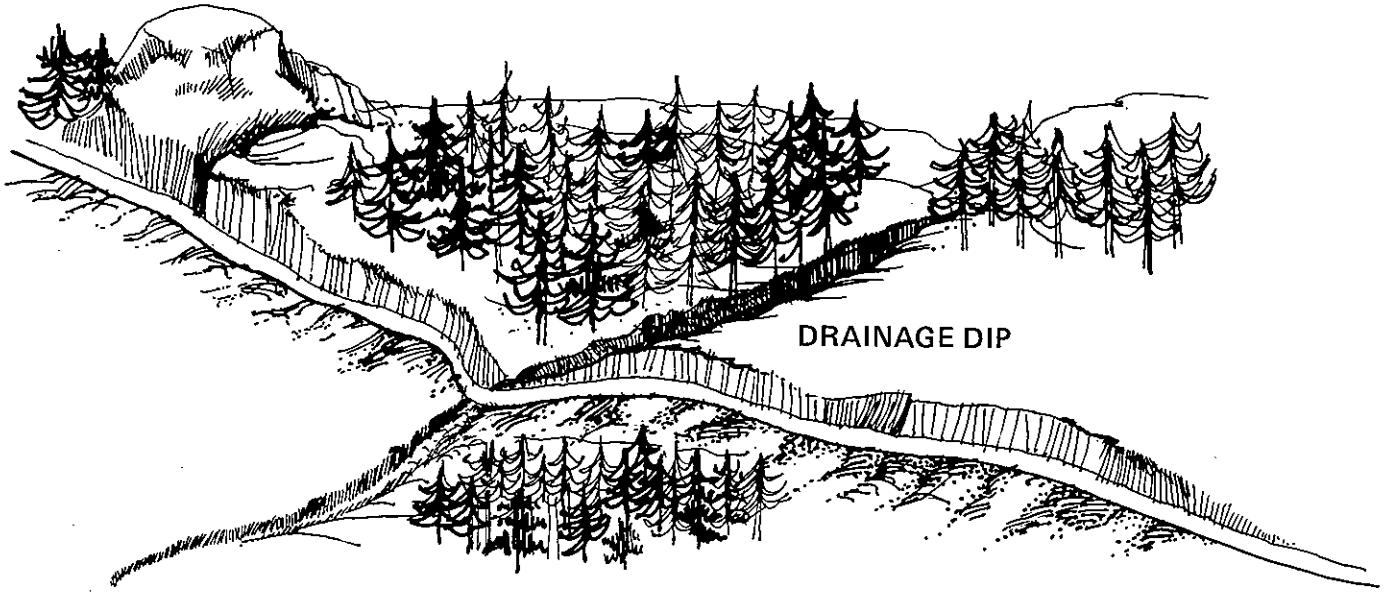

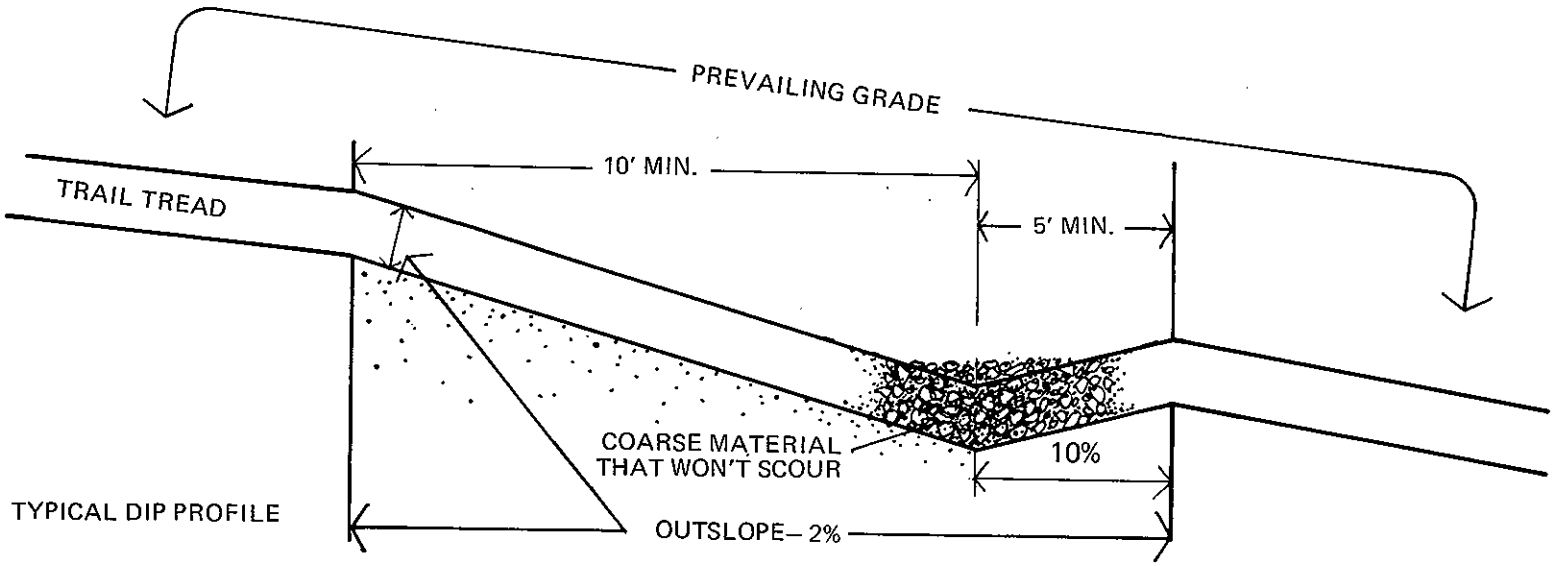

grade dips

DRAINAGE DIPS

rock water bar

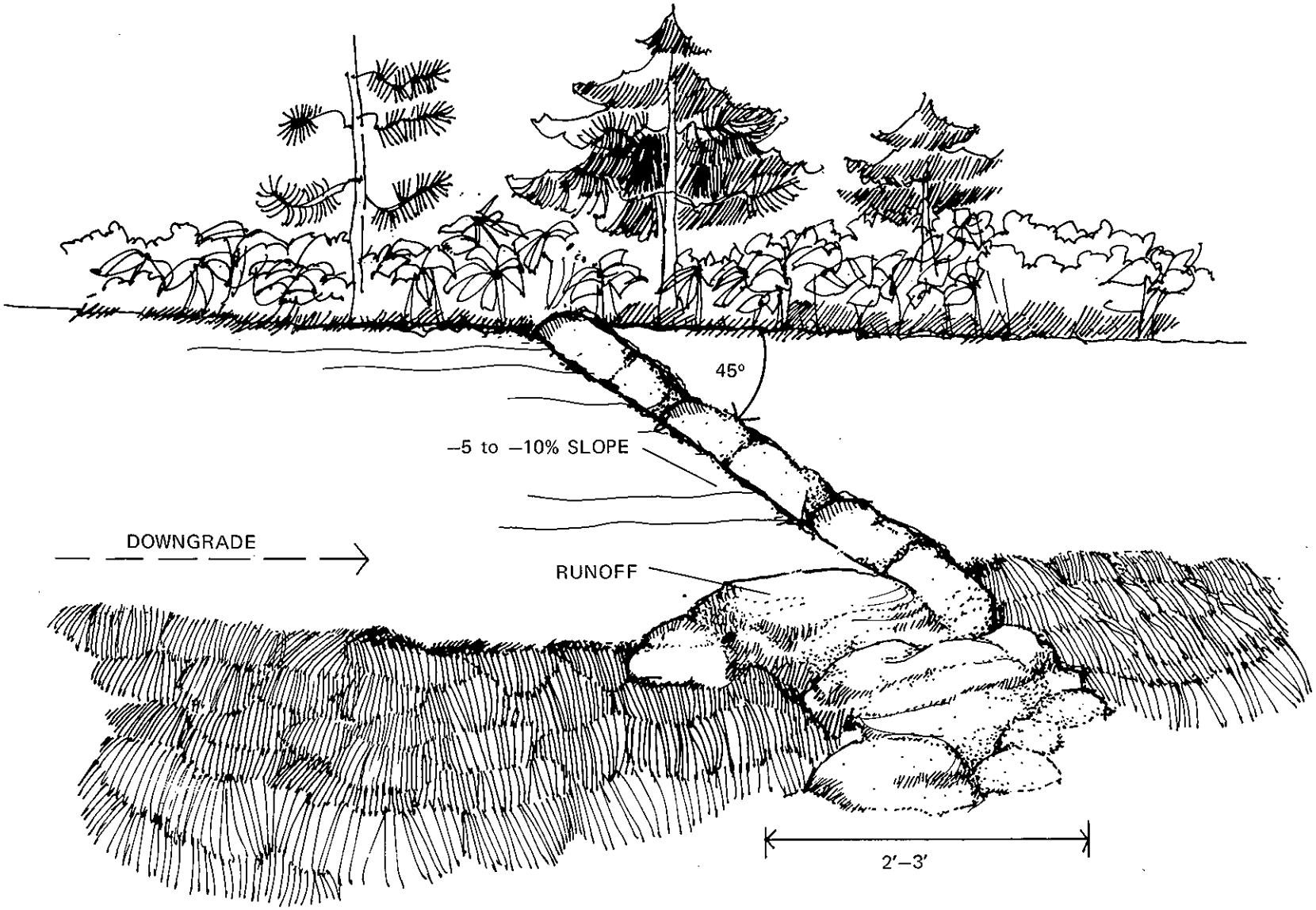

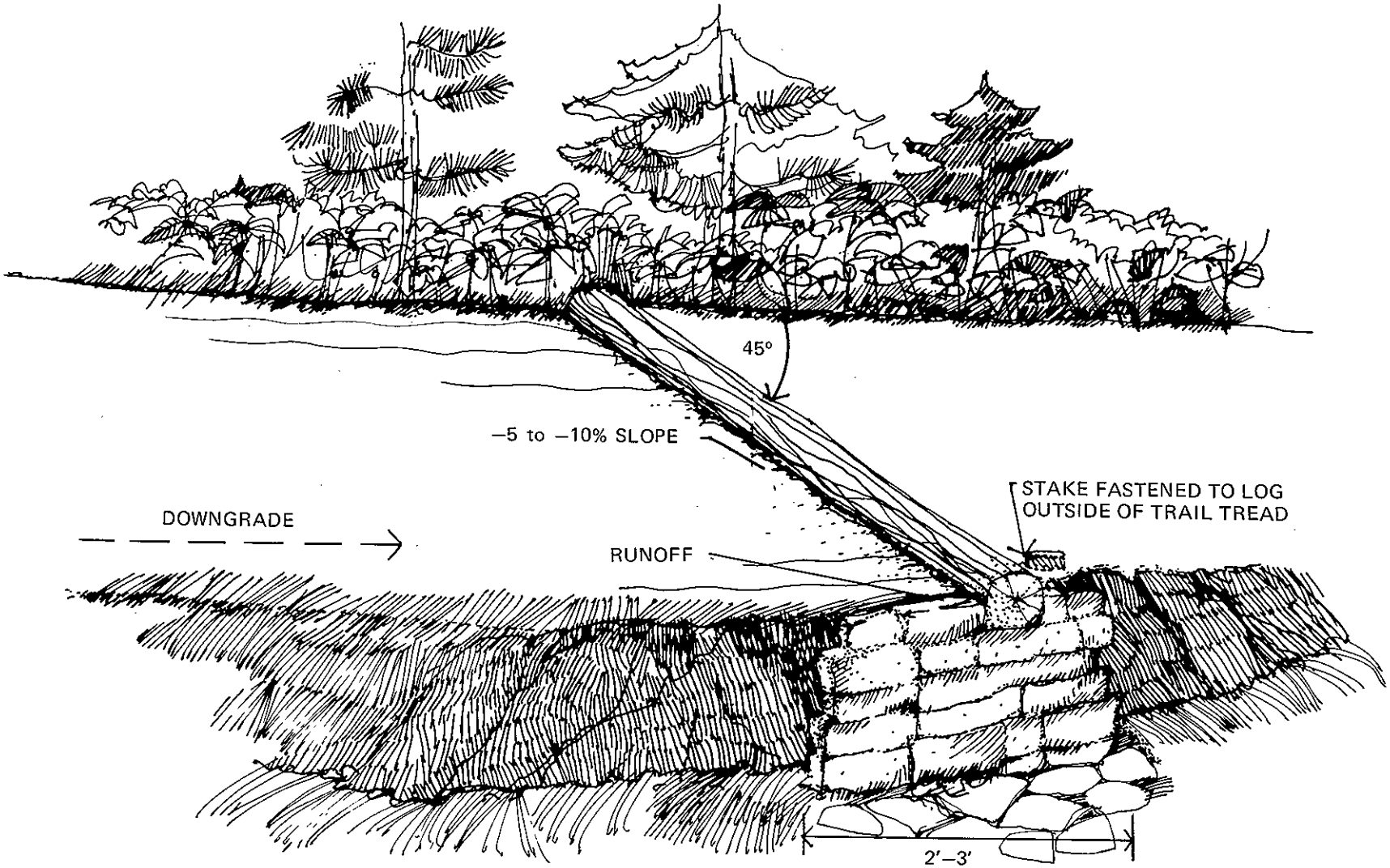

log water bar

log culvert

USE MOST DURABLE SPECIES AVAILABLE:
CEDAR, FIR, LARCH, PINE, SPRUCE—IN THAT ORDER (PEEL ALL LOGS)

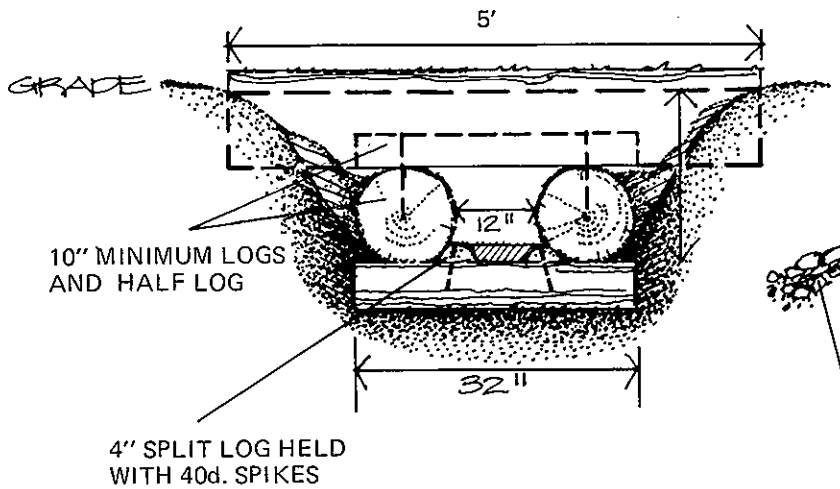

END

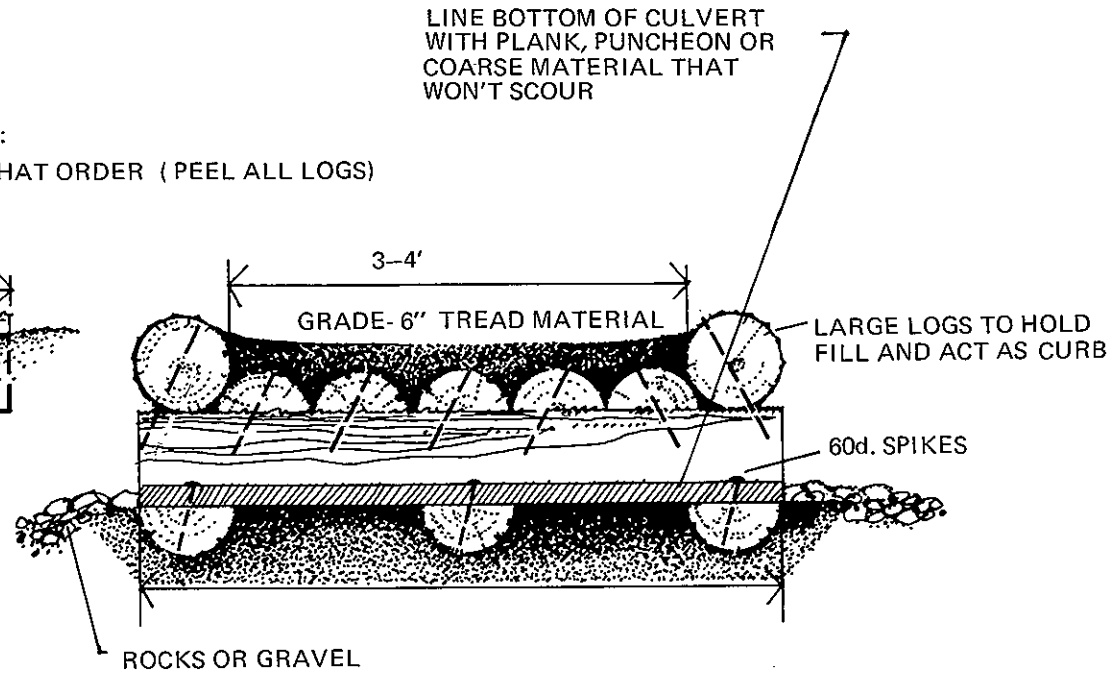

SECTION

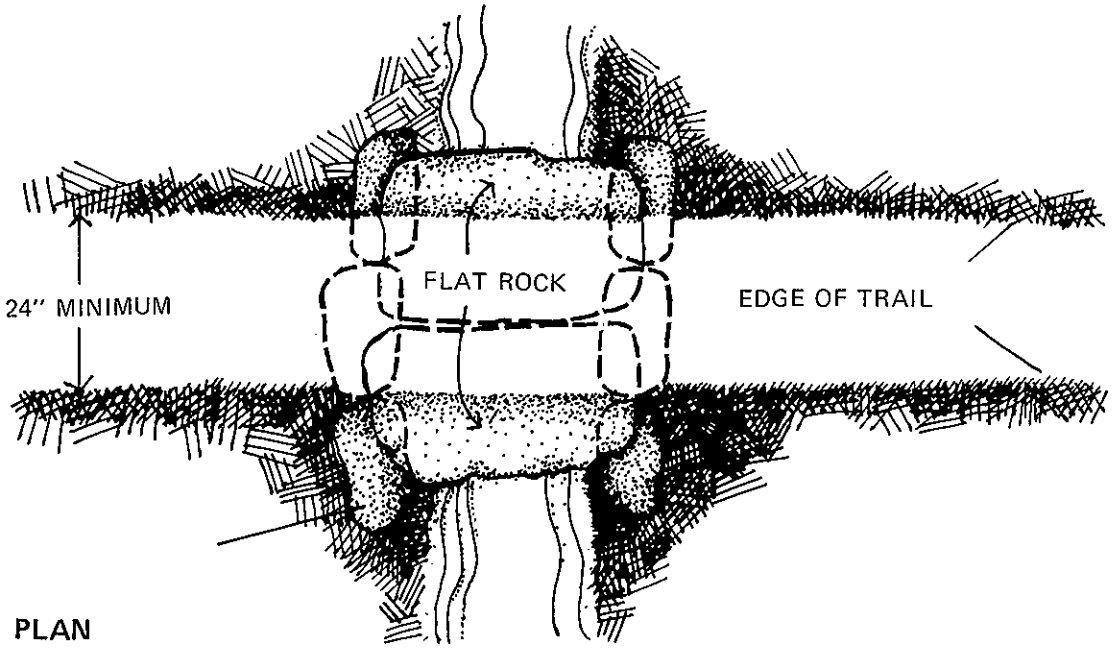

PLAN

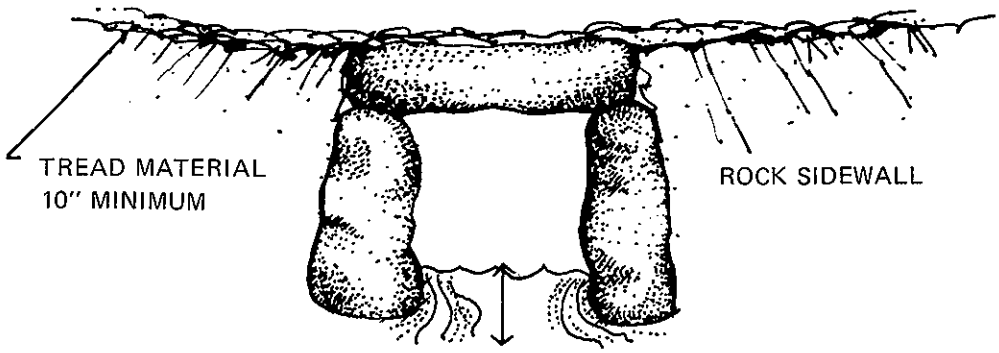

ELEVATION

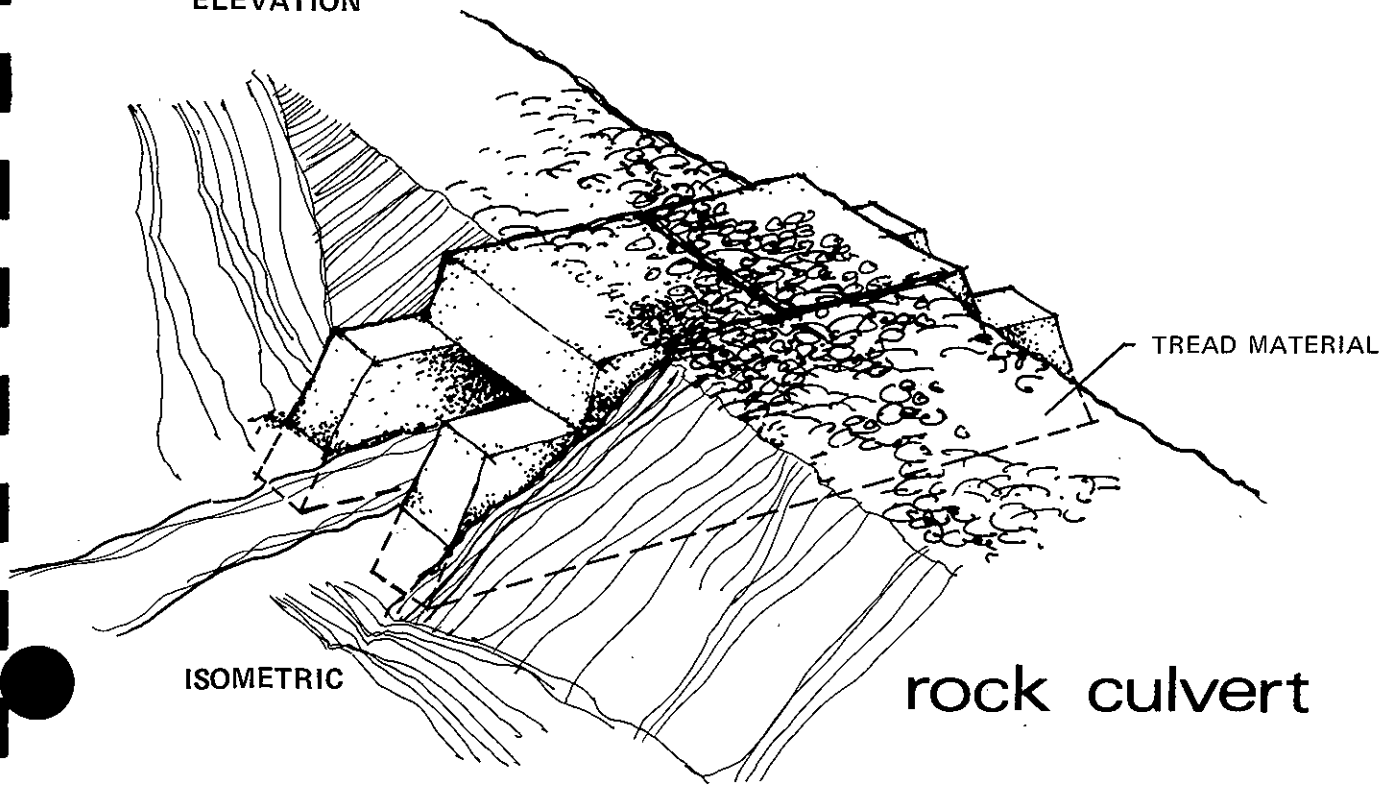

ISOMETRIC

rock culvert

Rock Drains

Rock, or French, drains consist of a systematically placed row of rocks graduated in size (largest on bottom) in a boggy or springlike water source, usually below the surface. This structure, in effect, collects the water in the trail area and transmits it under the trail base, normally permitting a dry trail surface. If an adequate volume and graduated size of rocks is available within a reasonable distance of the planned trail, rock drains are a cheap and effective way to drain small wet areas of a trail. The drain should be on a gradient to be effective (2 percent minimum, more if drained area will permit).

CRITERIA FOR FORDS AND BRIDGES

Fords

Fords normally represent natural sites where convenient crossings may be made. Some improvement of the stream channel may be required to provide good footing. Often fords are necessary in conjunction with a foot bridge for pack and saddlehorse use (see Foot Bridge illustration). Fords should not be located where the water flow is swift or if water depth exceeds 2 feet during the normal season of use. Safety of the user is a major concern in determining whether to use a ford or a bridge.

In fast-moving streams, the tread across a ford can often be improved by moving the larger rocks into a line across the stream parallel with the trail and below the downstream edge of the crossing. This technique allows sand and gravel to deposit above the barrier and develop a smooth level tread. In all streams, larger rocks should be moved out of the way to improve footing for horses.

Bridges

Some form of bridge construction is required on most trails to provide safe and convenient passage over and across areas where earthen trail tread construction is impractical. Safety of the user is the prime consideration in any bridge design.

The basic difference between a horse and foot bridge is the load-carrying ability and width of the structure.

In designing a bridge, its height above the stream should be determined by the passage of water, ice, and debris. Only bridges built with an adequate opening to accommodate each year's floodwaters will survive. Occasionally, cribs can be avoided if a high bank, large rock, or ledge happens to be in the correct location. Most sites require two cribs, one on each side of the stream.

The location of the bridge should probably determine the type of material to be used--wood, aluminum, concrete, or steel. In some heavily used areas, a weathering steel (cor-ten) is being used to replace wooden

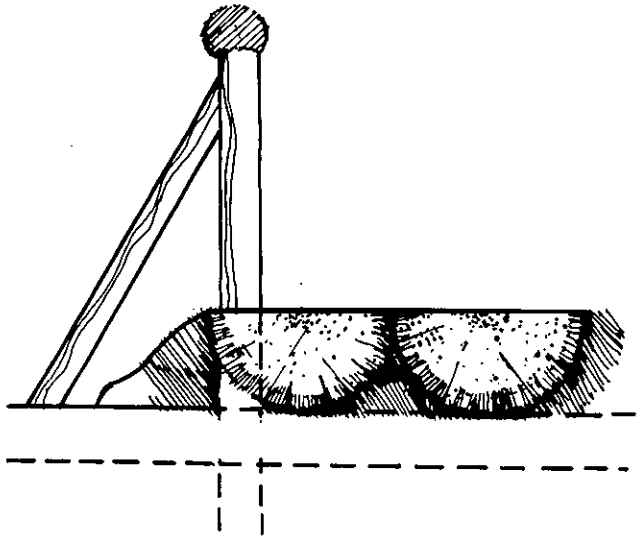

DETAIL

BED ENDS ON ROCK OR
LOG ABUTMENT

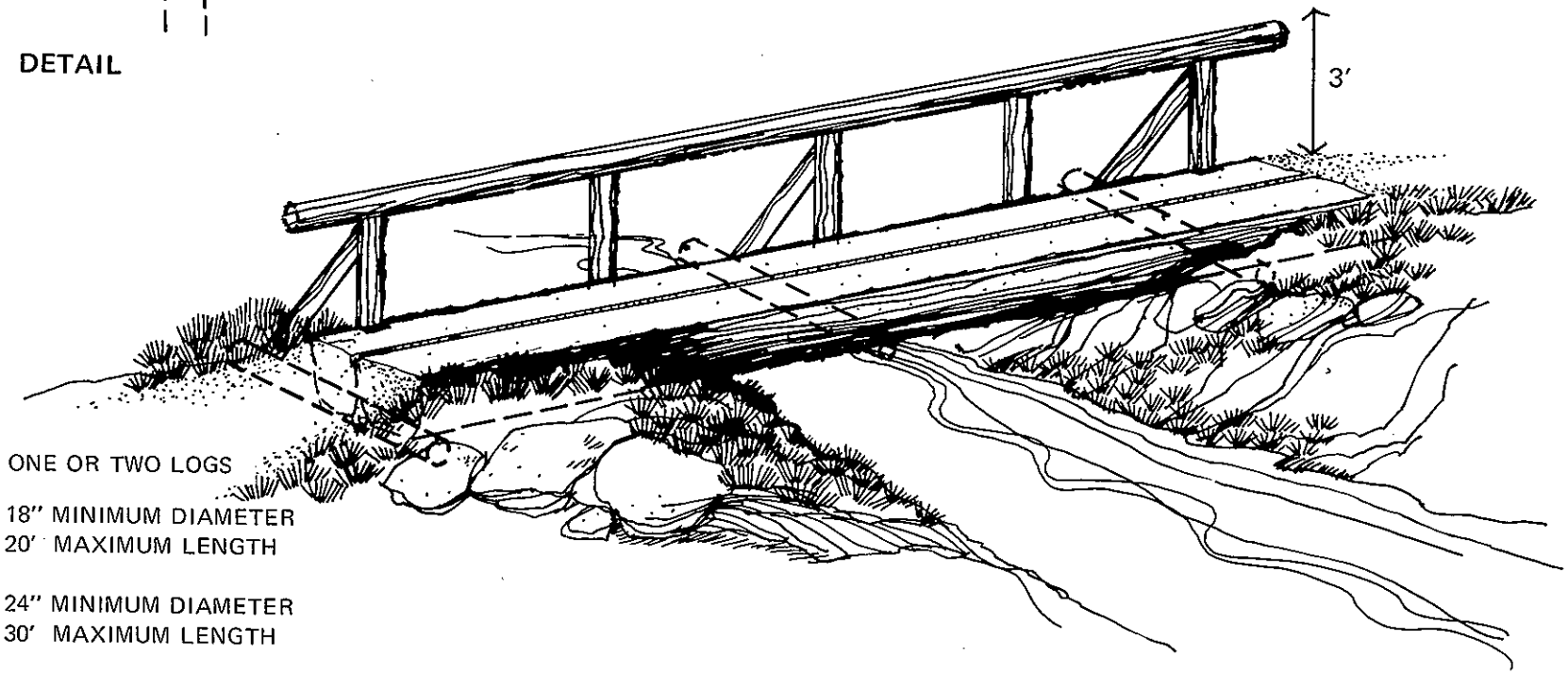

ONE OR TWO LOGS

18″ MINIMUM DIAMETER
20′ MAXIMUM LENGTH

24″ MINIMUM DIAMETER
30′ MAXIMUM LENGTH

footbridge

structures. This type of steel gives a rustic appearance and is virtually maintenance-free and vandal-proof.

In building a wooden bridge, high standard workmanship in the selection, fabrication, and fitting of logs could mean the difference between an unsafe or short-lived and a long-lived bridge. If possible, the logs should be cut a year in advance. In order to reduce cracks or splits, the logs should be seasoned with the bark on them and peeled immediately before use. During the seasoning period, the logs should be set on blocks to keep them from contact with the ground. Adequate equipment should be on hand for moving and handling the logs. No misfit joints or uneven bearing surfaces should be allowed; these factors could detract materially from the life of a bridge.

When repairing or replacing a bridge, the job is not completed until the replaced or unused material is properly disposed of. Left over material at the site can remain an eyesore to backcountry users for years to come. Any replaced or unused material should be hauled to a wooded area and allowed to return to the ecosystem. Material that will not decompose (nails, spikes, wire) should be removed and hauled away.

OVERNIGHT TRAIL FACILITIES

Campsites, huts, or shelters are needed on long-distance trails and should be considered in the trail design. Sites for overnight facilities must be carefully selected to withstand impacts from trail users. Use should be diverted from heavily eroded, delicate, or impacted sites. Visitors should be directed to overnight sites by maps, guidebooks, and signs.

In selecting a site for campsites, shelters, and huts, the following should be considered:

Overnight facilities should be located no more than one day's hike apart and away from major trailheads.

They should be located at least 1 mile from public roads to reduce vandalism and other unauthorized use.

Level ground and soils able to withstand impacts with little erosion potential are the best choice for campsites, shelters, or huts.

Attractive vegetation or topographic features that provide partial shade and shelter from high winds should be considered in site selection.

Overnight facilities should be located at least 200 yards from main trails.

An adequate water supply should be provided if possible. Methods to purify the water should be posted.

Pit toilets should be provided where waste can be handled by aerobic compost methods or by relocating the waste to a nearby site. Toilets should be located at least 100 feet downwind of facilities and 100 feet from any stream.

The carrying capacity of a site should generally be considered. A maximum of ten persons per site is recommended.

Small fireplaces should be provided at frequently used sites.

Facilities should not be located on lake shorelines, or near rock cliffs that present high safety risks or potential damage to the site.

Facilities must not be located in areas subject to unexpected flash flooding, rockfall, lightning, or other environmental hazards.

MAINTENANCE GUIDELINES

Maintenance begins immediately following trail construction and continues until such time as the trail has been obliterated. The objectives of trail maintenance are to provide for user safety, user access, and convenience; to protect adjacent resources; and to preserve trail investment. Based on the objectives, the priorities for performing maintenance work are as follows:

Unsafe conditions should be corrected, or the use that normally would be permitted on a trail must be restricted. Safety conditions are always a first priority.

Resource and trail damage should be prevented.

The intended convenience and comfort of the trail user should be considered.

Determent of maintenance activity to a later fiscal year would allow little resource or trail damage.

MAINTENANCE PROCESS

To ensure that the maintenance objectives are met, a systematic maintenance process should be followed. This process has been developed to provide guidelines for effective maintenance planning, scheduling, performance, and evaluation.

Each area in the National Park System has a trail inventory, which consists of a park trail data inventory and a trail maintenance and development program inventory (see trail inventory in the "Trails and Walks" binder). The trail inventory lists general statistics such as the number of shelters provided, the annual number of trail users, the current budget, the number of campers, and other general information. The trail inventory gives an overview of a park's entire trail system.

Steps in the maintenance process are as follows:

A trail log should be prepared for each trail (or segment) in a park.

Condition/corrective surveys should be performed on each trail (or segment), usually annually, according to the trail's priority.

An annual trail maintenance plan should be prepared, again by priority, using trail needs noted in the condition/corrective surveys.

Continuous updating of the trail inventory is a most important function of this process. Information in the trail log and the surveys can be used for this purpose.

Trail Log

The trail log is a separate inventory system. The log consists of a complete inventory of physical features within or adjacent to a trail (see Trail Log example). Typical inventoried data in a trail log should include such features as the following:

type of terrain	retaining wall	intersection	fence
ground cover	puncheon section	bridge	sign
% of side slope	turnpike section	drainage dip	cairn
trail tread width	rock section	water bar	gate
grade	drainage ditch	culvert	vista
surfacing and depth	stone barrier	stream ford	stile
switchback	barricade	underdrain	shelter
climbing turn	turnout	steps	special features

The trail log is normally prepared only once in the life of a trail; however, changes in trail location, addition or deletion of trail structures, combining with adjacent trails, or abandonment of various sections of a trail would require updating the trail log.

The log should be prepared in sufficient detail to allow for appropriate trail maintenance decisions. Using a measuring wheel (cyclometer), trail features should be located and described to the nearest foot (if needed) in the trail log. Measurements should commence at the beginning terminus of a trail. The trail log should be kept as part of an individual trail file.

An accurate and well-prepared trail log will pay dividends many times the original cost of gathering data. This inventory is imperative to trail maintenance planning. Without the log, an effective or efficient trail maintenance system cannot exist.

In addition to inventorying the physical features of a trail, the maintenance level (1 through 5) and the type of trail being inventoried (major, minor, wilderness) should be determined and recorded as part of the trail log.

Maintenance Levels. The maintenance level assigned to a trail depends on land management objectives, purpose of the trail, volume and type of traffic, existing trail standards, and fund availability. The maintenance level is used to define and predict the type, amount, and frequency of maintenance work required to ensure continued service of the resource to the extent required for the allowed use.

Each trail (or segment) should be assigned one of the following maintenance levels:

> Level 1--Level 1 trails are maintained for high use. These trails are the major trails in a park, usually reaching visitor facilities and other primary points of interest. Traffic is heavy. The tread is

TRAIL LOG AND CONDITION/CORRECTION SURVEY

Park ROMO Trail Name and No. Glacier Creek #25

Dist. F/Range Length 6.5 Mi. Page 1 of 5

Maint. Level: 3 Type of Trail: B

Logged by: A. Hagood | Surveyed by: P. Swaringen

Date: 8/13/82 | Date 10/18/82

Sta.	Feature	Condition/Correction	M.H./Equip.
0.00	Trailhead sign: Distance to overlook	Sign needs painting	
0.76	Water bar	Replace log	
1.67	Rock wall	Rebuild top Large rock available	Jackhammer
3.41	12" CMP culvert	Clean inlet & outlet	
4.68	Drainage dip	Clean before season	

maintained at the highest standards. This level also includes bicycle and handicapped trails. Level 1 trails require maximum maintenance.

Level 2--These trails are maintained for concentrated use, at relatively high standards. Traffic is medium to heavy. The tread is maintained at a high standard for convenience and comfort. Level 2 trails require high maintenance.

Level 3--Level 3 trails are maintained for intermediate use. Traffic is medium. Tread is maintained for user convenience. These trails are designed for any permitted mode of travel. Level 3 trails require a medium amount of maintenance.

Level 4--These trails are maintained for semiprimitive use. Traffic is low to medium. The tread is often not smooth, having a dirt and rock surface. Level 4 trails are maintained for either pedestrian or horse use. Less maintenance is required for level 4 trails than the preceeding levels.

Level 5--Level 5 trails are maintained for primitive use. Traffic is low. These foot trails require custodial care. Minimal maintenance is required.

Types of Trails. Each trail (or segment) should also be designated according to the following types:

Type A - Major Trails--Major trails are marked routes that are improved and maintained for foot and horseback traffic. A major trail in a park usually reaches many of the main visitor attractions and serves as a terminus for minor or wilderness trails. These highly developed trails contain the necessary bridges, corduroy elements, drainages, and shelters where needed. Minimum tread width is usually 24 inches, and overall grade is less than 10 percent. For grade distances less than 150 feet, grade should not exceed 15 percent. Type A trails are to have first priority for maintenance.

Type B - Minor Trails--Minor trails are also marked, improved, and maintained to accommodate foot and horseback traffic but contain an overall lower construction standard than type A trails. These trails serve special scenic areas, fishing areas, and access points. The tread does not have to meet the maximum standard and may be limited to the space required to form a single-file trail except on grades where the maximum is justified. The overall grade is less than 15 percent. For distances less than 150 feet, grade should not exceed 18 percent.

Type C - Wilderness Trails--Wilderness trails are marked but are generally unimproved except for clearing and some work on dangerous areas. These trails are normally used by experienced wilderness trail users, for access to backcountry campsites and cross-country areas, for certain routes for mountain climbers, and for fire suppression and administrative purposes. Minimum tread width is 18 inches, with an overall grade less than 15 percent. For

distances less than 150 feet, grade should not exceed 20 percent. Type C trails have the lowest maintenance priority except where safety is concerned.

Type D - Walks--Walks include sidewalks, boardwalks, gravel, oyster shell, marl, and bituminous trails that interconnect developed areas, or serve as short scenic walks, and interpretive trails. These walks are normally for foot and wheelchair travel and are usually built to high standards. Walks are not further discussed in this handbook (see "Special Trails Handbook").

Type E - Other--Other trails include snowmobile, water, ski (cross-country), bicycle, motorbike, and underground (cave) trails. These trails are not further discussed in this handbook (see "Special Trails Handbook").

After the physical features of a trail have been inventoried and a maintenance level and the type of trail have been designated, the condition/corrective surveys should be prepared. These surveys are vital to the maintenance process. Without them, trail maintenance decisions would be based on assumed data and guesswork.

Condition/Corrective Surveys

The trail log should be used as a working tool for the condition survey. Often the initial condition survey is performed at the same time the log is prepared. A condition survey identifies. and documents the physical conditions of a trail including all structures and facilities and lists the deficiencies that will require maintenance efforts (see Trail Log and Condition Survey example).

Trails in a heavy use category require condition surveys annually or more often, whereas those that receive less use may only require infrequent inspections. When identifying trail deficiencies, the maintenance objectives, maintenance levels, and operational status should be considered.

Generally performed at the same time as the condition survey, the corrective survey documents the maintenance activities required to remedy the deficiencies identified in the condition survey. This basic information, coupled with maintenance activity specifications, yields manpower, equipment, material costs, and scheduling data for maintenance work.

Maintenance Activities

The following checklist groups general maintenance activities under broad trail maintenance areas. Some of the more common maintenance activities that could be required to remedy the deficiencies documented in the corrective survey are as follows:

Trail Maintenance-Vegetation

Brushing clearing areas
Logging out
Hazard tree removal
Litter cleanup
Slope revegetation
Backslope grooming
Vista maintenance

Tread Maintenance

Grading tread
- slough and slide removal
- slump repair
- grubbing rocks, roots, stumps

Spot surfacing
Turnpike section repair
Surface replacement (similar material)
Surface repair and removing loose rocks

Drainage Maintenance

Cleaning and repairing structures
- culverts
- underdrains
- water bars
- grade dips
- drainage ditches

Replacement of existing drainage structures
- culverts
- underdrains

Installing additional drainage structures
- water bars
- culverts
- rock drains
- water bars
- grade dips
- drainage ditches

Structure Maintenance

Bridge repair
Cribbing and retaining wall repair
Barrier and guardrail repair
Steps and terrace repair
Fence, gate, stile repair
Shelter repair

Sign Maintenance

Sign repair and rehabilitation
Sign replacement
Blaze and trailblazer repair and replacement
Cairn repair
Barricade or closure device repair

In order to provide more details of the maintenance activities, the following guidelines are presented under each broad category.

Trail Maintenance-Vegetation. All side branches extending into the trail corridor should be cut flush with the parent branch or stem, leaving no stubs and allowing for natural healing to take place. Paint should not be used for tree wounds (see the "Clearing Requirements" section for an exception to this statement).

Trees and brush outside the tread should be cut as close to the ground as possible, leaving no sharp-pointed stumps or stems. Stumps should be treated with herbicides (after approval of a pesticide control coordinator) to prevent regrowth and sprouting. Herbicides should be used only for stump treatment on trails. Strict adherence to the manufacturer's directions is required.

Brushing in open grassy areas, around longleaf pine trees, or around similar timber types having sparse underbrush may be accomplished by using power mowers except where prohibited, such as in wilderness areas.

Small trees and shrubs within the tread should be grubbed out to prevent tripping, and holes should be filled and compacted.

Any fallen tree lying on or over a trail should be removed, or if a large tree, the portion lying across the trail. When cutting a log, the cuts should be made at a sufficient angle to permit the cut section to be rolled free with minimum effort. Generally, the uphill cut should be made first to permit the lower section to hold the upper portion from sliding onto the trail and possibly injuring the workers whose footing is unstable for the upper cut. If possible, the entire windfall or the portion below the uphill cut should be rolled below the trail (see Travelway Clearing illustration).

In order to remove hazardous trees in high use and backcountry camping areas, all dead or dying trees that have a possibility of falling across the camping area or trail must be removed. In wilderness areas, only those trees that are a serious hazard to users should be removed. The debris should be disposed of away from the trail and out of sight where practical.

Weeds and light new growth may be left along trails because they soon disappear. Debris from clearing and pruning should be disposed of by chipping or removed from the trail corridor. Debris should be considered for control of traffic or erosion. Slash should be scattered on the downhill side of a trail.

Tread Maintenance. When tread repair is needed, it should be restored to the original design condition, free of rolling stones, rock points, stumps, and shrub roots. Attention should be given to dips and outsloping. High standard treads should be smooth and firm. Paved treads may require patching or sweeping.

Drainage Maintenance. No factor in trail maintenance is more important than proper drainage. Many sections of trail are damaged or destroyed by erosion that proper drainage could have prevented. Trails should be routinely inspected to ensure that all culverts, waterways, and dips are clear of debris and ready to function properly at all times, especially during the rainy season or spring runoff. Drainage structures constitute the largest simple capital outlay item, and proper and careful maintenance is both necessary and rewarding in labor, material, money saved, and in the number of days the trail may be kept useable by the public. If repairs are necessary, they should always be performed to their standard construction specifications.

Structure Maintenance. Bridges and dams should be inspected annually. Minor maintenance of structures should be accomplished by a trail crew. Deficiencies requiring major efforts should be planned as a separate project.

The major consideration in structure maintenance is safety. Unsafe structures must not be allowed to remain unattended. If work must be deferred, alternative trail routes should be provided to temporarily bypass the hazard.

Sign Maintenance. Sign maintenance is extremely critical to the operation of a successful trail system. A sign plan should be the basic source of information used for sign location and wording. Priorities for sign maintenance are as follows:

signs required for user safety
user restrictions and advisory signs
guide signs
informative and interpretive signs

All signs damaged or weathered so that they no longer serve the intended purpose should be repaired or replaced in accordance with trail standards. Periodic painting of signs in most parks is a necessity.

Annual Maintenance Plan

After the trail log and the condition/corrective surveys have been completed and the trail inventory updated, a chief of maintenance should use the information from these sources to produce an annual maintenance plan. Because the National Park Service is faced with the problem of apportioning a limited amount of manpower, finances, and time, it is imperative to effectively plan and schedule the maintenance work in order to optimize limited resources for the most cost-effective results.

The annual plan should define and schedule required maintenance activities, manpower, equipment, material, and cost for the fiscal year. This final determination is derived by integrating (1) the trail inventory and trail log (what and how much is out there), (2) the condition survey (present physical condition of the trail facility), (3) the corrective survey (maintenance activity needed to correct deficit facilities), and (4) the estimated unit costs for accomplishing the maintenance work.

A good maintenance plan will provide positive support for budget requests. The plan should also assist the chief of maintenance to evaluate performance against maintenance work standards. The plan should also be used to identify more efficient maintenance methods and to update costs and base data.

When preparing the annual maintenance plan, long-range goals for maintenance, reconstruction, and construction over a five- to ten-year period should be considered. Without these long-range goals, the annual plan would tend to lack consistency and direction, becoming a reaction response to immediate problems without regard to long-term priorities. Long-range goals are absolutely essential to efficient utilization of cyclic maintenance and construction funds and the use of volunteer groups on any appreciable scale. The long-range goals should be realistic, embracing not only what needs to be done but also the probable means of accomplishment.

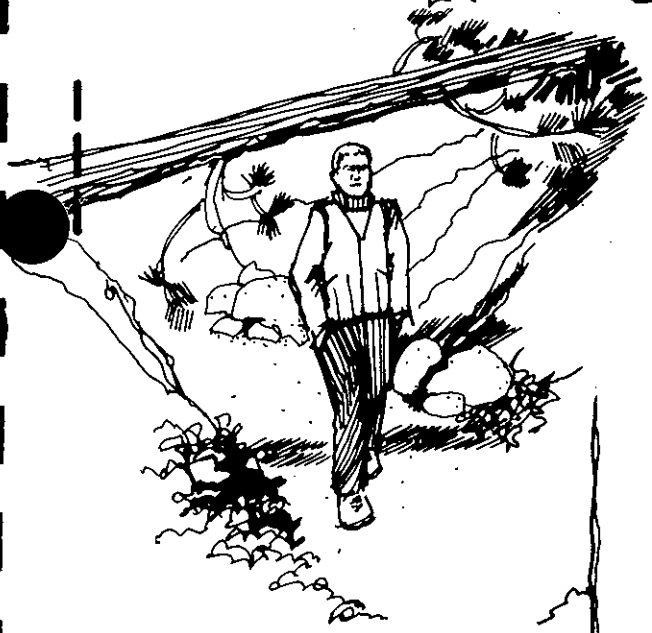

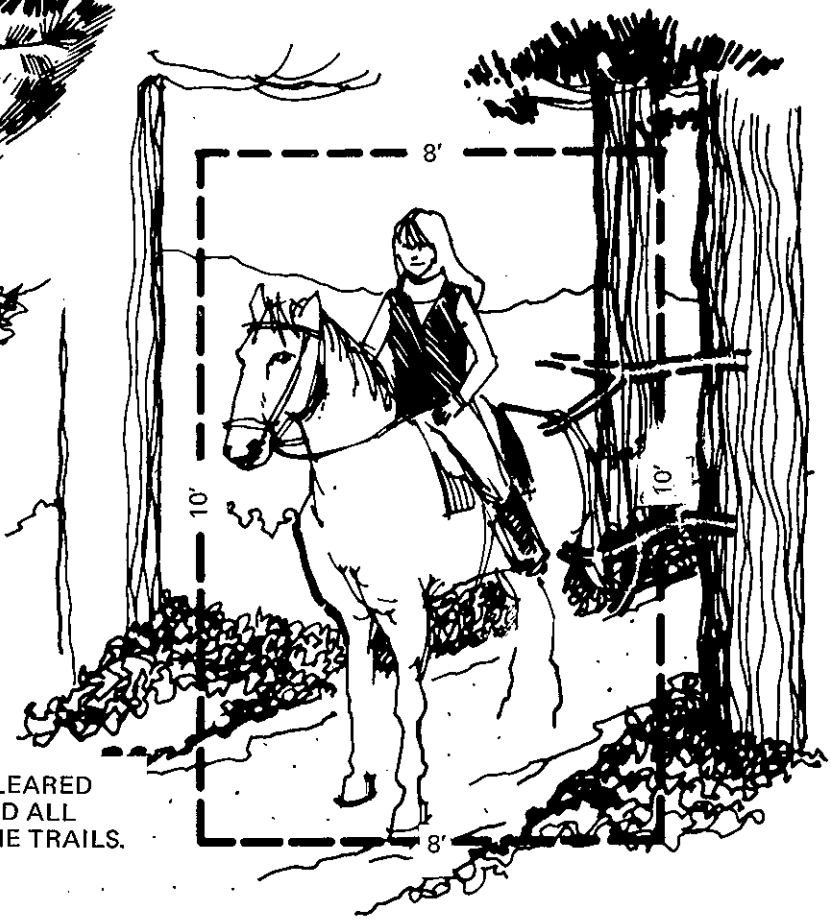

HIKING TRAILS SHOULD BE CLEARED OF DOWNED LOGS, DEBRIS AND ALL PROJECTING LIMBS WITHIN THE TRAILS.

travelway clearing

COST ESTIMATING

Providing reliable cost data for maintaining trails is essential for planning work on existing and future trails. Park managers have the responsibility of determining the amount of money needed to maintain a satisfactory trail system within the park they manage.

Cost of trail maintenance varies greatly depending on type of trail, usage, remoteness, location, difficulty of terrain, and many other factors. Usually the minimal cost for maintenance of a foot trail is about $400 per mile per year. Depending upon the type of trail and maintenance needed, this cost can exceed $5,000 per mile.

GLOSSARY

ABUTMENT	The foundation of either extreme end of a bridge that supports the superstructure (sills, stringers, trusses, or decks).
BACKSLOPE	The cut bank formed by the excavation extending upward from the tread.
BASE	The primary excavated bed of a trail upon which the tread, or finished, surface lies.
BERM	The ridge of dirt or rocks placed on the outside of the trail base.
BRIDGE	Any structure spanning and permitting passage over a river, stream, chasm, canyon, or road.
CAIRN	A constructed mound of rock located adjacent to a trail. Used in open alpine areas or mountain areas where the tread is indistinct.
CLINOMETER	Instrument used for measuring angles of elevation or inclination.
CORDUROY PUNCHEON	A log structure laid on the ground for the purpose of crossing swampy areas. Usually consists of stringers, decking, and often a soil or loose gravel tread on top of decking.
DECK OR FLOORING	That part of a bridge structure that provides direct support for trail traffic.
DRAINAGE, CROSS	Running water in swamps, springs, creeks, drainages, or draws that the trail must cross.
DRAINAGE, SURFACE	Rain or snow runoff from the surface of the tread.
DUFF	Organic matter or a deep mat of tree needles or leaves in various stages of decomposition on the ground of a forest.
FORD	A natural stream crossing improved sufficiently for use by saddle or pack animals and trail users.
GRADE DIP	A reverse in the grade of the trail accompanied by an angling outslope that will divert water off the trail.

GRADE, MAXIMUM	The steepest grade permitted on any part of a trail.
GRUBBING	To dig, to clear of roots, to uproot shallow roots near or on the ground surface; also grubbing of tree stumps..
HEADER	A long, uniform stone laid with its end towards the face of a retaining wall or crib used intermittently to structurally tie in the other rocks laid in the wall.
MEASURING WHEEL, OR CYCLOMETER	An instrument that measures circular arcs. A device that records the revolutions of a wheel and hence the distance travelled by a wheel on a trail or land surface.
OUTSLOPING	A method of base grading that leaves the outside edge of the trail lower than the inside.
PUNCHEON	See Corduroy.
RUN PLANK	Usually wood planks laid lengthwise (along the axis) on top of bridge decking used as the tread surface.
SIDESLOPE	The natural slope of the ground measured at right angles to the centerline of the trail, or the adjacent slope which is created after excavating a sloping ground surface for a trailway, often termed a cut-and-fill-slope, left and right of the trail base and tread.
SILL	A crosswise member at the top of an abutment or pier that supports the stringers, beams, or trusses.
SKEW	Deviation from a straight line; slant.
SPECIFICATIONS	The standard of workmanship and type of materials for all component parts of a trail base, trail tread, clearing, grade, bridge, culvert, puncheon.
STAKES, GRADE AND SLOPE	Stakes set by the trail locator to establish the elevation and cross section of the completed tread.
STAKES, LINE	Stakes set by the trail locator to establish the centerline of the trail.
STATION	One hundred feet measured along the centerline of the trail.
STILE	A step or set of steps for passing over a fence or wall.

STRINGER	The lengthwise member of a structure that supports the bridge deck.
SWITCHBACK	A sharp short radius curve in a trail that is used on hillsides to reverse the direction of travel and to gain elevation.
TRAILHEAD	The start or end of a trail often accompanied by various public facilities, such as a horse unloading dock or chute, parking areas, toilets, water, directional and information signs, and a trail use register. A picnic or campground may also be a part of the trailhead facility.
TREAD	The surface portion of a trail excluding backslope, ditch, and shoulder. The tread surfaces could include native material or gravel surface crushed to size. Another tread surface could be soil cement, which is a combination of local trailbed soil mixed with a cement to form a hardened soil cement trail tread. Asphalt is a various combination of asphalt mixes with a controlled blend of small crushed gravel or screened pit run gravel to provide a hard surfaced trail tread.
WATER BAR	A device for turning water off the trail, usually made of logs, stones, soil cement, or by contouring the native material within the trail prism. An enlarged modification of a dip installed at an angle across the trail base, with approximately a 30-degree skew.

BIBLIOGRAPHY

BIRCHARD, WILLIAM, JR., AND PROUDMAN, ROBERT D.
1981 Trail Design, Construction, and Maintenance. 2nd ed. Harpers Ferry, West Virginia: Appalachian Trail Conference.

1982 Appalachian Trail Fieldbook: A Self-Help Guide For Trail Maintainers. Harpers Ferry, West Virginia: Appalachian Trail Conference.

COLORADO DIVISION OF GAME, FISH AND PARKS
n.d. Trails For All The People, by Robert L. Thayer, Jr. Denver, Colorado.

COLORADO MOUNTAIN TRAILS FOUNDATION
n.d. Mountain Trail Volunteers: A Guide To Working Safely. Littleton, Colorado.

NEW ZEALAND WALKWAY COMMISSION
1979 A Guide To Walkway Construction and Maintenance. Wellington, New Zealand: Department of Lands and Survey.

OLSON, JANE, AND HANSON, HOM
1976 A Trail Manual. Oakland, California: East Bay Regional Park District.

PARKS CANADA
1975 Sign Manual. Ottawa, Canada.

1978 Trail Manual. Ottawa, Canada.

PROUDMAN, ROBERT D.
1977 AMC Field Guide to Trail Building and Maintenance. Boston: Appalachian Mountain Club.

UNITED STATES DEPARTMENT OF AGRICULTURE, FOREST SERVICE
n.d. Trails Handbook. Washington, D.C.: U.S. Government Printing Office.

n.d. Guide For Mountain Trail Development. Denver, Colorado: Rocky Mountain Region.

n.d. "Trails South." Atlanta, Georgia: Southern Region.

VIRGINIA STATE PARKS
n.d. Construction and Maintenance of Trails. Richmond, Virginia: Division of State Parks.

VOGEL, CHARLES
1968 Trail Manual. San Mateo, California.

NOTES:

NOTES:

NOTES:

☆ U.S. GOVERNMENT PRINTING OFFICE: 1983—676-031/59 REGION No. 8

As the nation's principal conservation agency, the Department of the Interior has basic responsibilities to protect and conserve our land and water, energy and minerals, fish and wildlife, parks and recreation areas, and to ensure the wise use of all these resources. The department also has major responsibility for American Indian reservation communities and for people who live in island territories under U.S. administration.

Publication services were provided by the editorial and graphics staffs of the Denver Service Center. NPS 2023