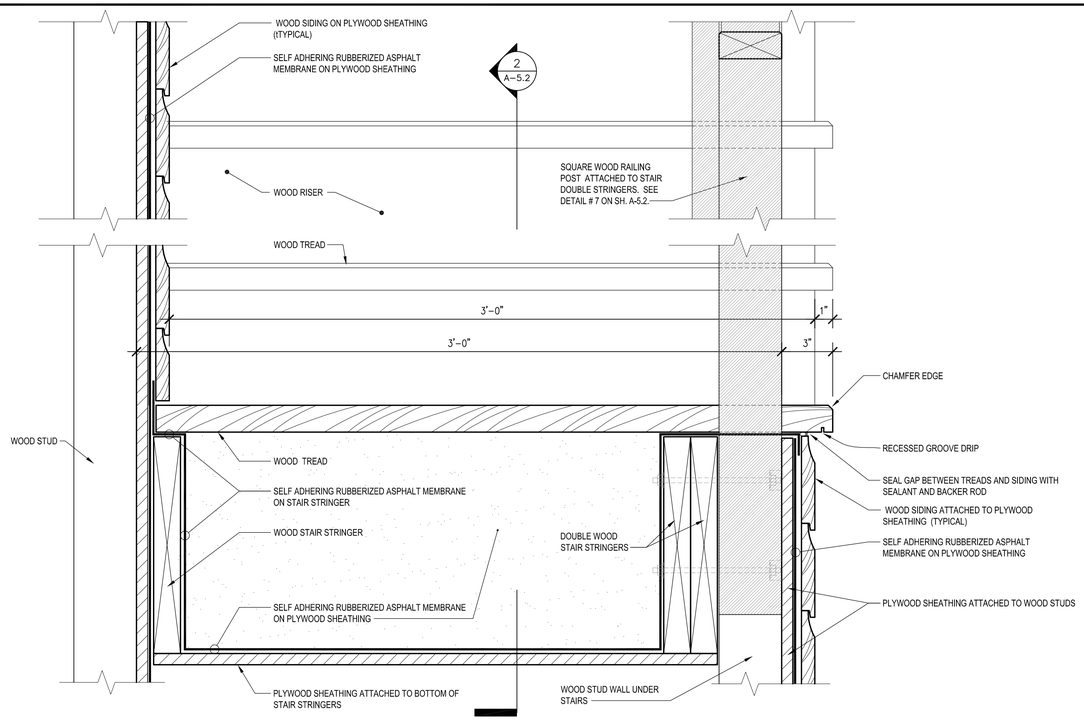

6 STAIR CROSS SECTION DETAIL
SCALE: 3" = 1'-0"

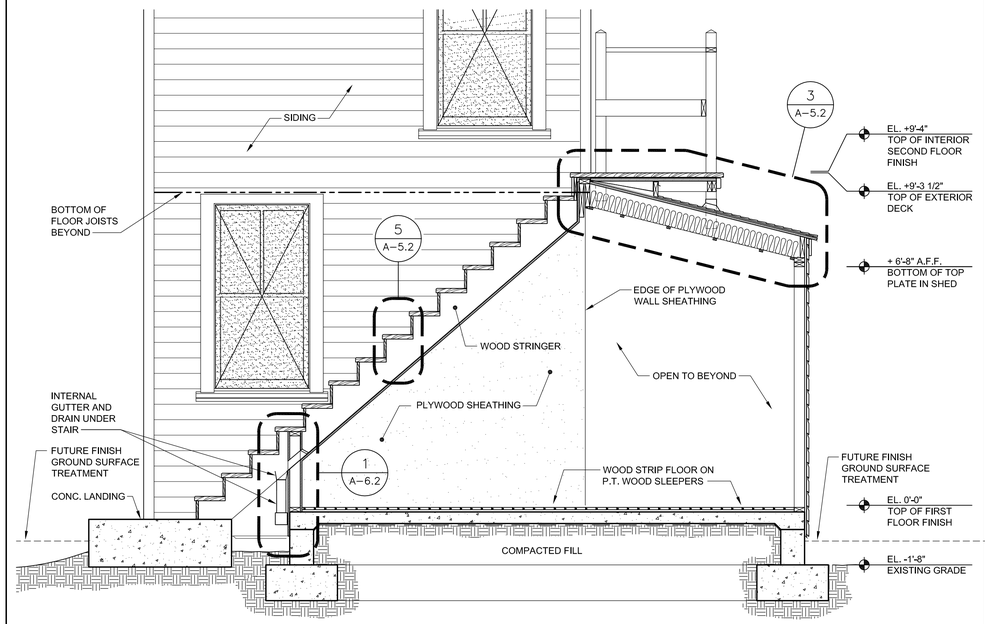

2 STAIR SECTION
SCALE: 1/2" = 1'-0"

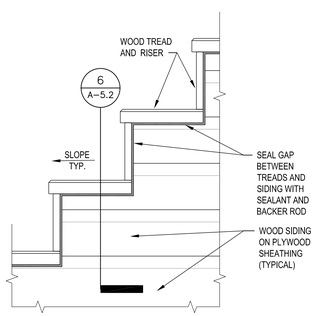

8 STAIR ELEVATION
SCALE: 1-1/2" = 1'-0"

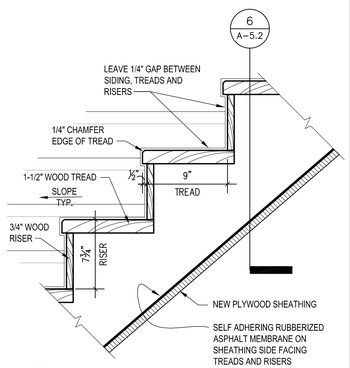

5 STAIR DETAIL
SCALE: 1-1/2" = 1'-0"

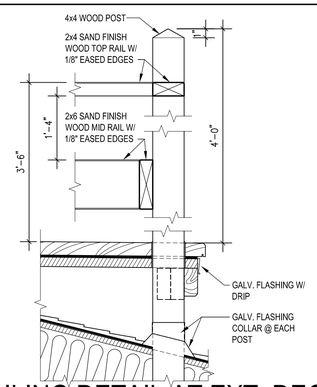

4 RAILING DETAIL AT EXT. DECK
SCALE: 1-1/2" = 1'-0"

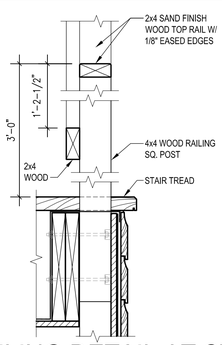

7 RAILING DETAIL AT STAIR
SCALE: 1-1/2" = 1'-0"

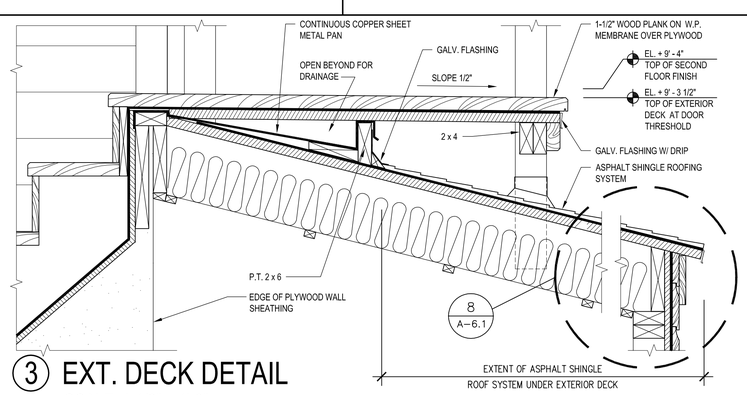

3 EXT. DECK DETAIL
SCALE: 1-1/2" = 1'-0"

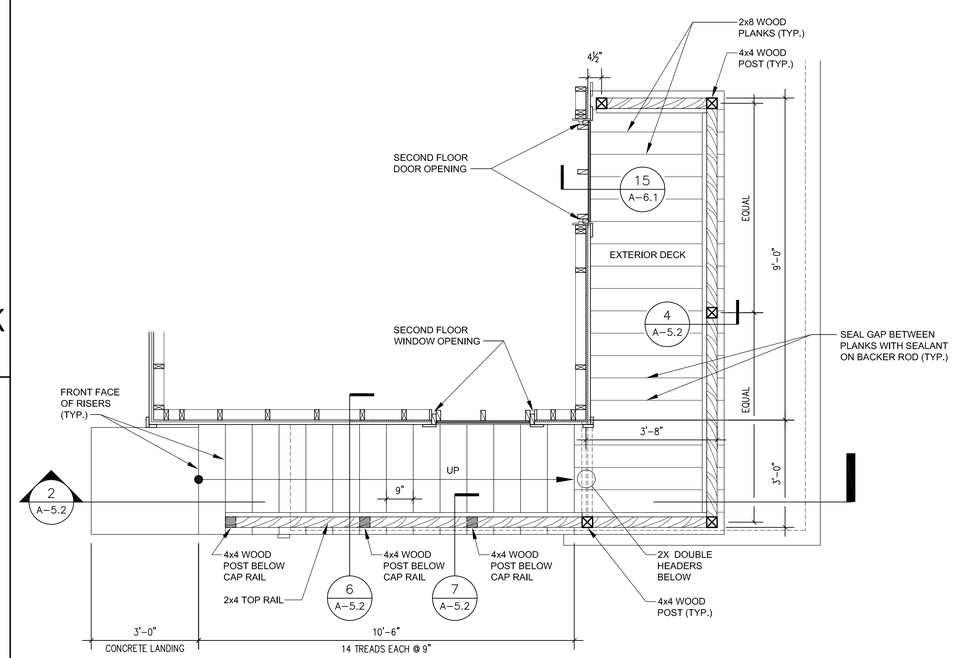

1 STAIR PLAN
SCALE: 1/2" = 1'-0"

N

BIG CYPRESS NATIONAL PRESERVE

HISTORIC MONROE STATION STABILIZATION
at
BIG CYPRESS NATIONAL PRESERVE
BICY Contract No. C5120085452

SIXTO ARCHITECT INC.
ARCHITECTURE PLANNING INTERIORS
CONSTRUCTION CONSULTING
AA 0003591
1501 Venera Ave. Suite 320-A
Coral Gables, Florida
Tel: (305) 569-2993 Fax: (305) 305-569-9701
www.sixtoarch.com

DOUGLAS WOOD & ASSOCIATES
STRUCTURAL ENGINEERS
299 ALHAMBRA CIRCLE
Suite 510
CORAL GABLES
FLORIDA 33134
PH. 305 461-3450
FAX 305 461-3650
EB 6353
inbox@douglaswood.biz
www.douglaswood.biz

THE DESIGN REPRESENTED BY THIS DRAWING ARE OWNED BY AND ARE THE PROPERTY OF SIXTO ARCHITECT, INC. NO COPIES, TRANSMISSIONS, REPRODUCTIONS OR ELECTRONIC MANIPULATION OF ANY PORTION OF THESE DRAWINGS IN WHOLE OR IN PART ARE TO BE MADE WITHOUT EXPRESS WRITTEN PERMISSION OF SIXTO ARCHITECT, INC.

PROJECT NO:

ISSUE DATE	PHASE
JUNE 12, 2009	CD

REVISIONS

PROFESSIONAL OF RECORD: RAFAEL SIXTO, A.I.A.
DISCIPLINE: ARCHITECTURE
REGISTRATION NO: AR 11543

SEAL:

SHEET TITLE:

STAIR PLAN, STAIR SECTION, STAIR DETAILS

DRAWING NO:

A-5.2

File Location and Name: