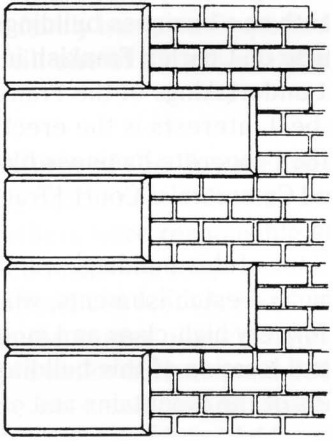

Quoins

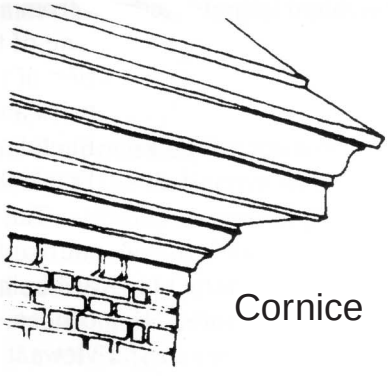

Cornice

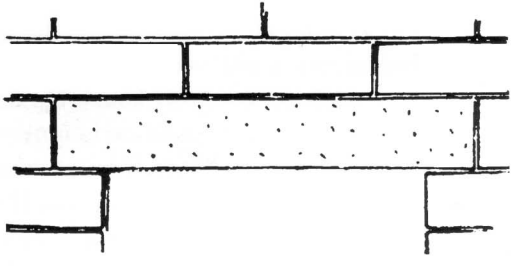

Lintel

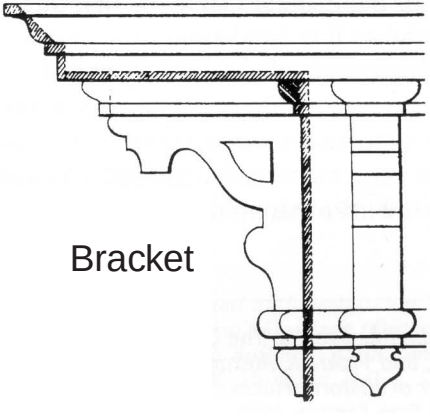

Bracket