Harpers Ferry Center
Center for Media Services
National Park Service
U.S. Department of the Interior

Programmatic Accessibility Guidelines for National Park Service Interpretive Media

Version 2.0, August 2009
Prepared by the Harpers Ferry Center
Accessibility Committee

Table of Contents

Chapter

1 About These Guidelines 4

2.0 Getting Started 6

2.1 Interpretive Planning 6

2.2 Scoping 8

2.3 Budgets 8

2.4 Evaluation 9

Guidelines by Interpretive Media Type

3 Audiovisual Programs and Tours 10

4 Conservation (Artifacts) 21

5 Exhibits 22

6 Historic Furnishings 50

7 Park Signage 51

8 Publications 54

9 Wayside Exhibits 72

10 Web-based Media 75

11 Promoting Accessibility 77

12 Training 80

Appendices

Appendix A: Laws, Regulations, and Policies 81

Appendix B: Accessibility Resources 91

Appendix C: The Principles of Universal Design 95

Appendix D: Alternative Media Formats **99**

Appendix E: NPS Accessibility Pictograph Symbols **101**

Acknowledgements **102**

Prior to the October 2007 edition of these Guidelines, this document was titled *Special Populations: Programmatic Accessibility Guidelines for Interpretive Media*. Note: Because accessibility regulations and technology continue to evolve, we will post updates and corrections on the HFC accessibility website, www.nps.gov/hfc/accessibility.

1 About These Guidelines

The *Programmatic Accessibility Guidelines for National Park Service Interpretive Media* is for media specialists, superintendents, and other National Park Service employees and contractors who develop and approve interpretive media. Publications, exhibits, audiovisual programs and tours, wayside exhibits, signage, and web-based media provide park visitors with information and context so that their experience of visiting national parks can be both safe and meaningful. Park visitors who have physical, sensory, or cognitive disabilities have legally established civil rights to receive the same information and context that NPS interpretive media products have always provided to their fellow citizens. The following is an excerpt from Section 504 of the *Rehabilitation Act of 1973*, as amended:

> No otherwise qualified handicapped individual in the United States . . . shall, solely by reason of his handicap, be excluded from the participation in, be denied the benefits of, or be subjected to discrimination under any program or activity receiving Federal financial assistance *or under any program or activity conducted by any Executive agency or by the United States Postal Service*.

Accountability is described in the following two excerpts from *NPS Director's Order #42: Accessibility for Visitors with Disabilities in National Park Service Programs and Services* (November 3, 2000):

> **Superintendents** Superintendents ensure all of their programs, facilities, and services are accessible, in conformance with applicable laws, regulations, standards, and policies. Each superintendent ensures all new programs, facilities and services are designed, constructed and delivered in compliance with accessibility requirements.
>
> **Harpers Ferry Center** The HFC is responsible for the overall management and direction of interpretive media . . . throughout the NPS. The HFC works to ensure that the highest level of accessibility that is reasonable is incorporated into all aspects of interpretive media, planning, design and construction. This includes ensuring that all new interpretive media are provided in such a way as to be accessible to and usable by all persons with a disability. It also means all existing practices and procedures are evaluated to determine the degree to which they are currently accessible to all visitors, and modifications are made to assure conformance with applicable laws and regulations.

Federal law and agency policy require the NPS to offer media accessible to a wide range of abilities. How the NPS can provide programmatic access in its interpretive efforts to communicate with people with disabilities is a challenging, complex, and confusing topic. We all need guidance about how to apply regulations, standards, and best practices servicewide.

These NPS Guidelines combine laws, policies, and best practices. They present highlights only; they are not comprehensive. "Appendix A: Laws, Regulations, and Policies" tells where to find the full text of the laws and regulations that NPS decision-makers are responsible for following.

Although we organize the guidelines by media product for ease of use, NPS employees recognize that no interpretive media product works alone. Media products are interdependent and each has inherent strengths and weaknesses. Park visitors sample and benefit from an array of interpretive media.

These Guidelines describe design and presentation solutions that are acceptable in most interpretive media situations. The Guidelines acknowledge that those who create and review interpretive media must be flexible and versatile because park resources and circumstances are so diverse. No document can prescribe solutions for every situation that arises in the National Park System.

Don Kodak
Director, Center for
Media Services
National Park Service

W. Kay Ellis
Accessibility Program
Manager
National Park Service

2.0 Getting Started

2.1 Interpretive Planning

Successful interpretive programmatic accessibility begins with parkwide comprehensive interpretive planning—so that all media can work together. Where one medium may not be accessible to all persons, other media can fill the gaps. Early recognition of, and sensitivity to, accessibility issues will result in the most successful visitor experience.

Interpretive planning develops goal-driven communications strategies to enhance visitor experiences in parks. The basic interpretive planning document is the Long-Range Interpretive Plan (LRIP). Its three parts: 1) Develop overall goals; 2) assess current conditions; and 3) recommend personal services, interpretive media and facilities, and partnership programs.

Although not design documents, LRIPs should provide overall guidance on accessibility strategies and priorities for the park. Existing conditions in the park should be assessed with respect to accessibility for diverse audiences. Recommendations shall follow accessibility guidelines and describe a strategy for providing access to essential services, information, and experiences to diverse audiences with different abilities.

Interpretive Planning Guidelines

In interpretive planning documents or those documents that include interpretation or interpretive media, accessibility must be included as part of the plan and not just as "boiler plate" that states that the NPS will comply with all applicable laws and regulations.

NPS 2006 Management Policies directs that designs for park facilities "… will also be subject throughout all phases of design and construction to the same code compliance; the same high standards of sustainable design, universal design, and functionality; and the same review and approval processes." and that they will "... incorporate universal design principles to provide for accessibility for all people, including those with disabilities. . . ." (See "Appendix C: The Principles of Universal Design.")

In the earliest stage of any project, all planning shall be guided by Universal Design principles. Most important is Principle One: Equitable

Use, where the same experience can be provided for all users, without segregating or stigmatizing others with special accommodations or the need to ask for the special accommodations. Certain basic assumptions shall be made in the planning process:

- The facility shall be fully accessible to people in wheelchairs.

- Installing interpretive media in areas of buildings without wheelchair access is discouraged unless the inaccessible space is of crucial interpretive significance to the site.

  An example of a crucial interpretively significant space would be a room where a specific significant event took place, like the signing of an important treaty.

  Inaccessible upper floors should not be selected just because there is space available.

- If interpretive media like exhibits or historically furnished rooms are on a floor of a historic building not accessible by people in wheelchairs, programmatic alternatives must be developed for those visitors. (See "Appendix D: Alternative Media Formats.")

- All other accessible design standards, such as captioning, audio description, assistive listening systems, and tactile access to exhibits, shall be applied to all exhibits that are accessible to the public regardless of location.

- Captioning, audio description, and assistive listening systems shall be provided for all audiovisual elements.

- The interpretive media shall be multi-sensory for all the interpretive messages being conveyed.

- Specific accessibility guidelines and standards should be referenced in the document. LRIP documents themselves must be accessible. For information on accessible interpretive plans and reports, see "Publications Guidelines: Visual, Reports."

- During the early planning and design of interpretive media for a facility, the team needs to analyze the overall programmatic access as well as the site. Planners shall:

  Inventory existing interpretive programs that enhance accessibility to people with disabilities.

Evaluate facilities where new media might be installed. What accessibility issues need to be addressed?

Evaluate how the interpretive programs, planned interpretive media, and facilities together could make as accessible a visitor experience as possible. This document needs to provide guidance for all future planning.

Consumer involvement: Identify disability organizations and individuals with various disabilities, and include them in the project planning process.

For information on **accessible planning documents**, see "Publications. Guidelines: Visual, Reports."

2.2 Scoping

- Use *Architectural Barriers Act Accessibility Standards* (ABAAS) Chapters 1 and 2 (pages 72–140) to determine what interpretive media and facilities are needed: new, old, alterations, temporary, permanent facilities, ratios, minimum requirements, and more.

- The provisions of ABAAS Technical Chapters 3 through 10 shall apply where required by ABAAS, ABA Chapter 2 or where referenced by a requirement elsewhere in ABAAS.

  Planners need to extrapolate intent from ABAAS to exhibit design. Because so many interpretive exhibits are unique in their design or method of display, the usual methods of accommodating people with disabilities will require the design professionals to apply the standards/technical provisions for viewing height, reach ranges, and operation of any exhibit component individually. In most instances, standards are basic and usually are for physical access by an adult wheelchair user. The needs of persons with other types of disabilities need to be considered as well as the needs of children and small adults with disabilities.

2.3 Budgets

Project budgets must include accessibility needs from the beginning of planning. Retrofitting is far more expensive.

2.4 Evaluation

Harpers Ferry Center works with the National Park Service Social Science Program to gather useful knowledge about park visitors and the public. HFC's goal is to acquire a better understanding of audiences, which ultimately helps planners and designers create more effective interpretive media. Another goal is to make media evaluations and evaluation resources accessible to parks and contractors who are working on interpretive media projects throughout the National Park System. Traditionally, there are three stages during which formal visitor studies, or evaluations, are conducted.

Front-End Evaluation is conducted during the beginning of a project, when themes, story lines, and program ideas are being considered. Front-end evaluation concentrates on getting input from potential visitors by means of interviews and/or focus groups, to find out what kinds of information they need and would like to know, and how this information could be presented in a meaningful, interesting, and cost-effective way. Misconceptions about the subject matter are also revealed at this stage, often leading to specific content and presentation elements designed to counter them.

Formative Evaluation is conducted before the fabrication of interpretive media, when mock-up testing can be carried out. Formative evaluation is intended to "catch" design, content, and/or accessibility problems before they become a part of the final interpretive media, when they are often difficult and expensive to fix.

Summative/Remedial Evaluation is conducted after final media production, when the total "package" can be evaluated and final adjustments can be made. In a comprehensive evaluation program, the conduct of summative/remedial studies often reveals problems that were not, or could not be, identified during the earlier stages of development. For example, crowd-flow problems are often revealed only when the actual configuration of all the elements of the exhibition are in place. Similarly, orientation and signage problems become "obvious" at this point, and can often be corrected by relatively minor adjustments to wording and/or placement.

3 Audiovisual Programs and Tours

Audiovisual products give voice and vision to park interpretive themes. Voices from the past can speak, inaccessible peaks can be climbed, and complex processes can be revealed through this powerful medium. High-definition surround-sound theater presentations, audio and video museum elements, oral history recordings, multi-channel soundscapes, computer interactive programs, audio tours, ranger-led tours, audio and video podcasts, downloadable files, and interactive web features are all examples of the ways that the NPS combines sound with images to inform and inspire.

The NPS has adopted a policy of on-screen open captions or Subtitles for the Deaf and Hard of Hearing (SDH); audio description; and assistive listening systems. Still more work needs to be done. Comparatively few NPS theaters show videos that are audio described, for example. Some technical challenges may make providing captioning, audio description, and assistive listening systems difficult. The bigger challenge is to add these elements at the project's end. Always plan accessibility elements from the beginning, never at the end.

Captioning, audio description, and assistive listening systems shall be identified early in any plan for any audiovisual element intended to be used in a unit of the National Park System. These standards apply even to products given to the NPS by an outside entity. For example, AV programs donated to parks must have captioning, audio description, and assistive listening systems provided regardless of source. These AV elements must also be maintained so that all parts of the presentation function properly.

Park managers will continue to have the final say on the most appropriate AV solution for providing full programmatic accessibility for AV products used at their sites.

For more information visit www.nps.gov/hfc/products/av-accessibility.htm.

Audiovisual Guidelines: Mobility

- **Assembly areas** (for example, theater, auditorium, and viewing areas) shall provide wheelchair spaces, companion seats, and designated aisle seats complying with ABAAS F21 and 802. Lawn seating shall comply with ABAAS F221.5

  Assembly areas shall be accessible and free of architectural barriers, or alternative accommodations shall be provided. (See "Exhibits Guidelines: Mobility.")

- **Wheelchair spaces** shall be provided in assembly areas with fixed seating. (See ABAAS F221.2 for more information and ratios.)

- **Integration**. Wheelchair spaces shall be an integral part of the seating plan. (from ABAAS F221.2.2)

  > Wheelchair spaces must be placed within the footprint of the seating area. Wheelchair spaces cannot be segregated from seating areas. For example, it would be unacceptable to place only the wheelchair spaces, or only the wheelchair spaces and their associated companion seats, outside the seating areas that are defined by the risers in an assembly area.

- **Lines of Sight and Dispersion**. Wheelchair spaces shall provide lines of sight complying with ABAAS 802.2 and shall comply with ABAAS F221.2.3. In providing lines of sight, wheelchair spaces shall be dispersed. Wheelchair spaces shall provide spectators with choices of seating locations and viewing angles that are substantially equivalent to, or better than, the choices of seating locations and viewing angles available to all other spectators.

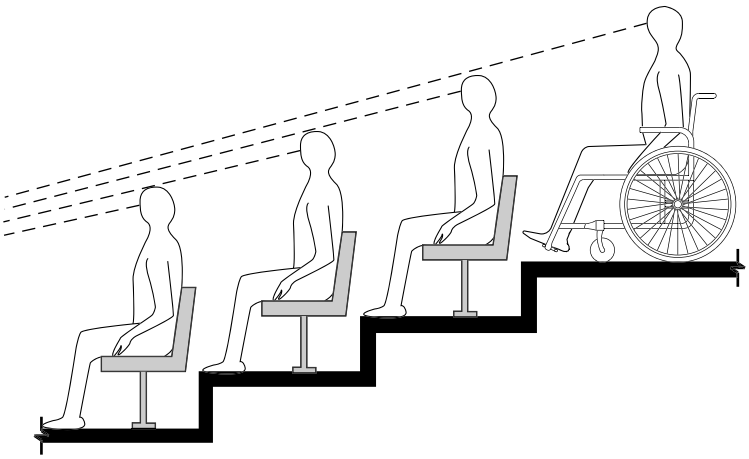

ABAAS Figure 802.2.1.1
Lines of Sight Over the Heads of Seated Spectators

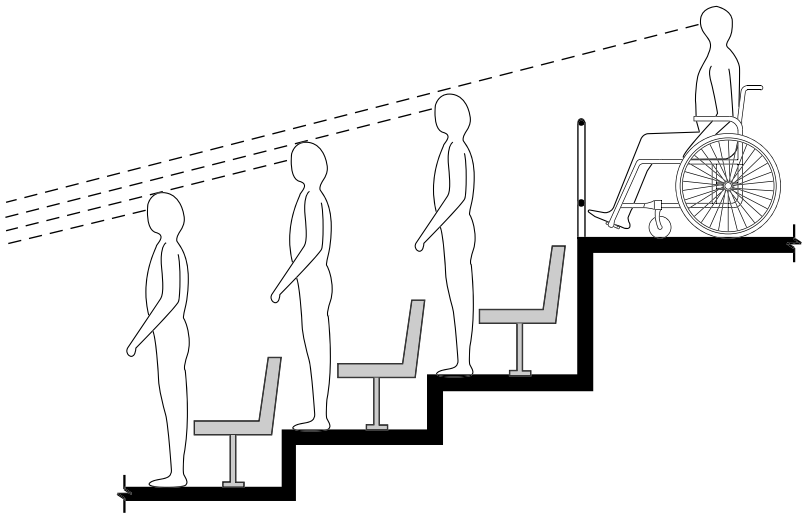

ABAAS Figure 802.2.2.1
Lines of Sight Over the Heads of Standing Spectators

- **Companion Seats**. At least one companion seat complying with ABAAS 802.3 shall be provided for each wheelchair space required by ABAAS F221.2.1.

- **Overlap:** Wheelchair spaces shall not overlap circulation paths. (See ABAAS 802.1.5.)

- **Operable Parts**. For designing video, interactive components, and control mechanisms see "Exhibits Guidelines: Mobility."

- **Non-fixed seating**. The above wheelchair guidelines relate to fixed-seating. For more on non-fixed seating, see "Exhibits Guidelines: Mobility."

Audiovisual Guidelines: Visual

Audio Description

Simultaneous audio description shall be provided. Audio description describes the visual content of video or multimedia programs. It provides individuals who are visually impaired with information that further describes the visual content not provided in the primary audio track. Audio description is a separate audio track synchronized with the program's primary audio track. An audio description narrator describes actions, gestures, scene changes, and other visual information. The

narrator also describes titles, speaker names, and other text that may appear on the screen. Audio description shall be carefully scripted and produced by trained professionals.

The audio description is recorded on a separate audio track and is not heard over the main loudspeaker(s). Visitors requesting audio description will typically receive a headset and receiver. The audio description track is then transmitted to the headset via a radio frequency or infrared signal. Only those with headsets will hear the audio description track.

Computer Interactive Programs

For technical requirements, see the *Rehabilitation Act of 1973, as amended*, Section 508.

Audio Description Tours

- Audio description tours can be part of a larger interpretive tour or serve as a standalone alternative format. If the audio description is part of a larger audio interpretive tour, a separate track is recommended.

- Ideally the device should not require visual cues, like a numeric system. However, should visual cues be used, Braille, a tactile indication on the touchpad that orients the user, or an audio prompt for a numeric selection are acceptable.

For more information, see "Audiovisual Guidelines: Hearing, Audio Tours."

Audiovisual Guidelines: Hearing

Captions

All audiovisual programs with spoken dialogue shall be open-captioned, and the captions shall be displayed at all times. Captions display spoken dialogue as printed words on television screens, computer monitors, projection screens, caption boards, and other visual displays. Captions are designed to enable viewers with hearing loss to participate fully when viewing video or multimedia productions without self-identifying.

All captions shall be produced to include identification of speakers and information regarding on- and off-screen nonverbal sound effects. Text indicating sound effects, such as "phone ringing," "footsteps," or "laughter," as well as symbols indicating other sounds like music, should be used. Captions also benefit people learning a foreign language, learning how to read, or watching TV in a noisy area, and people who understand best by processing visual information.

The Department of the Interior requires that all new programs created after January 2009 be produced with open captions or subtitles (SDH) that are displayed on screen at all times. Programs created with closed captions before this date can continue closed-captioned programs, but the closed captions must be opened and displayed on screen or on a caption board at all times.

Always displayed, on-screen open captions help visitors who would otherwise not ask for this accessibility feature. This requirement reduces the amount of equipment required for playback, lowers the initial purchasing costs, and saves time and money required for troubleshooting, repairing, and replacing equipment.

"Captions" is a term often used generically. But there are different techniques and approaches to producing captions that are important to note. As noted the Department of the Interior requires that captions be displayed on screen. The following two production approaches meet the department's requirements.

Currently Accepted Captioning Presentations

- **On-screen open captions** are displayed automatically as part of the video. Users need not select them; they are permanently superimposed on the image and cannot be turned off. On-screen open captions also offer more flexibility in the use of upper and lowercase letters, thus increasing their readability. Harpers Ferry Center recommends that captions use upper and lowercase letters.

- **Subtitles for the Deaf and Hard of Hearing (SDH):** Subtitles for the Deaf and Hard of Hearing are produced for people with hearing loss and therefore with the same intent as both closed and open captions. This means that in addition to the spoken word, SDH also identify speakers and indicate nonverbal sounds like music and sound effects using either text or symbols.

Unlike captions, SDH are typically not embedded in a black box, have an outline or rim shadow to aid in readability, and use upper and lowercase letters.

Other Captioning Presentations

It is important to be familiar with other captioning techniques and approaches when discussing the final captioning format. Older productions using these techniques and approaches may still may be found at National Park System sites. Following are descriptions of these caption types.

- **Closed Captions** appear on screen only when the viewer (or AV technician) has specified that they appear. Closed captions can be turned on or off with a caption decoder that lets otherwise-hidden data in the television signal show on the user's TV screen or computer monitor. Many newer television models allow viewers to toggle captions on or off with ease. Closed caption are not an acceptable on-site presentation option. However, for distribution such as sales items, closed captions are acceptable.

- **Caption Board:** A caption board is a separate LED screen that displays the captions. Caption boards have been a common presentation approach at park sites. Already installed caption boards do not have to be replaced. However, based on the current Department of the Interior Civil Rights Directive 2008-05, caption boards should no longer be installed.

  Caption board sizes vary. The correct size is determined by the size of the room, the size of the screen, and the distance between audience and screen. Caption boards require a caption decoder.

  The correct size and placement of the caption board is essential for proper readability. The caption board should be placed as close to the video screen as possible; screen frame and caption board mounting hardware should be the only limiting factors. It should be placed underneath the main screen. (If the caption board cannot be placed underneath the screen, it can be placed above, but only as a last resort.)

  The caption board's LED intensity should be set to match the intensity of the video image so that neither display overpowers the other. Green is the preferred LED color.

Assuming the caption board is placed below the screen, captions should be produced for the top two lines of the four-line caption space. If, as a last resort, the caption board is placed above the screen, captions should be produced for the bottom two lines of the four-line caption space.

The size of the caption board is determined by the viewing distance of the farthest viewer from the display. Caption boards with an LED height of 0.7 inches (Museum Technology CC-1000 or equivalent) can be viewed up to 30 feet. Caption boards with an LED height of 1.2 inches (Museum Technology CC-2000 or equivalent) can be viewed up to 50 feet. Caption boards with an LED height of 2.1 inches (Translux Datawall or equivalent) can be viewed up to 90 feet.

Caption boards shall use closed captions produced in **all uppercase letters for readability**. (Caption boards do not handle lowercase letters well. Any letters with a descender (g, j, p, q, and y) are "pushed up" so that the bottom of the descender is even with the bottom of the other letters, detracting from readability.)

- The **Rear Window** captioning system may only be used in IMAX and other large-format theaters when no other approach is feasible. This system displays reversed captions on an LED caption board mounted in the rear of the theater. To use the system, visitors must request a transparent acrylic panel which they attach to their seat. This panel reflects the captions so that they appear superimposed on or beneath the movie screen. The panel should be wiped clean after each use.

- **Subtitles for Languages Translations:** Subtitles are used to translate dialogue into a different language. They are primarily intended for hearing audiences who need language translation, while captions are primarily intended for people with hearing loss. Subtitles rarely convey nonverbal sounds like music or sound effects.

  Whereas closed captions, when opened, are typically displayed on screen as white letters in a black box, subtitles generally are not displayed within a black box, do not have standardized font requirements, and correctly display upper and lowercase letters.

  Subtitles produced for language translation purposes only are not an acceptable way of meeting the captioning regulation. SDH are acceptable. (See "Audiovisul Guidelines: Hearing/Currently Accepted Captioning Presentations/SDH.")

Caption Specifications

HFC recommends the following general caption-production specifications:

- Captions shall appear on no more than two lines, with no more than 32 characters per line.
- Captions shall be pop-on/pop-off (vs. roll-up).
- Captions shall distinguish between **narration and spoken dialogue**.
- Captions shall indicate the presence of music and sound effects.
- On-screen open captions shall use upper and lowercase letters.
- On-screen captions shall be no more than two lines and placed at the bottom of the screen. When images or on-screen titles interfere with caption readability, the caption placement may temporarily switch from the bottom to the top of the screen, but should not cover faces.

Scripts

Printed scripts are NOT an acceptable alternative to the required open captioning. However, visitors may want to see a verbatim script to prepare for their visit or while at the park. As a standard procedure, copies of scripts shall be provided to parks and shall be available—in standard and in large print size—to visitors upon request. The scripts should also be available on the website. (See "Publications.")

Assistive Listening Systems (ALS)

An assistive listening system is an amplification system utilizing transmitters, receivers, and coupling devices to bypass the acoustical space between a sound source and a listener by means of induction loop, radio frequency (commonly known as an FM system), infrared, or direct-wired equipment. (from ABAAS F106.5)

These systems and their coupling devices, known as assistive listening devices (ALDs), amplify the volume and bring the sound directly to a person's ear.

Assistive listening systems and audio amplification shall be provided. (See ABAAS F219 thru F219.3.) There are a number of assistive listening systems and device configurations available that can be tailored to each space requirement. Visitors will be given receivers, known as ALDs, with headsets or neckloops when radio frequency (FM) or infrared (IR) transmitters are used to distribute the audio signal. Both headsets and neckloops must be available unless an induction loop is used.

Induction loop systems use an electromagnetic coil to create a magnetic field. People who use hearing aids or cochlear implants with a T-coil can receive the sound directly by switching their hearing aid to the "T" position. No additional devices are needed. Receivers with headsets shall be available for people without a T-coil, who do not wear hearing aids, or do not have a cochlear implant.

The National Park Service does not recommend the use of ear bud style headsets because they are difficult for people with hearing aids to use and are difficult to keep sanitary.

- **Audio equipment used individually** by the visitor, including, but not limited to, telephone handsets, headsets, and sound sticks, must have individual volume controls and be T-coil compatible.

  All companies that claim their devices are T-coil compatible should be required to submit documentation to substantiate this claim.

Video without audio

All video programs containing no audio shall be identified with a label or caption that states there is no audio.

Audio Tours

These tours shall be integrated as a part of the on-site interpretive experience visitors receive.

- Audio delivery devices must have an option for operation that is easy to use, relatively passive, and **hands-free** or have a hands-free option so that visitors can use their hands to explore, for example, tactile exhibits. Also, some people learn best through touch.

- Cell phones are sometimes used as an audio tour delivery system. This can be a problem if visitors have to use their own cell phones.

Besides the cost to the user, some people with disabilities rely on cell phones to maintain their independence and must avoid depleting the batteries through nonessential use.

If the cell phone is used to provide both an interpretive and audio description tour, an alternative format shall be considered, such as a wand or a cell phone that can be checked out from the visitor center.

- When audio tours are available, both headsets and neckloop couplers shall be available and appropriate signage shall be posted.

- Many of the audio guides are T-coil compatible, so neckloops are only necessary when a hands-free version is needed. (See ALS above.)

- **Transcripts** of the audio tour shall be available in standard and large-print size formats.

Ranger (Docent)-Led Tours

Interpretive programs provide opportunities for visitors to make emotional and intellectual connections to park resources, mission, and interpretive themes. Personal services are ranger-led programs such as guided tours, talks, demonstrations, illustrated programs, conducted activities, and curriculum-based programs.

- Ranger-led tours shall be **hands-free** or have a hands-free option so that visitors can use their hands to explore, for example, tactile exhibits.

- **FM systems** are ideal for ranger-led tours in noisy environments or spaces with poor acoustics. Even visitors without hearing loss can benefit from FM systems in such environments.

- Receivers shall have both headset and neckloop couplers available.

- **Transcripts** of the tour shall be available in standard and large-print size formats.

Qualified sign language (and cued speech) interpreters shall be available for scheduled and/or announced tours and/or upon request with reasonable advance notice.

> A **qualified interpreter** is one who is able to interpret effectively, accurately, and impartially, both receptively and expressively, using any necessary specialized vocabulary.

Audiovisual Guidelines: Cognitive

Narrations for visitors with cognitive disabilities are the same as for visitors without cognitive disabilities. There is no separate audio track.

For more information, see “Exhibits Guidelines: Cognitive.”

4 Conservation (Artifacts)

HFC provides professional conservation services that ensure the long-term preservation of museum objects in national park collections. Preservation and conservation of the important cultural resources of the NPS require expert and highly skilled specialists. At HFC, conservators work meticulously to preserve and restore objects of social and cultural significance. They work on diverse materials ranging from fine and decorative art objects to natural history specimens.

For more information, visit www.nps.gov/hfc/products/cons.

The HFC Conservation staff:

- **Treat objects** for exhibition and long term storage.
- Participate in the **HFC exhibit program**. (See "Exhibits.")
- Perform **collection condition surveys** and conduct preventive care training.
- **Research and analyze** artifact materials and topics related to NPS collections for improved preservation and interpretation.

Conservation Guidelines

For information on **accessible conservation planning documents**, see "Publications. Guidelines: Visual, Reports."

5 Exhibits

Exhibits are multi-media experiences. Because people learn in many ways, exhibits use diverse techniques to interpret park resources, teach concepts, and stimulate interest. Exhibits tell stories using objects, text, images, multimedia, interactive devices, figures, models, and lighting effects. Successful exhibits communicate to the visitor the significance and context of artifacts that the NPS has chosen to collect, conserve, and display.

Visitors are free to move through exhibits at their own pace. They may often interact physically with exhibits and learn by doing. The goal is not only to educate but to inspire. Display items range from tools and weapons to the art of prehistoric and historic American cultures. Webs of life in our natural habitats are shown with plant and animal models. Illustrations complete stories and set them in larger contexts. Art is used to reconstruct early events for which no visual material exists.

Exhibits sometimes must be put in places ill-suited to their purpose. Pre-existing architectural structure or décor may limit many exhibit design decisions. Because the situations encountered in NPS exhibit spaces are so diverse, thoughtful, sensitive design can go a long way to produce NPS exhibits that can be enjoyed by a broad range of people.

For more information, visit www.nps.gov/hfc/products/exhibits.

Exhibits Guidelines: Mobility

Floors or Ground Surfaces

(See ABAAS 302.)

- Floors and ground surfaces shall be **stable, level, firm, and slip-resistant**.

- **Carpet or carpet tile** shall be securely attached and shall comply with ABAAS 302.2 "Carpet." Exposed edges of carpet shall be fastened to floor surfaces and shall have trim on the entire length of the exposed edge. Carpet edge trim shall comply with ABAAS 303, "Changes in Level."

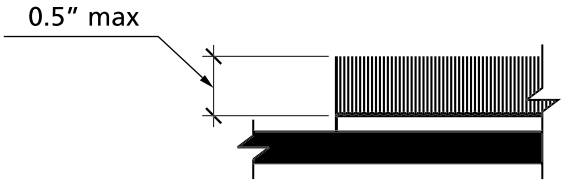

ABAAS Figure 302.2
Carpet Pile Height

- **Changes in level:** See ABAAS 303.

  Vertical. Changes in level of ¼-inch high maximum shall be permitted to be vertical.

  Beveled. Changes in level between ¼-inch and ½-inch shall be beveled with a slope not steeper than 1:2. (See also ABAAS advisory 303.3.)

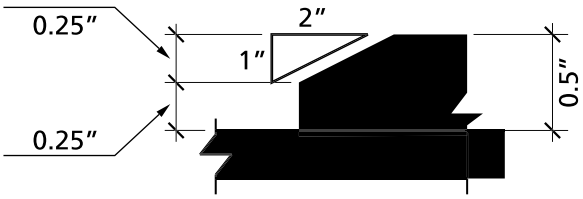

ABAAS Figure 303.3
Beveled Change in Level

Ramps. Changes in level greater than ½-inch high shall be ramped, and shall comply with ABAAS 405. In most cases ramps shall be as gradual as possible and not exceed a 1-inch rise in 12-inch run.

- **Position:** Unless otherwise specified, clear floor or ground space shall be positioned for either forward or parallel approach to an element.

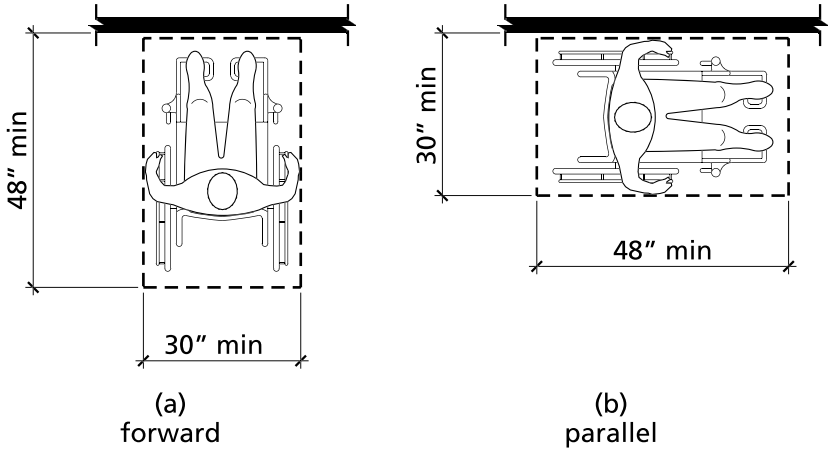

ABAAS Figure 305.5
Position of Clear Floor or Ground Space

- **Maneuvering Clearance.** Where a clear floor or ground space is located in an alcove or otherwise confined on all or part of three sides, additional maneuvering clearance shall be provided in accordance with ABAAS 305.7.1 and 305.7.2.

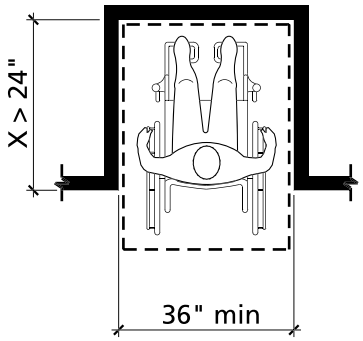

ABAAS Figure 305.7.1
Maneuvering Clearance in an Alcove, Forward Approach

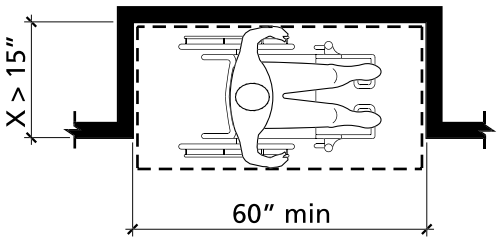

ABAAS Figure 305.7.2
Maneuvering Clearance in an Alcove, Parallel Approach

Circulation Space

- **General:** Circulation through the exhibit space shall meet the requirements of an accessible route as described in ABAAS, Chapter 4, "Accessible Routes."

  The exhibit space should be free of architectural barriers. If, for example, an exhibit is in an inaccessible area of a historic structure, at least one method of alternative accommodations shall be provided. If the inaccessible space is of crucial interpretive significance to the site, an alternative method of accommodation shall be provided. (See "Interpretive Planning Guidelines" and "Appendix D: Alternative Media Formats.")

- **Passageways** through exhibits shall be at least 36 inches wide to provide adequate clearance for wheelchairs.

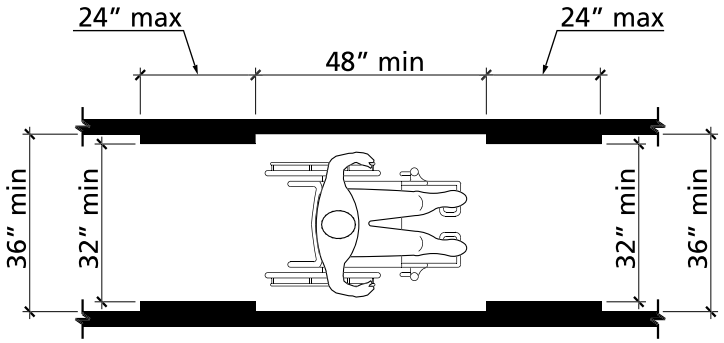

Figure 403.5.1
Clear Width of an Accessible Route

- **Turning space:** If an exhibit passageway reaches a dead-end, a turning space shall be provided by either a T-shaped turning space which complies with ABAAS Figure 304.3.2 or a circular space of 60 inches diameter minimum. The space shall be permitted to include knee and toe clearance complying with ABAAS 306.

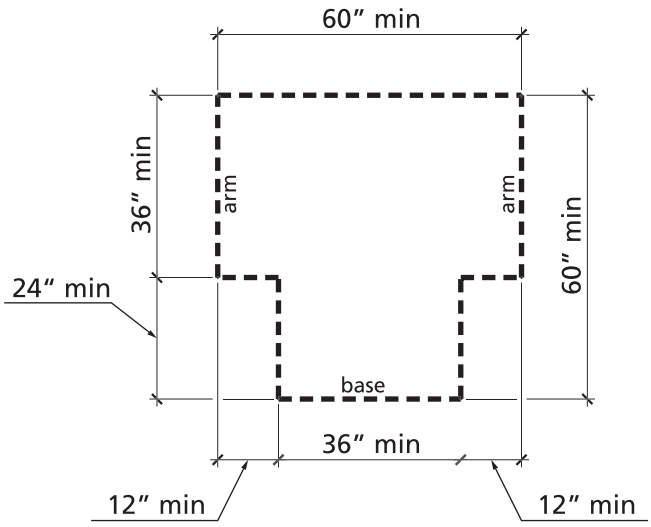

ABAAS Figure 304.3.2
T-Shaped Turning Space

Protruding Objects

(See ABAAS 307.)

- **Objects projecting from walls** with their leading edges between 27 inches and 80 inches above the floor shall protrude no more than 4 inches in passageways or aisles. Objects projecting from walls with their leading edges at or below 27 inches above the floor can protrude any amount. (See ABAAS Figure 307.2 below.)

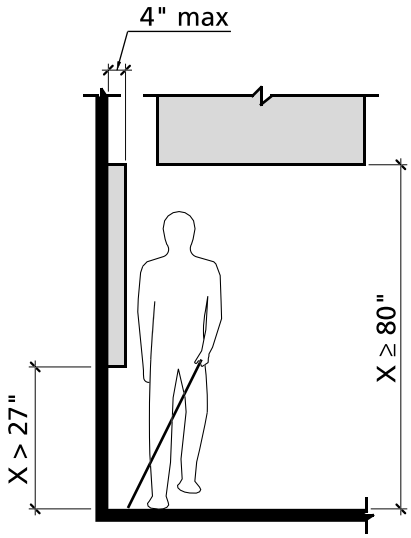

ABAAS Figure 307.2
Limits of Protruding Objects

- **Passageways** or other circulation spaces shall have a minimum clear headroom of 80 inches. For example, signage hanging from the ceiling must have at least 80 inches from the floor to the bottom edge of the sign. (See ABAAS Figure 307.2 above.)

- Protruding objects shall not reduce the clear width required for accessible routes (See ABAAS 307.5.)

■ **Post-Mounted Objects**: Free-standing objects mounted on posts or pylons will overhang a maximum of 12 inches from 27 inches to 80 inches above the floor. (See ABAAS Figure 307.3 below.)

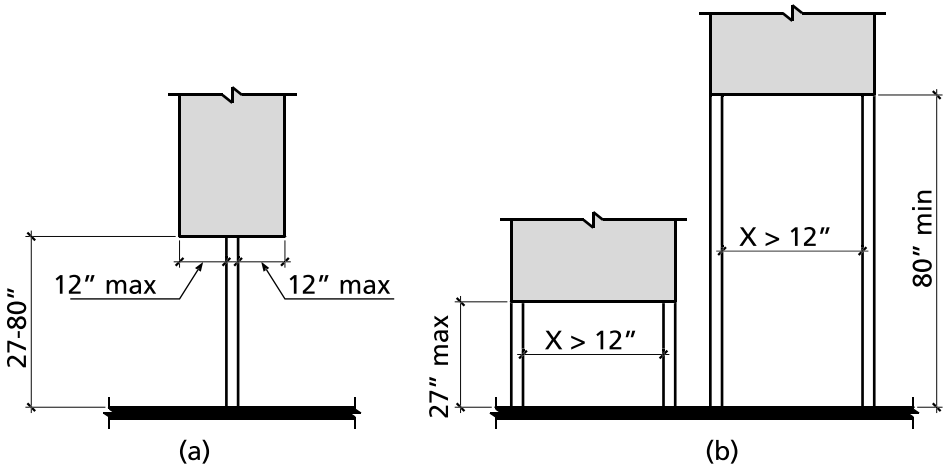

ABAAS Figure 307.3
Post-Mounted Protruding Objects

■ **Vertical Clearance** shall be 80 inches high minimum. Guardrails or other barriers shall be provided where the vertical clearance is less than 80 inches high. The leading edge of such guardrail or barrier shall be located 27 inches maximum above the finish floor or ground.

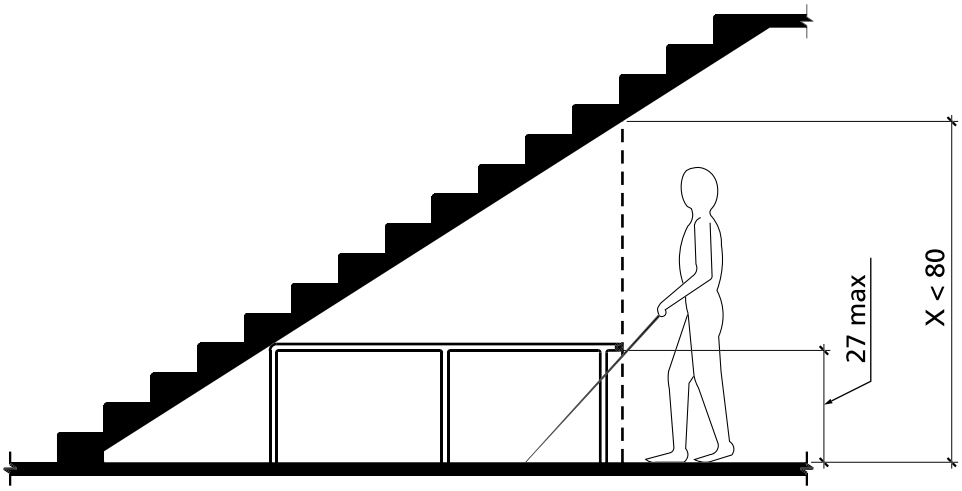

ABAAS Figure 307.4
Vertical Clearance

- When a horizontal exhibit element is located on a platform, table, pedestal, or otherwise surrounded by a railing over which visitors will lean, a vertical clearance of 80 inches minimum shall be maintained up to 36 inches inward from the railing.

Artifact Cases

- **Maximum height** of bottom of artifact case shall be no higher than 30 inches from the floor of the room. This includes vitrines that are recessed into an exhibit wall.

- **Artifact labels** on a vertical surface shall comply with "Typography" below. Artifact labels on a horizontal surface shall be mounted at an angle to maximize their visibility to all viewers.

- **Transitions between glazing and framework** of artifact cases or glass doors which surround exhibits or artifacts shall be placed in the visitor's line of sight and not hidden behind railings, platforms, or other exhibit structures. This is so that the glazing is immediately visible to the visitor, and the visitor does not mistakenly think he or she can lean into the opening for a closer look.

- **Angled tables** are more accessible to wheelchair users.

Touchable Exhibits—operated or manipulated with one hand

The following reach ranges refer to items briefly touched with one hand, such as a push button or small, tactile bas-relief model fastened to a panel or reader rail.

- **Reach Ranges**: See ABAAS 308 for more information, including children's reach ranges, obstructed/unobstructed reaches, and exceptions. NPS uses the common reach ranges of adults and children ages 9 and above for forward and side unobstructed reaches.

- **Forward Reach** (unobstructed): For touchable exhibits positioned unobstructed on a vertical surface, the high forward reach will be 44 inches maximum, and the low forward reach will be 16 inches minimum above the finished floor. These are common measurements for adults and children ages 9 and above. (See NPS modified ABAAS figure 308.2.1. below)

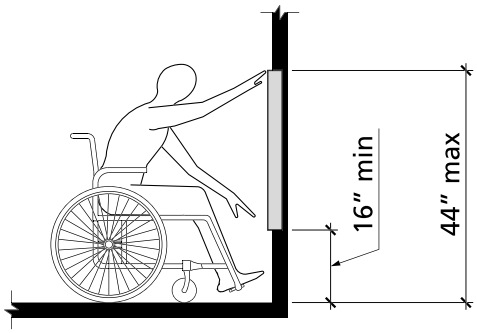

NPS modified ABAAS Figure 308.2.1
accessible to adults and children ages 9 and above
Unobstructed Forward Reach

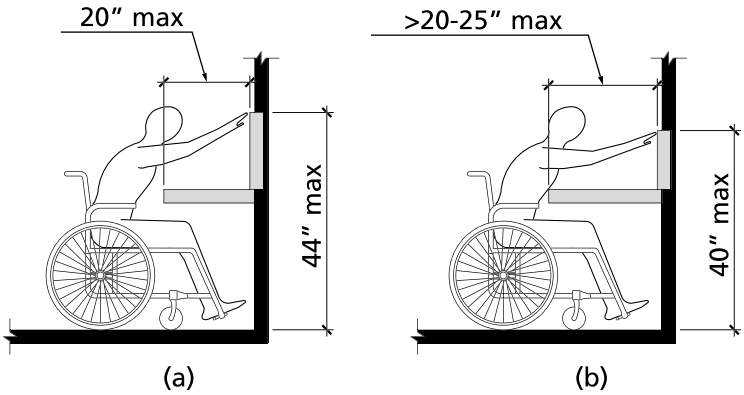

NPS modified Figure 308.2.2
Obstructed High Forward Reach

- **Side Reach (unobstructed):** Where a clear floor space allows a parallel approach to a touchable exhibit and the side reach is unobstructed, the high side reach will be 44 inches maximum, and the low side reach shall be 16 inches minimum above the finished floor. These are common measurements for adults and children ages 9 and above. (See NPS modified ABAAS figure 308.3.1 below.)

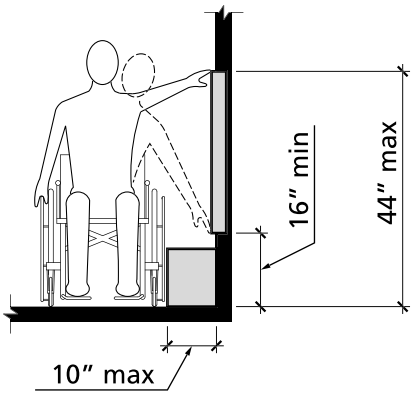

NPS modified Figure 308.3.1
accessible to adults and children ages 9 and above
Unobstructed Side Reach

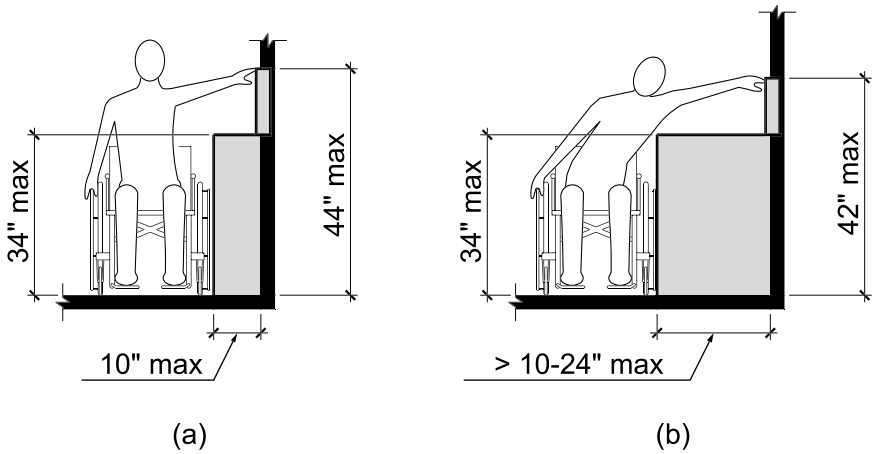

NPS modified Figure 308.3.2
Obstructed High Side Reach

- **Operable Parts:** See "Operable Parts of Interactive Exhibits" below.

Touchable Exhibits—operated or manipulated with two hands

The following reach range refers to more detailed, complex, large, tactile interactive exhibits which may contain braille, raised lettering, bas-relief sculpting, various textures, and may include switches or buttons to activate multimedia such as audio programs. The visitor should be able to use both hands simultaneously to interact with the exhibit.

- **Reach Range**: Flat-mounted or tabletop exhibits to be touched or closely approached, such as relief maps and tactile exhibits, shall allow for a clear knee space that is a minimum of 36 inches wide and 27 inches clear height above the floor surface. Where it does not create a hazard for persons with low vision, 29 inches high knee space is recommended for wheelchair users. (See Figure 18-1 below; courtesy California State Parks Accessibility Guidelines.)

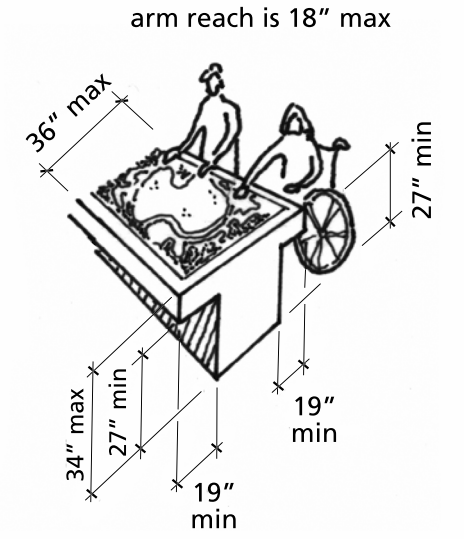

California State Parks Accessibility Guidelines
Figure 18-1
Flat-mounted Tactile Exhibit

Railings and barriers

- **Vertical Protective Barriers:** Vertical barriers to protect artifacts, models, multi-media presentations, or other exhibit elements, which are intended to be viewed but not touched by visitors, shall have a maximum height of 36 inches from the floor. The barrier shall be constructed to provide unobstructed viewing over the barrier by persons in wheelchairs.

- **Reader Rails:** Railings or barriers that are also the structural support for angled interpretive panels, which may include text, graphics, touchable models, interactive exhibits, and audiovisual elements, are called reader rails. Reader rail panels shall have a maximum height of 30 inches from the floor to the front bottom edge of the panel. The angle of the panel should be 30 degrees. Reader rail panels shall meet the requirements for Protruding Objects under ABAAS 307.2.

Information Desks and Work Surfaces

Information desks and sales counters shall include a section made to accommodate both a visitor in a wheelchair and an employee in a wheelchair working on the other side. A section of the desk/counter shall have the dimensions specified below.

- **Work surfaces** shall be between 28 and 30 inches in height above the finished floor. Ideally, this will accommodate the needs of both adults and children ages 6 and above. (See ABAAS 902.)

  The work surface shall never be below 28 inches or above 34 inches in height to comply with ABAAS 902.

- **Knee clearance space**: See "Seating" below.

- **Width of top surface of section**: at least 36 inches. Additional space must be provided for any equipment like a cash register.

- **Area underneath and behind desk**: Since both sides of the desk may have to accommodate a wheelchair, this area should be open all the way through to the other side. There shall be no sharp or abrasive surfaces under the work surface desk. (See ABAAS 804.3.3.)

  The floor space behind the counter shall be free of obstructions. The finished floor treatment extends underneath the desk.

Seating—Interactive Stations/Work Areas

- **Toe Clearance:** See ABAAS Figure 306.2 below. See ABAAS 306.2 for the complete requirements.

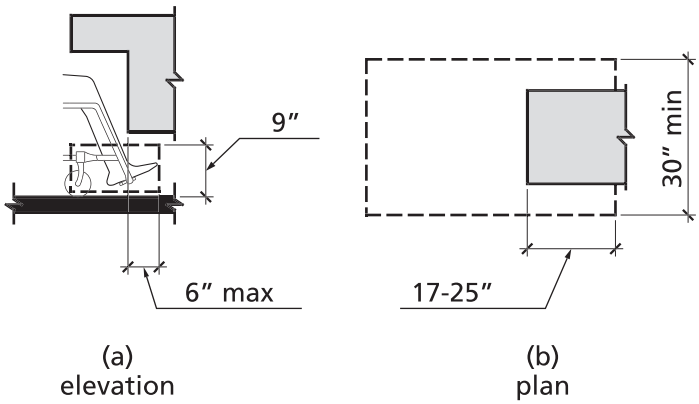

ABAAS Figure 306.2
Toe Clearance

■ **Knee Clearance:** See ABAAS 306.3 for the complete requirements.

The knee space underneath a work desk shall be:

27 inches minimum above the finished floor.

25 inches maximum in depth.

30 inches wide minimum.

Provide a clear floor space of at least 30 inches by 48 inches in front.

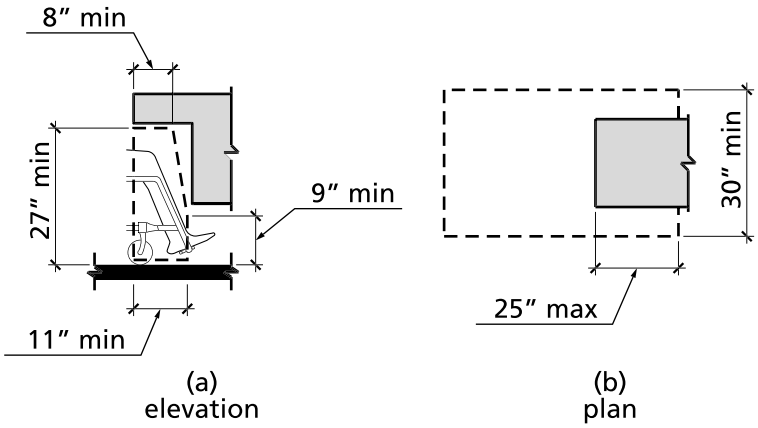

ABAAS Figure 306.3
Knee Clearance

Mini-theaters within a museum exhibit area

When the exhibit incorporates a short multimedia presentation, like a video, in a mini-theater with bench seating (see ABAAS 903.3 and 903.6 for information), space shall be provided for at least one visitor in a wheelchair.

■ **The wheelchair space width** shall be 36 inches wide minimum.

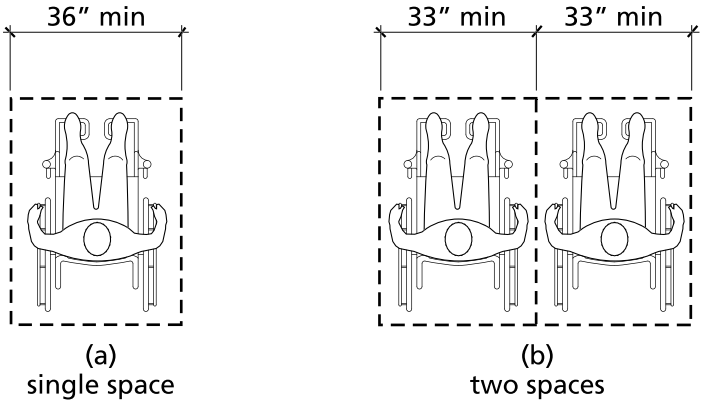

ABAAS Figure 802.1.2
Width of Wheelchair Spaces

■ **The wheelchair space depth:** Where a wheelchair space can be entered from the front or rear, the wheelchair space shall be 48 inches deep minimum. Where a wheelchair space can be entered only from the side, the wheelchair space shall be 60 inches deep minimum.

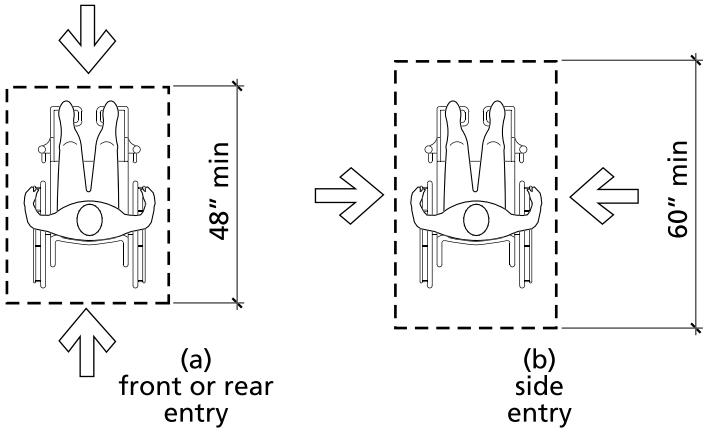

ABAAS Figure 802.1.3
Depth of Wheelchair Spaces

- **Unobstructed view:** The wheelchair space shall be located so as to provide an unobstructed view of the multimedia presentation.

- **Overlap:** Wheelchair spaces shall not overlap circulation paths.

- **Non-Fixed Seating:** If seating in a mini-theater is in the form of benches, at least one seat with back and arm support shall be provided. This support is essential for people who have mobility impairments—seat arms and backs offer support points for people lowering into and rising out of seats.

Operable Parts of Interactive Exhibits:

- **Operable parts** of mechanical interactive exhibits shall be operable with one hand and shall not require tight grasping, pinching, or twisting of the wrist. The force required to activate operable parts shall be 5 pounds maximum. (See ABAAS 309.4.) A person with a closed fist should be able to use the object or control.

- **Push buttons** for electrically-activated interactive exhibits or audio-visual programs shall be spaced a minimum of 0.7 inch from the center of one button to the closest edge of the next button. (See *Hands-On Architecture, Access Board Research*, Figure 2.2.) Multiple buttons shall be arranged in either vertical or horizontal rows.

- **Height:** Operable parts shall be placed within one or more of the reach ranges specified in ABAAS 308. (See also "Touchable Exhibits" above for NPS modified reach ranges.)

Exhibits Guidelines: Visual

Tactile Exhibits

- **Touchable examples:** Tactile models and other touchable exhibit items should be used whenever possible. Examples of touchable exhibit elements include relief maps, scale models, raised images of simple graphics, reproduction objects, and replaceable objects (like natural history or geological specimens, cultural history items, etc.). (See "Appendix D: Alternative Media Formats.")

- **Hands-on living history areas** are helpful to visitors with visual impairments. These areas allow visitors to interact with props, reproductions, and interpreters.

- **Placement** of touchable, tactile models shall be according to "Exhibits Guidelines: Mobility, Touchable Exhibits."

- **Identify the object** and communicate to visitors that the object is meant to be touched.

- Size, toe/knee/maneuvering clearances, reach ranges for the ages of the youngest members of the intended audience, etc., must all be considered. (See "Exhibits Guidelines: Mobility.")

- Be sure to use non-toxic inks on areas that people touch.

- Tactile Maps: See "Publications Guidelines: Visual."

- **Tactile Models:**

  Tactile models are an effective interpretive tool for all people, but they are critical to the understanding and perceptions of the elements being interpreted for people with visual impairments and cognitive disabilities. All models need to be designed for tactile use by all visitors. Tactile models can be everything from objects to buildings to landscapes to natural specimens such as animal life, birds, and geological features.

  The selection of the models to be developed for a facility needs to be included in the planning. The need to provide accessible tactile models should not be the only criteria. The context of the subject matter must be appropriate and significant to the overall visitor experience.

- **Production of Tactile Models:**

  The model shall be of a **material** that is comfortable to touch, resistant to wear, and finished with a coating that allows for routine cleaning.

  No applied or glued elements shall be used on the model. The model shall be cast, carved, or CNC (Computer Numerical Control) routed as one piece.

  Colors and images shall be incorporated into the material, spray-applied, or ink-jet printed. No brush-painted details or self-adhesive vinyl decals or type shall be used.

  Variety in textures shall be used to differentiate between features on

the model like differences in vegetation on a topographic landscape.

Details of the model shall be of an **appropriate scale** to be discernable by finger touch.

Three types of scales help the visitor understand the object in its entirety:

- **Actual scale**: for example, the Statue of Liberty has a tactile model of the statue's actual-size foot.
- **Miniature scale:** for example, a hand-held tactile model of the entire Statue of Liberty.
- **Enlarged scale**: to understand details

The **overall size** of the tactile model shall not be in violation of the allowable reach ranges under ABAAS 308 so that users can touch all areas of the model. Also, if the model is too large for all areas to be reached with both hands from the same position, it is more difficult to comprehend by touch. Apply reach ranges of children at a variety of ages in relationship to the subject matter. (This information can be found in the Architectural Graphics Standards, 10th Edition).

Exterior Tactile Models: Do not use metal for models placed where there will be temperature extremes. If models are placed in uncovered exterior areas, allow for drainage from the model surface to prevent puddles and ice formation.

Computer Interactive Programs

For technical requirements, see the *Rehabilitation Act of 1973, as amended*, Section 508.

Typography

Making fonts accessible is more than choosing the right font. It is also using the font properly: size, line length, leading, letter and word spacing, color, lighting, contrast, etc. Readability of exhibit labels by visitors with various degrees of visual impairment will be enhanced by following these guidelines. If one attribute is reduced—for example, lighting

or viewing distance—then other attributes must be increased to compensate for legibility, like increasing the point size and/or contrast.

- **Type size**: While a 24-point minimum type size is a general rule for exhibit text (including photo captions) viewed at eye level, readability also depends on viewing distance. A person with low vision who can read large-print publications would have to be very close to a 24-point exhibit label.

Accessible Type by Probable Viewing Distance

Probable viewing distance	**Interpretative exhibits minimum type size** (Helvetica Regular)	
	X-height mm (in)	**Set size (point)**
Less than 75 mm (3 in)	4.5 (3/16)	24
1 m (39 in)	9 (3/8)	48
2 m (78 in)	19 (3/4)	100
3 m (118 in)	28 (1-1/8)	148

Courtesy Parks Canada,
Design Guidelines for Media Accessibility

- **Typeface:** Use the most readable typefaces wherever possible, particularly for body copy.

  Accessible sans-serif fonts do not have varied stroke widths.

  Examples of accessible sans-serif fonts:

Arial	Frutiger
Futura	Helvetica
Optima	Tahoma
Treburchet	Univers

  Accessible serif fonts have limited varied stroke width.

  Examples of accessible serif fonts:

  NPS Rawlinson
  Century

- **Type style and spacing:**

  Text set in **Caps and Lowercase** shall be used in most cases, particularly for body copy.

  Letter and word spacing shall be adjusted for maximum readability. Avoid **overuse of *italic*** type.

  Special effects, such as drop shadows, are acceptable for large display type but not for secondary text or body copy

- **Type layout:**

  Flush left, rag right text alignment is easiest to read and should be used in most cases.

- **Eye level zone:** The smallest type in a vertical exhibit panel should be placed within a zone containing the range of eye level for a person in a wheelchair to a standing adult for a panel that must be approachable, with no physical barriers. This eye-level zone is approximately 40 inches to 60 inches from the floor. Adjustments would have to be made based on lighting conditions, colors, contrasts, layouts, and other design considerations. This typically applies to the body copy and photo caption type. If type cannot be placed at the appropriate

eye level, increase readability with a larger type size, more leading, smaller line length, and/or more contrasting color and background.

- **Text behind barriers:** Some exhibit text panels are inside artifact cases, behind barriers, or otherwise placed so that the visitor cannot approach closely to the panel or are impeded by reflecting glass surfaces between the visitor and the text. For these kinds of text panels, the type size, leading, line length, and color-background contrast shall be adjusted to maximize readability. Text labels in artifact cases shall be mounted on panels that are placed and angled for maximum readability by a range of people, including people in wheelchairs.

For more information on typography, see "Publications Guidelines: Visual."

Color and Contrast

- The **contrast** between the type and the background (either solid tone or image) should be a minimum of 70-percent.

  Note: The 70-percent contrast percentage is derived from the directional signage requirements in ADAAG (*Americans with Disabilities Act Accessibility Guidelines*). These specifications are for signage being viewed from a distance of 75 feet with letter sizes of a minimum of 3 inches high on a sign placed 48 to 60 inches from the floor. This guidance is for signage using one or two words, such as "Service Entrance," and not for longer text such as in exhibits or publications.

- **Red/Green Combinations:** Do not use red on green or green on red as the type/background color combination. The largest percentage of people who have color blindness are unable to distinguish these two colors. (See "Publications Guidelines: Visual, Color.")

- **Graphic Image/Text Relationships:** The use of graphics behind exhibit text can interfere with readability. Make sure that text is readable against the background image.

Contracted (Grade 2) Braille:

- Do not position Braille text below waist height, unless it is intended for children.

For more information, see "Publications Guidelines: Visual."

Samples

- During the design process, have samples made for review that show font size, typeface, color, and text/background combinations and labels, including Braille, in the exhibit.

Exhibit Lighting

For people with low vision, adequate lighting is essential.

- **Provide** sufficient, even light for exhibit text. Exhibit text in areas where light levels have been reduced for conservation purposes should have no less than 10 foot-candles (fc) of illumination, with a working usable range of between 10 and 30 fc.

- **Avoid harsh reflections and glare**. This includes finishes for text panels that are highly reflective, such as glossy or metallic surfaces. Consider the effect of glare on exhibit text as viewed from a wheelchair. Avoid high-gloss floor finishes, which can create glare.

- **The lighting system** shall be flexible enough to allow adjustments on-site.

- **Transitions** between the floor and walls, columns, or other structures, especially protruding objects and overhead structures, shall be made clearly visible. Finishes for vertical surfaces shall contrast clearly with the floor finish. Floor circulation routes shall have a minimum of 10 foot-candles of illumination.

- **Detail lights** (for exhibits) and **navigational lights** (for the building) lights must be coordinated to eliminate shadows, especially on text. Shadows may inadvertently be created by nearby objects, portions of exhibit cases, or the viewer's own body.

- **Windows** shall be treated with film to provide balanced light levels and minimize glare.

- **Back-lighting** shall be avoided when type or illustration is positive [dark] on a light background. Back-lit text panels or cases should not be placed in front of windows or bright lights (courtesy of *Design Guidelines for Media Accessibility*, by Parks Canada).

Accessible Lighting Levels

	Lux (lx)	foot-candles (fc)
Ambient lighting	50–300 lx	4.65–27.9 fc
Text Panels	100–300 lx	9.3–27.9 fc
Controls	100 lx	9.3 fc
Directional signage	200–300 lx	18.6–27.9 fc
Specimens, objects	100–300 lx	9.3–27.9 fc
Ramps, stairs	100–300 lx	9.3–27.9 fc
Visitor pathways	100–300 lx	9.3–27.9 fc

Courtesy Parks Canada,
Design Guidelines for Media Accessibility

Audio Description

Audio description of the museum exhibit as a whole is strongly encouraged and, in many instances, may be required to facilitate effective communication per Section 504 of the *Rehabilitation Act of 1973*, as amended. (See "Appendix A: Laws, Regulations, and Policies.")

Frequently, audio description has been used to provide accessibility to exhibits rather than to make the exhibits themselves accessible. Audio description in general, and audio guidance in particular, is only one of many ways to make exhibits accessible. It is not the only solution to consider when planning, designing, and producing accessible exhibits. Audio description should be used for both accessible and inaccessible components of exhibits.

- **Tell the story** as already described in the exhibit text and images visually, in a form adapted to the audio media and its consequent time limitations.

- **Describe and identify** the artifacts, models, and other objects on display in cases that cannot be touched by visitors.

- **Provide instructions and interpretive information** to enhance the visitor's experience while using tactile models or interactive exhibits.

- **Audio description** of video programs used in the exhibits is a requirement of Section 508 of the *Rehabilitation Act of 1973*, as amended.

- Audio description is particularly needed to orient people exploring tactile maps, models, and objects.

See "Audiovisual Guidelines: Visual."

Other

Approachable photographs: Some people have difficulty seeing a large exhibit, mural, or architectural feature in its entirety. Consider providing an approachable photograph of the full scene (courtesy of *Design Guidelines for Media Accessibility*, by Parks Canada).

Exhibits Guidelines: Hearing

Audio components of exhibits may include products like excerpts from oral histories, visitor-selected sound effects of wildlife, and ambient sound that fills the entire room. These components shall accommodate people who are deaf or hard of hearing by providing assistive listening systems and either open captions displayed at all times or some form of printed alternatives. A printed alternative is only appropriate if the person does not need to look at a specific place at a specific time.

- All video programs containing **no audio** shall be identified with a label or caption that states there is no audio.

- Hearing guidelines apply to **mini-theaters** incorporated in museum exhibits.

- **Handsets**, which include, but are not limited to, audio sticks, sound sticks, and telephone receivers, attached to an exhibit must have **volume control** and be T-coil compatible. The exhibit must also have a visual format available. A printed transcript is appropriate if the person does not need to look at a specific place at a specific time. Open captions are needed where a person needs to look at a specific place at a specific time, such as, but not limited to, videos. (See ABAAS 704.3 for more information.)

- Provide **descriptions of ambient sound tracks** that are part of the exhibits. This also informs hearing visitors. Add an induction loop, if it is technically possible. When multiple loops are used within an exhibit, their placement must be carefully planned.

- Provide **olfactory experiences**, but only within a confined space so that visitors can avoid it if they wish.

- Information desks shall allow for **Text Telephone service (TTY)** equipment. (See ABAAS 704.4-5.)

For more information, see “Audiovisual Guidelines: Hearing” and “Publications Guidelines: Visual.”

Exhibits Guidelines: Cognitive

Text and narrations for visitors with cognitive disabilities are the same as for visitors without cognitive disabilities. There is no separate audio track.

- Present the main interpretive themes on a **variety of levels of complexity**, so they can be understood by people with varying abilities and interests. Information shall be presented in a clear, hierarchical manner.

- **Avoid unnecessarily complex and confusing** concepts, unfamiliar expressions, technical terms, and jargon. Pronunciation aids and definitions shall be provided where needed. See examples below:

  Use "a blanket of snow" instead of "a shroud of snow" to describe snow-covered ground.

  Use "he waved" instead of "he gesticulated."

- Use **concise language and simple sentence construction**. Avoid unfamiliar words and long paragraphs.

- **Audio description** shall comply with items above and be presented so that people with varying abilities can understand it. It needs to be consistent with the other interpretive media in terminology and themes and be well organized. It should focus on a limited number of key points and not confuse the listener with too much information. (See "Exhibit Guidelines: Visual" and "Audiovisual Guidelines: Visual.")

- Easy-to-understand **graphic elements** and maps shall be used in addition to text to convey ideas.

- Maps will establish a focus and use color and other creative approaches, such as tactile and/or audio elements, to accommodate users of varying map-reading abilities.

- Use a **multi-sensory experience** with techniques to maximize the number of senses used in the exhibits. For example, many people with autism respond to tactile exhibits.

- The hands-on opportunity at **living history** areas is helpful to visitors with cognitive and visual impairments.

Exhibits Guidelines: Other

Exhibit Structures

- **Wall corners and display-case edges** and other things people can accidentally bump into should be rounded. During planning, all structures shall be evaluated from this perspective.

Exhibit Signage

- **Access symbols** such as, but not limited to, assistive listening systems, Braille, and large print shall be posted by or at information desks to promote accessibility services.

- When permanent building signage is required as a part of an exhibit project, follow guidelines in "Park Signage."

- Signs must be in compliance with ABAAS in all settings where ABAAS applies.

6 Historic Furnishings

Historically refurnished rooms offer a unique interpretive experience by placing visitors in historic spaces. Surrounded by historic artifacts visitors can feel the spaces "come alive" and can relate more directly to the historic events or personalities the park commemorates.

Access to historic furnishings for people with disabilities is an integral part of the visitor experience at NPS sites and is a significant component of programmatic access. Yet accessibility is a challenge in many furnished sites because of the nature of historic architecture. Buildings were erected with a functional point of view at odds with modern standards of accessibility.

Often, reproductions are used to refurnish an historic space. This is an opportunity to provide tactile experiences. Reproducing essential furniture pieces may enable a person who is visually impaired to benefit and participate in the understanding of the historic period or the historic personage.

The approach used to convey the experience of historically furnished spaces will vary from site to site. The goals remain the same: to give the public as rich an interpretive experience as possible given the limitations of the structure.

For more information, see www.nps.gov/hfc/products/furnish.

Historic Furnishings Guidelines

For information on accessible historic furnishings, see "Exhibits."

- **Audio description** of intricate furnishings is not always effective.

For information on accessible historic furnishings plans and reports, see "Publications Guidelines: Visual, Reports."

For information on alternative methods of presentation, see "Appendix D: Alternative Media Formats."

7 Park Signage

The NPS Sign Program, managed by HFC, provides parks with assistance in developing comprehensive sign plans and in purchasing a wide range of sign types:

Motorist Guidance Signs provide directions to motorists that help them get to parks and to move around within them. Traffic regulatory signs (stop, yield, curve, speed limit, parking, etc.) help ensure that traffic moves smoothly and safely.

Park Identity Signs identify a park entrance and major destinations within a park. They are designed to be consistent with NPS standards and to reflect the unique character of a park.

Visitor Information Signs (VIS) provide general information to visitors or information about regulations, resource protection, interpretation, or safety. In addition to signs, the system also includes bulletin cases, brochure dispensers, trash bag dispensers, campsite permit displays, and campsite registration cabinets and other hardware.

Park signs are more successful if they are not ordered individually in a haphazard way, but are the result of a deliberate and well-documented sign communication strategy. A **sign plan** developed for an entire park, or for a selected area within a park, will help visitors get the information they need to make decisions about their park experiences in a more logical manner. Using standardized designs will reduce confusion and eliminate many visual and intellectual roadblocks to good visual communication.

For more information on the NPS Sign Program and the **NPS Uni-Guide Sign Standards** please visit: www.hfc.nps.gov/uniguide (available only to computers on the NPS network).

Park Signage Guidelines

Signs that communicate effectively with those who have visual impairments (and those with none) must adhere to certain graphic design principles, especially those of typography. The UniGuide Standards carefully considered the following criteria as established by the Society for Environmental Graphic Design (SEGD) in response to the *Americans with Disabilities Act of 1990*, which has criteria similar to that of Section 504 of the *Rehabilitation Act of 1973*, as amended.

Typeface

Typefaces for the UniGuide Standards were selected for their high legibility. Based on SEGD recommendations, two classic faces were chosen: the sans-serif face Frutiger, initially designed for ease of reading on road guide signs, and Rawlinson (and its variation NPS Roadway) which was developed specifically for the National Park Service. Tests on Rawlinson show that it is a very readable font.

Although decorative fonts appeal to some because of their historic reference, they are to be avoided. Variations of Rawlinson and Frutiger (e.g., light, extra bold, condensed, expanded, italic, etc.) are generally to be avoided. In keeping with SEGD guidelines, words of all uppercase letters should be used sparingly because they are difficult to read.

Type Size

Type sizes used in the UniGuide Standards range from 30-point on signs in the Visitor Information System up to 9 inches on Motorist Guidance and Park Identity Signs.

Letter, Line, and Word Spacing

Regardless of type size, to be easily read the text must have sufficient space between characters, words, and lines. The default settings for both Rawlinson and Frutiger in the UniGuide Standards provide ample letter and word spacing; line spacing may be adjusted according to the type of sign and length of text.

Line Length

UniGuide Standards provide layout grids that help avoid text lines that are too long or too short. Paragraphs are distinguished by an open line space between them rather than by indenting. Text is set in a flush-left alignment and hyphens are seldom used, again based on SEGD recommendations.

Color and Contrast

Generally, the higher the contrast between type and its background, the more readable the type. According to the SEGD, contrast may be achieved by black text on a light background or white text on a dark background. UniGuide Standards prescribe either black or white type; other colors are used sparingly for emphasis or to designate specific subjects. Back-

grounds are typically dark or mid-tones; white backgrounds create glare and are to be avoided.

For more information, see "Publications Guidelines: Visual, Publications—Standard print size, Text, Contrast."

Content and Layout

SEGD guidelines state that "information (layouts) should follow clear hierarchical patterns, and the elements . . . should be sensibly located and follow logical progressions." Informational signs in the UniGuide Standards present information in easily understood sequences, beginning with a headline, continuing with a text block that briefly presents the sign's subject or purpose, and concluding with more details, supplemented by illustrations and symbols as appropriate. Purely decorative elements are avoided so that text is presented in clearly defined blocks, again based on SEGD guidelines.

For more information about signage accessibility, see "Promoting Accessibility."

8 Publications

The official park brochures and handbooks developed by HFC are known for their reliability, thoroughness, visual appeal, and standard design elements that contribute to NPS graphic identity. The most traditional of the various media, publications remain a core element in a park's interpretive program. As park visitation increases and personal services decrease, the on-site portability of publications give visitors significant interpretive, logistical, and safety information. Publications are the one interpretive medium visitors can take with them as a souvenir and handy home reference. Because publications offer a wide range of information, especially safety, it is critical that people with disabilities receive the same information—of the same quality—as other visitors.

Parks and other NPS offices produce other types of publications for the public. **Site bulletins** provide more specialized information about a specific site or topic. **Park newspapers** give visitors access to seasonal or temporary topical information not appropriate for the official park brochure. Planning documents like **historic furnishings reports**, **interpretive plans**, **general management plans**, and **conservation reports** provide specialized information for park operations and interpretation.

Official park brochures shall list services and facilities available for persons with disabilities (such as TTY phone numbers) and describe significant barriers. Parks can take this a step further by producing a specialized **Accessibility Site Bulletin** with more detailed information pertinent to visitors with disabilities. A template for this type of site bulletin will be posted on the NPS Graphic Identity Program website. See www.graphics.nps.gov (available only to computers on the NPS network). Note that these site bulletins should be in large print size—18 point minimum—and follow the large print size criteria below.

Publications that are considered "readily available," like the official park brochure, newspaper, and site bulletins, must also be provided in all alternative formats—Contracted (Grade 2) Braille, large print, audio description, and electronic (word processing format on the Internet and disc). To estimate the quantity of each format to keep on hand, determine the percentage of total park visitors needing each format and anticipate how long each format edition will remain current.

Like the standard-size publication that is given to visitors to keep, alternative format publication users may permanently keep their publications.

For publications that must be ordered, the same turnaround time is required as for standard print publications.

The *HFC Editorial Style Guide* is a valuable resource for promoting clarity and consistency in publications, which are essential elements of universal accessibility. (See www.nps.gov/hfc. Click "HFC Style Guide.")

For more information, visit www.nps.gov/hfc/products/pubs.

Publications Guidelines: Mobility

- Park brochures, site bulletins, and sale items shall be distributed from accessible locations and heights. (See "Exhibits Guidelines: Mobility.")
- Park brochures and Accessibility Site Bulletins shall carry information on the accessibility of facilities, trails, and programs.
- Publications shall not have complicated folds. They must be able to be unfolded with the use of one hand.

Publications Guidelines: Visual

Publications—Standard Print Size

Text (standard print size)

- **Fonts:** Making fonts accessible is more than choosing the right font. It is also the proper use of the font: size, line length, leading, letter and word spacing, color, contrast, etc.

  For information about accessible font proportions, see www.si.edu/opa/accessibility/exdesign/start.htm (Label Design and Text, Fig. 13).

  The standard NPS typefaces are sans-serif Adobe Frutiger Open Type and serif NPS Rawlinson Open Type. For more information, see www.graphics.nps.gov/typefaces.htm (available only to computers on the NPS network).

- Some samples of **accessible fonts**:

Sans-Serif: Arial
Frutiger 55 and **65**
Helvetica (Regular and **Bold**)
Univers 55
Futura

Serif: NPS Rawlinson
Century
Times Roman
New Century Schoolbook

- Some samples of **non-accessible fonts**:

Sans-Serif: Helvetica (Light and **Black**)
Univers 45

Serif: *NPS Rawlinson italic*
(can be used for occasional scientific name, small quote, etc.)
Times Bold
New Century Schoolbook (Bold)

Decorative and *Script*: ECCENTRIC STD
Brush Script Std

The selection of fonts should be considered based on the recommendations of organizations that specialize in determining accessible fonts. The following organizations have done extensive research on fonts: American Printing House for the Blind, American Foundation for the Blind, and Lighthouse International.

- Select and define a type hierarchy based on the organization of the content. Various typographic devices can help differentiate text: size, type weight, numbers, letters, bullets, heads and subheads, and placement.

No extremely extended or compressed typefaces shall be used for body text. For display type, use condensed or extended type treatments sparingly.

- Avoid **overuse of *italic*** type. Most organizations representing people with low vision recommend against the use of *italic* type since it is difficult to read for those with vision loss. A suitable alternative to *italics,* such as book titles and ship names, is the use of "quotation marks."

- **Type Size:** Use the largest type size appropriate for the layout, line length, and font characteristics. A suggested size for body text is 10 or 11 point, depending on the font weight, spacing, and line length (column width). Smithsonian Institution and SEGD guidelines recommend 12-point type.

- **Type layout/Alignment:**

  Flush left, rag right text alignment is easiest to read and should be used in most cases.

- **Line length** depends on the font's letter forms and point size selected.

- **Font size equivalent**: Keep in mind that different fonts appear to be different sizes, even when specified at the same size. If a font appears too small, simply increase its point size. For example:

  Arial 16 Point, 18 Point

  Times New Roman 16 Point, 18 Point

  Garamond 16 Point, 18 Point

- **Leading:** Leading is the measure from the base of one line to the base of the next line. It shall be at least 20-percent greater than the font size used. Example: 10-point type on 12-point leading.

  Select a type size and leading for the primary text that is appropriate for the width of the column, size of the page, and format. Example: Frutiger 10 point on 12-point leading may be as easy to read as NPS Rawlinson 11 point on 13-point leading.

- **Proportional letterspacing:** Frutiger and NPS Rawlinson are both proportionally letterspaced—see below—making them easier to read as body text. Courier is not proportionally letterspaced.

> **Frutiger** has proportional letterspacing; **mmm** is wider than **iii**.
>
> **NPS Rawlinson** has proportional letterspacing; **mmm** is wider than **iii**.
>
> **Courier** does NOT have proportional letterspacing; **mmm** is the same width as **iii**.

- Use the standard **typographer's** quotes, apostrophes, dashes, and other punctuation. Word processing and page layout programs provide preference menus that allow for these choices.

- **Body text** and most display type should be set in **Caps and Lowercase**. Reserve ALL CAP usage for short headlines or brief safety warnings. Caps and Lowercase text is easier to read than ALL CAPS.

- Use **hyphenation** sparingly to avoid extremely long or short lines. Avoid using more than two consecutive hyphenated lines.

- **Avoid underlining**. Use italics, bold, or another type device for emphasis. If underlining must be used, make sure it does not touch the underlined letters.

- **Reversed-out type** (such as white on a black background) should be at least 11-point, medium or bold, sans-serif.

  Avoid reversed-out type for documents produced on low-end home or office printers.

- **Inks and toners** should be applied neither under-inked nor over-inked, for clear, crisp letter forms and image details.

- **Contrast** of typeface to background shall be between 70-percent and 95-percent. Avoid 100-percent black type on white paper to reduce glare. Use 100-percent black type on a five-percent toned background or neutral tones paper stock instead. For an explanation, see "Exhibits Guidelines: Visual, Color and Contrast."

A simple test for contrast is to make a black-and-white photocopy of the image-text combination without adjusting the photocopier for contrast. Then check the readability.

A more accurate test would be to change the image/text combination to gray tones in a software like Adobe Photoshop, then take a reading of the percentages of gray with the eye dropper tool. The test image resolution should be at least 300 dpi for photos and 1200 dpi for line art and text.

Using Adobe Photoshop, make a copy of your image. Using the copy:

Go to Image>Mode>grayscale
Open Windows>Info box
Choose the eye dropper tool
Choose sample size of at least 5 x 5 average pixels
Click the eye dropper tool on the background
Check Info box for K (Black) percentage

Graphics (standard print size)

- **Photographs** should have a wide range of grayscale variation. Select black-and-white or color images that have a focused subject and uncomplicated surroundings, especially for printing on low-end printers.

- **Line drawings** and floor plans should be clear with limited detail, line weights, and tones. Labels should be 8-point minimum.

- If printing in high quantities on **commercial offset presses**, for example through the Government Printing Office (GPO), image resolution should be at least 300 dpi for photos and 1200 dpi for line art.

Paper (standard print size)

- For low-end printers, the paper should be typical plain stock available in offices and homes. (This is important if site bulletins will be posted online for users.)

- For offset printing the vendor should specify a paper quality appropriate for the product. To match the Unigrid brochure paper, ask for: white no. 1 coated text, dull-finish, basis weight 70 lbs. per 500 sheets, 25 by 38 inches, equal to JCP Code A261. Use 60 lb. paper as an alternate, but be aware that one side may "show through" to the other.

- For other publication types, see the NPS Graphic Identity Program website, www.graphics.nps.gov (available only to computers on the NPS network).

Publications—Large Print Size

Publications that are considered "readily available" shall be available in large print size. See "Publications" introduction about quantity and users being allowed to permanently keep the large-print format.

Templates of NPS large-print brochures and maps are posted on the NPS Graphic Identity website, www.graphics.nps.gov/templates.cfm (available only to computers on the NPS network). Templates and other large-print information are also at www.nps.gov/hfc/products/pubs/pubs-large-print.htm.

Rather than simply being enlargements of the original brochures, large-print editions represent a synthesis of the content that is tailored especially for their audience.

Text (large print size)

- **Fonts:** Making fonts accessible is more than choosing the right font. It is also the proper use of the font: size, line length, leading, letter and word spacing, color, contrast, etc.

  Use sans-serif fonts. The standard NPS sans-serif font is Adobe Frutiger Open Type. For more information, see www.graphics.nps.gov/typefaces.htm (available only to computers on the NPS network).

  The following organizations have done extensive research on fonts: American Printing House for the Blind, American Foundation for the Blind, and Lighthouse International. All three of these organizations recommend the use of sans-serif fonts for accessible large-print publications.

Do not use extremely **extended** or compressed fonts.

Do not use *italics* **or decorative** fonts.

- Some samples of **accessible fonts**:

  Sans-Serif: Frutiger 55 **and 65**
  Arial

- **Minimum Type Sizes:**
  Titles—55 point
  Introduction—28.5 point
  Body text—18 point
  Headings—22 point
  Captions—16 point

- **Leading:**
  Text—18 on 22 point
  Introduction—28.5 on 35 point
  Captions—16 on 20 point.

- Use a font with **proportional letterspacing,** like Frutiger.

- **Body text** shall be set in **Caps and Lowercase**.

- **Alignment** shall be flush left and rag right. Avoid justified text.

- Use **vertical lines** (1.5-point minimum) to separate text columns.

- **Gutter widths** shall be a minimum of 22 mm; **outside margins** may be smaller, but not less than 12 mm.

- **Do not hyphenate words at ends of lines** unless absolutely necessary to avoid extremely long or short lines. (It is better to rewrite the sentence.)

- **Avoid underlining**. If underlining is used, it shall not touch the underlined letters.

- Use **two letter spaces** between sentences, so that sentences have a visually distinct end and beginning.

- Use a **maximum of 41 to 46 characters** (average) per line of 18-point body text.

- **Paragraphs:** Use **one line space** open between paragraphs.

  Do not indent paragraphs.

- **Inks and toners** should be applied neither under-inked nor over-inked, for clear, crisp letterforms and image details.

- Do not print type over other **competing textures** (background, photos, graphics, etc.). Type printed over some solid tones is acceptable. (See "Publications Guidelines: Visual, Publications—Standard Print Size, Text, Contrast.")

Graphics (large print size)

- Photographs, diagrams, maps, etc. that accompany the text—should be enlarged accordingly, without distortion, loss of detail, contrast, focus, or clarity of image.

- **Photographs** may be color or black-and-white.

  A photograph's primary subject should **clearly contrast** with the surrounding content.

- **Line drawings** or floor plans should be clear and bold, with limited detail and a minimum type size of 16-point for labels.

Color (large print size)

- **Color Contrast**: For information, see "Effective Color Contrast" by Aries Arditi, Ph.D., at www.lighthouse.org/accessibility.

- **Color combinations** influence readability of text. Recommended color combinations include black/white, black/yellow, dark blue/white, dark green/white. Avoid yellow/grey, yellow/white, blue/green, red/green, and black/violet (courtesy of *Design Guidelines for Media Accessibility*, by Parks Canada).
-
- **Color blindness:** See "Publications Guidelines: Visual, Maps—Large Print."

Paper (large print size)

- **Surface** should reduce glare. Dull, coated white stock allows crisper letter forms.
- Paper should have **sufficient weight** to avoid "show-through" on pages printed on both sides.

Folds (large print size)

- **Fold configuration** should be as simple and easily understood as possible.
- Multi-page documents should have a **flexible binding** that allows the opened publication to lie flat.

Maps

Maps are an important component of orientation, wherever the orientation takes place—information desk, brochure, indoor or outdoor exhibits, or website. Some maps focus on important park features, while others provide topographical information. Still others give interpretive information. People with disabilities must receive the same benefit as people without disabilities.

Maps—Standard Print Size

- Avoid irrelevant information that adds clutter.
- **NPS maps** in digital formats are available at www.nps.gov/carto. The specifications for these maps may be obtained by downloading the Adobe Illustrator files and checking the attributes within the file.
- **Paper:** See "Publications Guidelines: Visual, Publications—Standard Print Size."
- **Contrast** of typeface to background shall be at least 70-percent. For an explanation, see "Exhibits Guidelines: Visual, Color and Contrast."

- **Proportional letterspacing:** See "Publications Guidelines: Visual, Publications—Standard Print Size."

- **Labels** shall be set in Caps and Lowercase except for large areas like oceans or mountain ranges.

  Pine Picnic Area

  PACIFIC OCEAN

- **Map notes** shall be set flush left and rag right.

  Little or **no hyphenation** shall be used at ends of lines.

  No compressed typefaces shall be used.

  E X T E N D E D typefaces shall be used only to identify large areas on the map.

  R O C K Y M O U N T A I N S

- **Fonts:** Use sans-serif, like Frutiger or Helvetica. A serif typeface may be used for specialized purposes such as providing a historic look.

Maps—Large Print Size

Produced primarily for visitors with low vision.

For a prototype large-print map, visit www.nps.gov/hfc/carto and select "Chesapeake and Ohio Canal National Historical Park" (CHOH). Compare to the standard print size. The specifications for these maps may be obtained by downloading the Adobe Illustrator files and checking the attributes within the file.

A template of an NPS large-print brochure and map is posted on the NPS Graphic Identity website, www.graphics.nps.gov/templates.cfm (available only to computers on the NPS network).

These specially designed large-print maps and brochures produced for C&O Canal were critiqued by low-vision specialists from several national organizations representing people with low vision. Many factors were considered including readability and functionality.

- **Color blindness**: People with color blindness cannot distinguish colors in the way that those with normal vision can. The condition is most commonly inherited. Red/green color blindness is by far the most common form of this condition.

  The large-print map for the C&O Canal brochure was also designed to accommodate red/green color blindness. This map can be a guide for the development of other park maps to solve the same problem.

  To see how a map or image appears to viewers with various forms of color blindness, visit www.vischeck.com (Windows) or http://colororacle.cartography.ch (Windows, Macintosh, and Linux).

Converting standard-print maps to large-print maps:

- **Background tone:** Avoid bright white; it creates excessive glare.

- **Critical information:** Use a ½-inch margin.

- **Focus:** Generalize and/or widen line weight or feature.

- **Line weights:** 3-point is preferred; 2-point is minimum.

- **Roads:** Consider which roads are truly needed for interpretive purposes. Avoid creating solely a "driving map."

  Use the map background color rather than white for the **road shield** background color to avoid glare.

- **Type**: Use a sans-serif font like Frutiger. For a heavier weight, use Frutiger Bold rather than Frutiger Black, which is too thick.

  For **state names**, use Roman font, 100-percent black instead of gray. State names may be placed in an open area, not necessarily along a state line.

For drainage labels, keep words together rather than spacing out too widely. Use 18-point type.

Use **en dash** in place of a regular hyphen.

Use **18-point**, 100-percent black, Caps and Lowercase type for most labels (Frutiger was used on the C&O map). Show type hierarchy by applying other styles such as larger, bolder, ALL CAPS (use only for large areas, like oceans and mountain ranges), color, etc.

- Mileage Markers:

  Use 15-point black type. This is a minor feature on the map. Do not use any type under 15-point.

  Add the label "milepost" to the highest and lowest milepost on the map. This makes it easier to distinguish the other milepost numbers. Also add the label "milepost" to the legend.

- **Symbols:** Limit symbols to just two or three. Use basic shapes (square, triangle, etc.) rather than the standard NPS pictograph figures.

- **Town circles:** Make all of these a uniform size.

- **Locator dots and squares:** increase their size.

- **State lines:** Use dashed lines, 70-percent black.

- Place a holding line (2-point) around the **legend**.

- Use a 2-point holding line for the distance measure **scale**.

- Use a simple **compass** rose to indicate "north" (and other directions).

- Numbers, symbols, letters, lines, etc. need a light background around them to stand out as a single feature. Do not place map objects adjacent to one another without space between them.

Tactile Maps

- There are many factors that make tactile maps accessible and functional for people who are blind, including size, depth, location, audio description, texturing, keys, legends, and degree of detail.

- Tactile maps may provide the primary information for people who are visually impaired, but they also benefit persons with cognitive disabilities, children, and all other visitors as they provide visual stimulation through their three-dimensional presentations.

- Raised-line or tactile maps can be made using our present digital files and, for example, a thermoform machine. Lines are distinguished by line weight, color, and height. Areas are distinguished by color, height, and texture. NPS digital maps are available at www.nps.gov/carto.

- Tactile maps are currently being developed by the NPS. Visit www.nps.gov/hfc/accessibility for more information on tactile maps.

Audio Formats

- Publications that are considered "readily available" shall be available in an audio format on CD or MP3 and the NPS individual park websites. Graphics shall be **audio described**.

  See "Publications" introduction about quantity and users being allowed to permanently keep the audio format.

- The audio version shall present **clear, high-quality sound**.

- All AV devices should enable users to **forward and reverse** throughout the entire program.

- The audio version shall be **sound-indexed** for easy choice of starting and stopping points for listening.

- Where possible, depending on the equipment used, **variable speech output speed** should be available.

For additional information, see "Appendix D: Alternative Media Formats."

Electronic (Word Processing) Formats

- Publications that are considered "readily available" shall be available in an electronic (word processing) format on CD and the NPS individual park websites. Graphics shall be **described**.

- Use Microsoft Word as the format. Microsoft Word includes accessibility attributes. Do not use columns or tables because these cannot be translated by computers.

  See "Reports" below. Also see "Publications" introduction about quantity and users being allowed to permanently keep the electronic format.

For additional information, see "Appendix D: Alternative Media Formats" and "Reports" below.

Braille

- Publications that are considered "readily available" shall be available in Contracted (Grade 2) Braille, and shall comply with ABAAS 703.3 and 703.4. See "Publications" introduction about quantity and users being allowed to permanently keep the Braille publication.

- Braille shall be produced in full conformance with the currently applicable codes set forth by the Braille Authority of North America (BANA). The BANA codebook is *English Braille, American Edition*. Use the latest edition. For more information, see www.brailleauthority.org.

- Do not use Jumbo Braille (large dot Braille).

- Do not combine large print and Braille in the same document.

- **Format:** Use 8.5 x 11-inch paper format for documents under 80 pages (printed on both sides of the paper). The older 11.5 x 11 format is too awkward and clumsy.

- **Interpoint:** The Braille should print on both sides of the paper to keep the bulk and price down.

- **Descriptions of graphics, including maps**: Like the audio format, the interpretive graphics need to be described in Braille for effective communication.

Use 50 words maximum for a single graphic.

Not every graphic has to be described. Choose the ones that add to the interpretation of the park.

Note: the graphic descriptions for the audio format and the graphic descriptions for the Braille format should be the same, thus helping the production cost.

- **Tactile graphics** enhance a sense of space, distance, area, size, and scale.

  Braille printing houses can advise which graphics can be made tactile. They have experience in this field and can provide cost estimates as well.

- More information on producing a Braille format, including transcribing, proof-reading, quality assurance, paper stock, bindings, and how many to print, will be available at www.nps.gov/hfc/products/pubs/pubs-braille.htm.

Reports

- Reports shall be **accessible** (electronic versions for people with visual impairments) for park employees and the public.

- **Plain text and HTML files** are the most likely to be accessible to all computer users who are blind. The electronic reader of the computer can read the content of the document to the user. The computer can only describe a graphic if an "alt tag" with a description is used. We recommend using Microsoft Word. Most people either use Microsoft Word or have methods to convert files.

- **Electronic readers** can best read the sans-serif font Arial without *italics*.

- **Other Specialized Formats:** The following is from *A Guide to Making Documents Accessible to People Who Are Blind or Visually Impaired* by Jennifer Sutton, published and copyrighted 2002 by the American Council of the Blind, www.acb.org/accessible-formats.html#ag16.

Adobe and Microsoft have made efforts to accommodate blind and visually impaired people who need to read documents generated by their specialized software. Companies' efforts to work with assistive technology vendors to resolve compatibility issues have been somewhat successful. Accessible documents in Microsoft's Reader format or in Adobe PDF must be constructed in very specific ways, be created with particular settings enabled, and generated in this file format. It is risky to assume that everyone can open a Microsoft Word document and follow guidelines that Adobe and Microsoft each outline. To get started with producing Adobe documents, see the booklet "How To Create Accessible Adobe PDF Files." For information about creating accessible Microsoft Reader® files, see " Microsoft Reader—Accessibility Frequently Asked Questions."

In addition to being sure that documents meet these criteria, a company should be aware that blind or visually impaired people must have technology that conforms to Microsoft's requirements, they must have downloaded Microsoft's Reader software, and they must have it configured to read accessible texts. In order to read Adobe's PDF documents, people must again have the most up-to-date assistive technology software, and they must install and configure the necessary Adobe plug-in. Even accessible documents in these formats do not always allow for maximum flexibility and user preferences with respect to reading, printing, or portability.

So, while these documents can and should be made available in a specialized format to those people who choose to use them in that format, offering another universally accessible document-type, such as HTML or plain text, is advisable. Though specialized formats allow the document to be read by sighted people exactly as intended, these formats are not nearly as useful and friendly to blind readers.

- Optical Character Recognition (OCR) software on scanners can interpret type, but not graphics. It is a tedious process and not an efficient way to read a document.

Where reports should be available:

- Reports shall be **posted online** for easy access.
- **NPS Media Inventory Database System (MIDS):** www.hfc.nps.gov/mids (available only to computers on the NPS network). Park staffs are responsible for posting reports to MIDS.
- **Park Websites:** www.nps.gov. Be aware that if there is copyrighted material in the report, it cannot be posted on a public site without permission from the copyright holder(s). Be sure to reference the artist/owner. If in doubt, post a version without the copyrighted material.

Publications Guidelines: Hearing

The park-produced **Accessibility Site Bulletin** and **newspaper** shall note the availability of programs that provide qualified sign language (and cued speech) interpretation, captioning, transcripts, and assistive listening devices. The publication should provide information on how to obtain these services. (See "Audiovisual Guidelines: Hearing/Ranger (Docent)-Led Tours" for the definition of "qualified interpreter.")

Publications Guidelines: Cognitive

- The park-produced **Accessibility Site Bulletin** and **newspaper** shall list programs available for visitors with cognitive disabilities.
- Text for visitors with cognitive disabilities is the same as for visitors without cognitive disabilities.
- Some people with dyslexia need audio rather than print material. (See "Exhibits Guidelines: Cognitive.")

9 Wayside Exhibits

Wayside exhibits are large-format outdoor sign-like exhibits that the National Park Service employs either to orient visitors arriving to a new location, or to reveal the stories hidden in the view. These panels combine photographs, artwork, diagrams or maps, and texts that are written to be easy to read aloud. The goal is both to describe the landscape and to reveal the significance of an outdoor place being preserved as part of the National Park System.

To make sense, waysides must be placed where a particular story intersects a particular view. Most NPS waysides are installed at trailheads, vistas, overlooks, or along front-country trails. Since NPS waysides are usually near sidewalks, hardened-surface trails, and parking areas, most are accessible to wheelchair users. But some waysides will be inaccessible to visitors with limited mobility, due to rough trail conditions and grades.

NPS managers and interpreters must constantly keep in mind that standard waysides provide little benefit to visitors who cannot see. Old-style audio message repeaters that the NPS formerly installed alongside waysides have not solved this problem because the hardware often fails outdoors. Audio technologies are emerging that can provide visitors who are blind or visually impaired access to the information that waysides deliver. While these guidelines may not specify the exact method, some method is required to make waysides accessible to visitors who are blind or visually impaired.

Because waysides are outdoors, color choices in panel design matter. Glare from sunlight must be avoided. Constant exposure to strong sunlight fogs and fades ink pigments so that lettering falls below legibility limits. Program accessibility is not just a matter of installing accessible waysides. Wayside exhibits are a prime example of an why an NPS program must be maintained in order for it to continue to be accessible. A regular inspection and panel replacement routine will keep waysides looking their best and solve many legibility problems.

Providing arriving visitors with basic orientation to an NPS site is a program; therefore it must be available to all visitors and delivered in an equitable fashion.

Good waysides should direct attention to the features they interpret, not to themselves. Writing should be focused and compressed. Way-

sides that work best avoid complex topics and multiple layers of information. Graphic elements must be organized to be powerful enough to draw visitors into the story.

For more information, visit www.nps.gov/hfc/products/waysides/way-process-access.htm. (See "NPS Wayside Exhibit Map Standards" and "NPS Wayside Exhibit Typographic Standards.")

Wayside Exhibits Guidelines: Mobility

- Wayside exhibits shall be installed at wheelchair-accessible locations wherever possible. (See "Exhibits Guidelines: Mobility.")
- Wayside exhibit panels shall be installed at heights and angles favorable for viewing by all visitors, including wheelchair users. For standard NPS low-profile exhibits (angled at 30 or 45 degrees) the recommended height is 32 inches from the bottom of the exhibit frame to finished grade; for upright exhibits and bulletin boards the height is 24–36 inches from the bottom of the exhibit frame to finished grade, depending on panel size.
- Trailhead exhibits shall include accessibility advisory information.
- Wayside exhibits shall have level, firm, hard-surfaced, and slip-resistant exhibit pads.
- Exhibit sites shall offer clear, unrestricted views of park features referred to in the exhibits.
- Park staff shall also consider posting wayside content (excluding copyrighted material) on the park website.

Wayside Exhibits Guidelines: Vision

- Exhibit typography shall be legible and readable and conform to the "NPS Wayside Exhibit Typographic Standards," www.nps.gov/hfc/products/waysides/way-pdfs.htm.
- Panel colors shall be selected to reduce eyestrain and glare and to provide excellent readability under field conditions. Because of its reflectivity, white shall not be used as a background color.
- Selected wayside exhibits shall incorporate tactile elements like models, texture blocks, and relief maps using raised lines, base relief, or three dimensional.

- Selected wayside exhibits shall incorporate audio stations that include audio description. (See "Exhibits Guidelines: Visual.")

- For all major features interpreted by graphic wayside exhibits, the park staff shall offer non-visual interpretation (i.e. audio description) of the same subject matter. Examples include audio tours like digital audio players, radio systems or dial-up messages for cellular phone users, and ranger talks.

- Park staff shall also consider posting wayside content on the park website. Be mindful of copyright restrictions.

Wayside Exhibits Guidelines: Hearing

- Wayside exhibit panels shall communicate visually and will rely heavily on graphics to interpret park resources.

- Other information in audio station messages (music, sound effects, etc.) shall be available in alternative formats: as part of the exhibit, transcript, captioning via a hand-held mobile device, or assistive listening systems via a hand-held T-coil compatible mobile device with headsets and neckloops available. Note: Hand-held devices require fewer repairs or replacements than built-in outdoor equipment. These devices must be available during all times when visitors can access the waysides and not just when visitor centers are open.

For more information see "Exhibits Guidelines: Hearing" and "Audio-visual Guidelines: Hearing."

Wayside Exhibits Guidelines: Cognitive

Text and narrations for visitors with cognitive disabilities are the same as for visitors without cognitive disabilities. There is no separate audio track.

- Text shall be concise, with short paragraphs.

For more information, see "Exhibits Guidelines: Cognitive."

10 Web-based Media

Web-based media are pages published on the Internet. The NPS uses them to give virtual visitors orientation and interpretive information about the national park programs and sites. Like publications and waysides, web pages combine photographs, artwork, diagrams, maps, and easy-to-read text.

All federal websites must comply with Section 508 of the *Rehabilitation Act of 1973*, as amended, chapter 1194.22, "Web-based intranet and internet information and applications" published by the Architectural and Transportation Barriers Compliance Board (December 21, 2000). Section 508 requires that individuals with disabilities, who are members of the public seeking information or services from a Federal agency, have access to and use of information and data comparable to that provided to the public who are not individuals with disabilities, unless an undue burden would be imposed on the agency.

Good web-based media should follow these principles of accessible website design:

- Design your website for use in the broadest possible range of web browsers. Consider the wide array of browsers, including Internet Explorer, Firefox, Opera, Safari, text only, and screen readers. There also are different versions of these browsers.

- Separate structure from presentation. Use HTML, XHTML, and XML for structure. Use CSS (Cascading Style Sheets) and XSL (Extensible Stylesheet Language) for style. Test your pages for proper structure and readability with the style sheets disabled. Avoid use of deprecated tags.

- In the HEAD of your HTML documents, use the right DOCTYPE: HTML 4.01 Transitional. Identify primary language: EN.

- Provide text alternatives to visual and audio content.

- Provide information that serves the same purpose as audio or visual media in ways suited to alternate sensory channels.

- Make language brief, clean, and simple. Write out abbreviations the first time they occur in a document.

- Provide clear and understandable navigation tools and orientation information. Use appropriate language for all your hyperlinks. Bad: "for a description of our program, click here." Good: "for a description of our program, please visit our program info page."

For more information, see www.section508.gov; "Web Accessibility Initiative," www.w3.org/WAI; and "Appendix A: Laws, Regulations, and Policies."

11 Promoting Accessibility

Building an audience takes time. Once a facility or program is accessible, promote it! Provide information on how to obtain these services. Also, include phone contact information for visitors with questions.

Using language to describe people with disabilities

- See *HFC Editorial Style Guide* at www.nps.gov/hfc (click "HFC Style Guide") and *Smithsonian Guidelines for Accessible Exhibition Design* at www.si.edu/opa/accessibility/exdesign/start.htm.

- Do not use "handicapped" or "the disabled"—put the person before the disability; use "persons with disabilities," "visitors with low vision," etc.

> The Longstocking Trail is accessible for persons with disabilities.
>
> The park has audio, video, and large-print tours available for persons with disabilities.
>
> The Pelican Trail is wheelchair-accessible.

Park Publications

The official park brochure, park newspaper and the like shall provide information as to where to find a list of services, explaine alternative formats and facilities available for persons with disabilities, and describe significant barriers. This should be prominently displayed in the publication.

Accessibility Site Bulletins

Each park shall produce a site bulletin on the topic of accessibility—what is accessible at the park. (See "Publications.")

Signage

Visitors need to know what accessible features are available. Post the appropriate accessibility symbols and information at the ticket and information desks, outside the theater, beside any appropriate exhibits or facility, etc.

Sign language interpreter name bars shall be worn by staff who are qualified. (See "Audiovisual Guidelines: Hearing/Ranger (Docent)-Led Tours" for the definition of "qualified interpreter.")

Promoting Accessibility

- Using **accessibility symbols** in mailings, advertisements, press releases, and the park website reinforces the accessibility signage at the park.

- Incorporate appropriate accessibility pictograph symbols on the park webpage to indicate what is accessible at the park site. Provide brief descriptions of the accessible features. (See "Appendix E.")

- **Education programs**: Make available a request form for accommodations needed.

- **Know your audience**: Identify local organizations and schools that focus on people with disabilities, like the Lions Club, schools for people with disabilities, veterans with disabilities groups, etc. Maintain contact with these groups to promote accessible programs.

- The phrases "**T-coil compatible**" and "**Headsets available"** or **"Headsets and Neckloops available**" should be included under the appropriate assistive listening systems symbol so visitors know what type of equipment is available. (See graphics below.)

T-coil compatible
Headsets available

Headsets and
Neckloops available

12 Training

Training NPS staff, volunteers, park partners, and others

- Develop a training guide for management, maintenance, repair, and distribution of accessibility programs and equipment for visitor use. A program must be maintained in order for it to continue to be accessible.

  This is especially important for sanitation reasons. For example, an outdoor wayside exhibit with tactile features needs to be cleaned frequently to get rid of bird droppings and other bacteria. Indoor tactile exhibits and other touchable media need to be cleaned too.

- Provide sensitivity training in accessibility issues. Be sure everyone knows basic courtesy and disability etiquette and current and correct terms for the equipment.

- Make sure that more than one person knows:

  Where the equipment and manuals are located.

  How to test the equipment before distributing it.

  How to explain the equipment to visitors.

  How to operate the various pieces of accessibility equipment—lifts, captioning boards, chargers for audio tour equipment, any displays that have interactive features, etc.

  What to do if something is not working.

  How to store, test, and maintain the equipment properly.

  How to use the TTY.-It should be in good working order if a visitor asks to use it.

- A good resource for training on accessibility and distribution of ALDs is: *Assistive Listening Devices for People with Hearing Loss: A Guide for Performing Arts Settings*, The Kennedy Center,

  www.kennedy-center.org/accessibility/guide_alds_KC.pdf

Appendix A: Laws, Regulations, and Policies

The National Park Service is committed to providing interpretive media that are accessible to all potential users. Media shall be planned, designed, fabricated, and installed consistent with the following laws, regulations, and policies that govern accessibility in interpretive media:

When there is a difference among the laws, policies, internal directives, etc., use the guideline that is more strict.

■ **Architectural Barriers Act of 1968 (ABA**)

Americans with Disabilities Act and Architectural Barriers Act Accessibility Guidelines (same as *Architectural Barriers Act Accessibility Standards*, **ABAAS**). Federal facilities must adhere to ABA Chapters 1–10. For more information, see www.access-board.gov/ada-aba/index.htm.

■ **Rehabilitation Act of 1973, as amended, Section 504**:

While the Architectural Barriers Act requires physical access to buildings and facilities, Section 504 requires program accessibility for all services provided with Federal dollars. This extends the scope of access to individuals with cognitive and sensory disabilities, in addition to those with mobility impairments. This requires that we have a broader understanding of the way various populations of individuals with disabilities receive and process information and the wide range of methods and techniques needed to ensure that we are effectively communicating with them. These methods and techniques include, but are not limited to, the use of qualified sign language interpreters (and cued speech), captions on audiovisual programs, assistive listening devices, readers for people with visual impairments, audio and Braille versions of printed information, and other advances such as computer technology.

Sec. 17.549 Program accessibility: Discrimination prohibited.

Except as otherwise provided in Sec. 17.550, no qualified handicapped person shall, because the agency's facilities are inaccessible to or unusable by handicapped persons, be denied the benefits of, be excluded from participation in, or otherwise be subjected to discrimination under any program or activity conducted by the agency.

Sec. 17.550 Program accessibility: Existing facilities.

(a) General. The agency shall operate each program or activity so that the program or activity, when viewed in its entirety, is readily accessible to and usable by handicapped persons. This paragraph does not–

(1) Necessarily require the agency to make each of its existing facilities or every part of a facility accessible to and usable by handicapped persons;

(2) In the case of historic preservation programs, require the agency to take any action that would result in a substantial impairment of significant historic features of an historic property; or

(3) Require the agency to take any action that it can demonstrate would result in a fundamental alteration in the nature of a program or activity or in undue financial and administrative burdens. In those circumstances where agency personnel believe that the proposed action would fundamentally alter the program or activity or would result in undue financial and administrative burdens, the agency has the burden of proving that compliance with Sec. 17.550 (a) would result in such an alteration or burdens. The decision that compliance would result in such alteration or burdens must be made by the agency head or his or her designee after considering all agency resources available for use in the funding and operation of the conducted program or activity, and must be accompanied by a written statement of the reasons for reaching that conclusion. If an action would result in such an alteration or such burdens, the agency shall take any other action that would not result in such an alteration or such burdens but would nevertheless ensure that handicapped persons receive the benefits and services of the program or activity.

(b) Methods–

(1) General. The agency may comply with the requirements of this section through such means as redesign of equipment, reassignment of services to accessible locations, assignment of aides to beneficiaries, home visits, delivery of services at alternate accessible sites, alteration of existing facilities and construction of new facilities, use of accessible rolling stock, or any other methods that result in making its programs or activities readily accessible to and usable by handicapped persons. The agency is not required to make structural changes in existing facilities where other methods are effective in achieving compliance with this section. The agency, in making alterations to existing buildings,

shall meet accessibility requirements to the extent compelled by the Architectural Barriers Act of 1968, as amended (42 U.S.C. 4151-4157) and any regulations implementing it. In choosing among available methods for meeting the requirements of this section, the agency shall give priority to those methods that offer programs and activities to qualified handicapped persons in the most integrated setting appropriate.

(2) Historic preservation programs. In meeting the requirements of paragraph (a) of this section in historic preservation programs, the agency shall give priority to methods that provide physical access to handicapped persons. In cases where a physical alteration to an historic property is not required because of paragraph (a)(2) or (a)(3) of this section, alternative, methods of achieving program accessibility include–

(i) Using audio-visual materials and devices to depict those portions of an historic property that cannot otherwise be made accessible.

(ii) Assigning persons to guide handicapped persons into or through portions of historic properties that cannot otherwise be made accessible; or

(iii) Adopting other innovative methods.

(3) Recreation programs. In meeting the requirements of paragraph (a) in recreation programs, the agency shall provide that the program or activity, when viewed in its entirety, is readily accessible to and usable by handicapped persons. When it is not reasonable to alter natural and physical features, accessibility may be achieved by alternative methods as noted in paragraph (b)(1) of this section.

(c) Time period for compliance. The agency shall comply with the obligations established under this section within sixty (60) days of the effective date of this part except that where structural changes in facilities are necessary, such changes shall be made within three years of the effective date of this part, but in any event as expeditiously as possible.

(d) Transition plan. In the event that structural changes to facilities are necessary to achieve program accessibility, the agency shall develop, within six months of the effective date of this part, a transition plan setting forth the steps necessary to complete such changes. The plan shall be developed with the assistance of interested persons, including handicapped persons or organiza-

tions representing handicapped persons. A copy of the transition plan shall be made available for public inspection. The plan shall, at a minimum–

(1) Identify physical obstacles in the agency's facilities that limit the accessibility of its programs or activities to handicapped persons;

(2) Describe in detail the methods that will be used to make the facilities accessible;

(3) Specify the schedule for taking the steps necessary to achieve compliance with this section and, if the time period of the transition plan is longer than one year, identify steps that will be taken during each year of the transition period;

(4) Indicate the official responsible for implementation of the plan; and

(5) Identify the persons or groups with whose assistance the plan was prepared.

Sec. 17.551 Program accessibility: New construction and alterations.

Each building or part of a building that is constructed or altered by, on behalf of, or for the use of the agency shall be designed, constructed, or altered so as to be readily accessible to and usable by handicapped persons. The definitions, requirements, and standards of the *Architectural Barriers Act* (42 U.S.C. 4151-4157) as established in 41 CFR 101-19.600 to 101-19.607 apply to buildings covered by this section.

Sec. 17.552-17.559 [Reserved]

Sec. 17.560 Communications.

(a) The agency shall take appropriate steps to ensure effective communication with applicants, participants, personnel of other Federal entities, and members of the public.

(1) The agency shall furnish appropriate auxiliary aids where necessary to afford a handicapped person an equal opportunity to participate in, and enjoy the benefits of, a program or activity conducted by the agency.

(i) In determining what type of auxiliary aid is necessary, the

agency shall give primary consideration to the requests of the handicapped person.

(ii) The agency need not provide individually prescribed devices, readers for personal use or study, attendant services, or other devices of a personal nature.

(2) Where the agency communicate with applicants and beneficiaries by telephone, telecommunications devices for deaf persons (TDD's) or equally effective telecommunication systems shall be used.

(b) The agency shall ensure that interested persons, including persons with impaired vision or hearing, can obtain information as to the existence and location of accessible services, activities, and facilities.

(c) The agency shall provide signage at a primary entrance to each of its inaccessible facilities, directing users to a location at which they can obtain information about accessible facilities. The international symbol for accessibility shall be used at each primary entrance of an accessible facility.

(d) This section does not require the agency to take any action that it can demonstrate would result in a fundamental alteration in the nature of a program or activity or in undue financial and administrative burdens. In those circumstances where agency personnel believe that the proposed action would fundamentally alter the program or activity or would result in undue financial and administrative burdens, the agency has the burden of proving that compliance with Sec. 17.560 would result in such alteration or burdens. The decision that compliance would result in such alteration or burdens must be made by the agency head or his or her designee after considering all agency resources available for use in the funding and operation of the conducted program or activity, and must be accompanied by a written statement of the reasons for reaching that conclusion. If an action required to comply with this section would result in such alteration or such burdens, the agency shall take any other action that would not result in such an alteration or such burdens but would nevertheless ensure that, to the maximum extent possible, handicapped persons receive the benefits and services of the program or activity.

For the Department of the Interior's Section 504—Subpart E—Enforcement of Nondiscrimination on the Basis of Handicap in Programs or Activities Conducted by the Department of the Interior in its entirety, visit www.nps.gov/hfc/accessibility.

■ **Rehabilitation Act of 1973, as amended, Section 508**: (official since December 2000)

> Section 508 of the Rehabilitation Act of 1973, as amended, requires that all Federal agencies ensure that when they develop, procure, maintain, or use electronic and information technology, it is accessible to employees with disabilities. It also requires that individuals with disabilities who are seeking information or services from Federal agencies have access to and use of all information provided. Electronic and information technology is expansively defined. It includes computers (such as hardware, software, and accessible data such as web pages), facsimile machines, copiers, telephones, and other equipment used for transmitting, receiving, using, or storing information.
>
> Section 508 of the Rehabilitation Act of 1973, as amended, applies specifically to web-based media, audio tours, audiovisual programs, and other media incorporating these electronic elements.

The following is an excerpt from the *Electronic and Information Technology Accessibility Standards Architectural and Transportation Barriers Compliance Board* [*36CFR Part 1194* published in the *Federal Register* on December 21, 2000]:

> § 1194.22 Web-based intranet and internet information and applications.
> (a) A text equivalent for every non-text element shall be provided (e.g., via "alt", "longdesc", or in element content).
>
> (b) Equivalent alternatives for any multimedia presentation shall be synchronized with the presentation.
>
> (c) Web pages shall be designed so that all information conveyed with color is also available without color, for example from context or markup.
>
> (d) Documents shall be organized so they are readable without requiring an associated style sheet.
>
> (e) Redundant text links shall be provided for each active region of a server-side image map.
>
> (f) Client-side image maps shall be provided instead of server-side image maps except where the regions cannot be defined with an available geometric shape.
> (g) Row and column headers shall be identified for data tables.

(h) Markup shall be used to associate data cells and header cells for data tables that have two or more logical levels of row or column headers.

(i) Frames shall be titled with text that facilitates frame identification and navigation.

(j) Pages shall be designed to avoid causing the screen to flicker with a frequency greater than 2 Hz and lower than 55 Hz.

(k) A text-only page, with equivalent information or functionality, shall be provided to make a web site comply with the provisions of this part, when compliance cannot be accomplished in any other way. The content of the text-only page shall be updated whenever the primary page changes.

(l) When pages utilize scripting languages to display content, or to create interface elements, the information provided by the script shall be identified with functional text that can be read by assistive technology.

(m) When a web page requires that an applet, plug-in or other application be present on the client system to interpret page content, the page must provide a link to a plug-in or applet that complies with §1194.21(a) through (l).

(n) When electronic forms are designed to be completed on-line, the form shall allow people using assistive technology to access the information, field elements, and functionality required for completion and submission of the form, including all directions and cues.

(o) A method shall be provided that permits users to skip repetitive navigation links.

(p) When a timed response is required, the user shall be alerted and given sufficient time to indicate more time is required.

§ 1194.24 Video and multimedia products.

(a) All analog television displays 13 inches and larger, and computer equipment that includes analog television receiver or display circuitry, shall be equipped with caption decoder circuitry which appropriately receives, decodes, and displays closed captions from broadcast, cable, videotape, and DVD signals. As soon as practicable, but not later than July 1, 2002, widescreen digital television (DTV) displays measuring at least 7.8 inches

vertically, DTV sets with conventional displays measuring at least 13 inches vertically, and stand-alone DTV tuners, whether or not they are marketed with display screens, and computer equipment that includes DTV receiver or display circuitry, shall be equipped with caption decoder circuitry which appropriately receives, decodes, and displays closed captions from broadcast, cable, videotape, and DVD signals.

(b) Television tuners, including tuner cards for use in computers, shall be equipped with secondary audio program playback circuitry.

(c) All training and informational video and multimedia productions which support the agency's mission, regardless of format, that contain speech or other audio information necessary for the comprehension of the content, shall be open or closed captioned.

(d) All training and informational video and multimedia productions which support the agency's mission, regardless of format, that contain visual information necessary for the comprehension of the content, shall be audio described.

(e) Display or presentation of alternate text presentation or audio descriptions shall be user-selectable unless permanent.

§ 1194.25 Self contained closed products.

(a) Self contained products shall be usable by people with disabilities without requiring an end-user to attach assistive technology to the product. Personal headsets for private listening are not assistive technology.

(b) When a timed response is required, the user shall be alerted and given sufficient time to indicate more time is required.

(c) Where a product utilizes touchscreens or contact-sensitive controls, an input method shall be provided that complies with §1194.23 (k) (1) through (4).

(d) When biometric forms of user identification or control are used, an alternative form of identification or activation, which does not require the user to possess particular biological characteristics, shall also be provided.

(e) When products provide auditory output, the audio signal shall be provided at a standard signal level through an industry standard connector that will allow for private listening. The product

must provide the ability to interrupt, pause, and restart the audio at anytime.

(f) When products deliver voice output in a public area, incremental volume control shall be provided with output amplification up to a level of at least 65 dB. Where the ambient noise level of the environment is above 45 dB, a volume gain of at least 20 dB above the ambient level shall be user selectable. A function shall be provided to automatically reset the volume to the default level after every use.

(g) Color coding shall not be used as the only means of conveying information, indicating an action, prompting a response, or distinguishing a visual element.

(h) When a product permits a user to adjust color and contrast settings, a range of color selections capable of producing a variety of contrast levels shall be provided.

(i) Products shall be designed to avoid causing the screen to flicker with a frequency greater than 2 Hz and lower than 55 Hz.

(j) Products which are freestanding, non-portable, and intended to be used in one location and which have operable controls shall comply with the following:

(1) The position of any operable control shall be determined with respect to a vertical plane, which is 48 inches in length, centered on the operable control, and at the maximum protrusion of the product within the 48 inch length (see Figure 1 of this part).

(2) Where any operable control is 10 inches or less behind the reference plane, the height shall be 54 inches maximum and 15 inches minimum above the floor.

(3) Where any operable control is more than 10 inches and not more than 24 inches behind the reference plane, the height shall be 46 inches maximum and 15 inches minimum above the floor.

(4) Operable controls shall not be more than 24 inches behind the reference plane (see Figure 2 of this part).

For more information, visit www.section508.gov.

Denver Service Center (NPS)

- **Design Standards** (includes codes (building, electrical, etc.) and other legal requirements)
  http://workflow.den.nps.gov/staging/6_Design/Designstandards/DesignStds_access_section.htm

Department of the Interior

- **Civil Rights Directive No. 2008-05: Open Captioning of Audio-Visual Media**
  www.nps.gov/hfc/accessibility

National Park Service

- **Director's Order 16A: Reasonable Accommodation for Applications and Employees with Disabilities**
  www.nps.gov/policy/DOrders/DOrder16a.html
  (available only to computers on the NPS network)

- **Director's Order 42: Accessibility for Visitors with Disabilities in National Park Service Programs and Services**
  www.nps.gov/policy/DOrders/DOrder42.html
  (available only to computers on the NPS network)

- **Management Policies 2006: A Guide to Managing the National Park System**
  www.nps.gov/policy/mp/Index2006.htm
  (available only to computers on the NPS network)

- **Director's Memorandum: Audio-Visual Accessibility Initiative for Visitors with Disabilities (dated October 20, 2006)**
  www.nps.gov/hfc/accessibility

- **Director's Memorandum: Disability Access in the National Park Service (dated October 24, 2006)**
  www.nps.gov/hfc/accessibility

Appendix B: Accessibility Resources

Federal Government

Harpers Ferry Center—Accessibility
Includes updates for these Guidelines, DOI Section 504, photographs of best practices, and more.
www.nps.gov/hfc/accessibility

Harpers Ferry Center Editorial Style Guide
www.nps.gov/hfc (click "HFC Style Guide")

NPS Accessibility Management
http://inside.nps.gov/waso/waso.cfm?prg=151&lv=3
(available only to computers on the NPS network)

NPS Graphic Identity Program
Includes fonts, templates for Accessibility Site Bulletin and large-print brochures and maps, and more.
www.graphics.nps.gov
(available only to computers on the NPS network)

Denver Service Center Design Standards (NPS)
Includes codes (building, electrical, etc.) and other legal requirements.
http://workflow.den.nps.gov/staging/6_Design/Designstandards/DesignStds_access_section.htm

Department of the Interior
www.doi.gov/accessibility.html

Department of the Interior Accessibility Technology Center
www.doi.gov/atc/index.html
www.doi.gov/atc/architectural.html
www.doi.gov/atc/atalist.html#hear (list of assistive technology accommodations)

DisabilityInfo.gov
www.disabilityinfo.gov

Federal Communications Commission
www.fcc.gov/cgb

National Library Service for the Blind and Physically Handicapped (NLS)-part of the Library of Congress
www.loc.gov/nls

National Endowment for the Arts
www.nea.gov/resources/Accessibility/index.html

United States Access Board
www.access-board.gov

Other Organizations

General

The Center for Universal Design: Environments and Products for All People, North Carolina State University (includes the *Principles of Universal Design*)
www.design.ncsu.edu/cud

The Disabled Traveler's Companion
www.tdtcompanion.com

The Kennedy Center
www.kennedy-center.org/accessibility

National Center on Accessibility
www.ncaonline.org

Parks Canada
Design for Media Accessibility (publication)

Smithsonian Institution
www.si.edu/opa/accessibility/exdesign/start.htm

Society for Environmental Graphic Design
www.segd.org

Web Accessibility Initiative (WAI)
www.w3.org/WAI

Hearing

Alexander Graham Bell Association for the Deaf and Hard of Hearing
www.agbell.org

***Assistive Listening Devices for People with Hearing Loss: A Guide for Performing Arts Settings*, The Kennedy Center**
www.kennedy-center.org/accessibility/guide_alds_KC.pdf

Center for Hearing and Communication (formerly League for the Hard of Hearing)
www.lhh.org

Hearing Access Program
e-mail jschacter@nyc.rr.com

Hearing Loss Association of America
www.hearingloss.org

National Association of the Deaf
www.nad.org

Telecommunications for the Deaf and Hard of Hearing
www.tdi-online.org

Vision

American Foundation for the Blind
www.afb.org

American Printing House for the Blind (APH)
www.aph.org

Art Beyond Sight
www.artbeyondsight.org

Baruch College, Tactile and Large-Print Maps
www.baruch.cuny.edu/ccvip/tactual_maps.html

Braille Authority of North America (BANA)
Includes Braille codes used by the NPS, *English Braille, American Edition*.
www.brailleauthority.org

Braille through Remote Learning (BRL)
Includes BRL: Contraction Lookup Dictionary
www.brl.org/refdesk/conlookup.html

Color Oracle (simulates color-blind vision)
http://colororacle.cartography.ch

Lighthouse International
www.lighthouse.org

National Association for Visually Handicapped
www.navh.org

Vischeck (simulates color-blind vision)
www.vischeck.com

Cognitive

American Association on Intellectual and Developmental Disabilities (AAIDD)
www.aaidd.org

Appendix C: The Principles of Universal Design

Version 2.0—April 1, 1997
Major funding provided by: The National Institute on Disability and Rehabilitation Research, U.S. Department of Education. Copyright 1997 North Carolina State University, The Center for Universal Design.

The authors, a working group of architects, product designers, engineers, and environmental design researchers, collaborated to establish the following Principles of Universal Design to guide a wide range of design disciplines including environments, products, and communications.

These seven principles may be applied to evaluate existing designs, guide the design process. and educate both designers and consumers about the characteristics of more usable products and environments. The Principles of Universal Design are presented here, in the following format: name of the principle, intended to be a concise and easily remembered statement of the key concept embodied in the principle; definition of the principle, a brief description of the principle's primary directive for design; and guidelines, a list of the key elements that should be present in a design which adheres to the principle. (Note: all guidelines may not be relevant to all designs.)

Definition of Universal Design: The design of products and environments to be usable by all people, to the greatest extent possible, without the need for adaptation or specialized design.

Principle 1: Equitable Use

The design is useful and marketable to people with diverse abilities.
Guidelines:

1a. Provide the same means of use for all users: identical whenever possible; equivalent when not.

1b. Avoid segregating or stigmatizing any users.

1c. Provisions for privacy, security, and safety should be equally available to all users.

1d. Make the design appealing to all users.

Principle 2: Flexibility in Use

The design accommodates a wide range of individual preferences and abilities. Guidelines:

2a. Provide choice in methods of use.

2b. Accommodate right- or left-handed access and use.

2c. Facilitate the user's accuracy and precision.

2d. Provide adaptability to the user's pace.

Principle 3: Simple and Intuitive Use

Use of the design is easy to understand, regardless of the user's experience, knowledge, language skills, or current concentration level. Guidelines:

3a. Eliminate unnecessary complexity.

3b. Be consistent with user expectations and intuition.

3c. Accommodate a wide range of literacy and language skills.

3d. Arrange information consistent with its importance.

3e. Provide effective prompting and feedback during and after task completion.

Principle 4: Perceptible Information

The design communicates necessary information effectively to the user, regardless of ambient conditions or the user's sensory abilities. Guidelines:

4a. Use different modes (pictorial, verbal, tactile) for redundant presentation of essential information.

4b. Provide adequate contrast between essential information and its surroundings.

4c. Maximize "legibility" of essential information.

4d. Differentiate elements in ways that can be described (i.e., make it easy to give instructions or directions).

4e. Provide compatibility with a variety of techniques or devices used by people with sensory limitations.

Principle 5: Tolerance for Error

The design minimizes hazards and the adverse consequences of accidental or unintended actions. Guidelines:

5a. Arrange elements to minimize hazards and errors: most used elements, most accessible; hazardous elements eliminated, isolated, or shielded.

5b. Provide warnings of hazards and errors.

5c. Provide fail safe features.

5d. Discourage unconscious action in tasks that require vigilance.

Principle 6: Low Physical Effort

The design can be used efficiently and comfortably and with a minimum of fatigue. Guidelines:

6a. Allow user to maintain a neutral body position.

6b. Use reasonable operating forces.

6c. Minimize repetitive actions.

6d. Minimize sustained physical effort.

Principle 7: Size and Space for Approach and Use

Appropriate size and space is provided for approach, reach, manipulation, and use regardless of user's body size, posture, or mobility. Guidelines:

7a. Provide a clear line of sight to important elements for any seated or standing user.

7b. Make reach to all components comfortable for any seated or standing user.

7c. Accommodate variations in hand and grip size.

7d. Provide adequate space for the use of assistive devices or personal assistance.

Please note that the Principles of Universal Design address only universally usable design, while the practice of design involves more than consideration for usability. Designers must also incorporate other considerations such as economic, engineering, cultural, gender, and environmental concerns in their design processes. These Principles offer designers guidance to better integrate features that meet the needs of as many users as possible.

Appendix D: Alternative Media Formats

Many accessibility challenges can be addressed by providing interpretive information in multiple formats to accommodate specific audiences. A word of caution: the presentation must be equal to the quantity and quality of the original on which it is based so as to provide an equitable experience for the user.

When purchasing software or hardware that will interface with an interpretive exhibit, the process of purchasing must adhere to all requirements identified in section 508 of the *Rehabilitation Act of 1973*, as amended.

Alternative formats include, but are not limited to:

- For physically inaccessible places, for example an exhibit of crucial interpretive significance on the second floor of a historic building that cannot be altered to provide access, a method of alternate accommodation of equal quality shall be provided, such as photographic, video, audio, or web-based program/tours, visual aids, tactile reproductions, dioramas, audio description, photo albums, personal services, etc.

- Computer interactive programs.

- Audio and video podcasts or downloadable files.

- Interactive web features.

- Real-time video viewing.

- Large-print publications, maps, audio tours, transcripts, etc.

- Red-green color-blind sensitive publications, maps, design, and type.

  The ability to change color preferences, for people that have color blindness, is available on some media equipment.

-

- Audio descriptions of graphic, video, and exhibit content, including audio description tours.

- Electronic (word processing) formats (available on CD and web).

  Plain text files for use with electronic readers, portable scanners, and other assistive devices.

- Contracted (Grade 2) Braille publications, exhibit labels, and interactive devices.

- Tactile maps, graphics, and models.

- Film scripts: standard and large-print size formats.
  Note: scripts are not an alternative format, but are required.

- On-screen captions.

- Assistive listening systems:

  Transmitters: Radio frequency (FM), infrared (IR), and induction loops.

  Coupling devices: Headsets, handsets (examples: audio sticks, sound sticks, and telephone receivers), and neckloops.

  Receivers: Radio frequency (FM), infrared (IR), and T-coils.

Appendix E: NPS Accessibility Pictograph Symbols

Wheelchair-accessible

Closed captioning (CC)

Open captioning (OC)

Volume control telephone

Text Telephone service (TTY)

Assistive listening systems

Assistive listening systems
T-coil compatible

Sign language interpretation

Large print/transcript

Braille

Low vision access

Audio description

Live audio description

Download symbols at www.nps.gov/hfc/carto/map-symbols.htm.

Acknowledgements

To the endless list of people who helped create these guidelines–government workers, quasi-government workers, non-profit workers, websites creators, and anyone else who helped directly or indirectly—thank you.

American Foundation for the Blind

American Printing House for the Blind/Elaine Kitchel

Arizona State University Libraries

Braille Authority of North America

Braille through Remote Learning

California State Parks

The Center for Universal Design: Environments and Products for All People, North Carolina State University

Federal Communications Commission

The Hearing Access Program/Janice Schacter

The Kennedy Center

National Library Service for the Blind and Physically Handicapped

Lighthouse International/Aries Arditi

National Association for Visually Handicapped

National Center on Accessibility

National Endowment for the Arts

Parks Canada

Smithsonian Institution

Society for Environmental Graphic Design

United States Access Board

United States Department of Justice

Web Accessibility Initiative