APPENDIX VI

Third draft Wayfinding Plan from Corbin Design

Project: Dayton Aviation Heritage National Historic Park Sites

Final 02.14.03

Sign Message Schedule
Design Intent Drawings

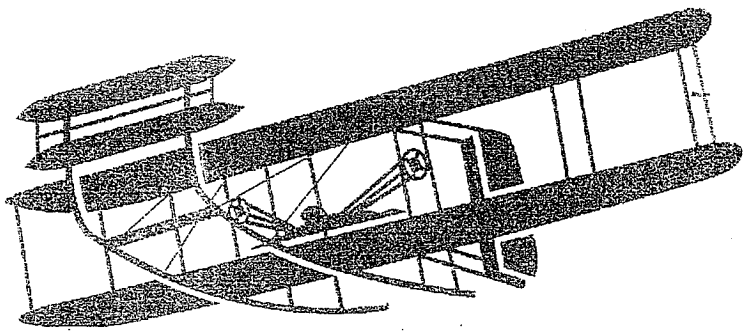

Prepared by:

corbin

109 East Front 304
Traverse City, MI 49684
231 947.1236

Sign No.	Sign Type	Photo Link	Sign Copy
01	-DV1- Vehicular Directional (lg)	Refer to sign location plan for recommended sign location. No Photo available.	↑ Dunbar House State Memorial [NPS sym] ↑ Wright Cycle Co. [NPS sym]
	Sign Face Direction	**Additional Commentary**	
	West	at James H. McGee Blvd and Third St. intersection	

Sign No.	Sign Type	Photo Link	Sign Copy
01P	-IP- Parking Identifier	Refer to sign location plan for recommended sign location. See Photo 01P.	→ Dunbar House [NPS sym] [Parking sym]
	Sign Face Direction	**Additional Commentary**	
	South	on Paul Dunbar St. between 1st and 2nd Streets	

Sign No.	Sign Type	Photo Link	Sign Copy
02	-DV1- Vehicular Directional (lg)	Refer to sign location plan for recommended sign location. See Photo 02.	← Dunbar House State Memorial [NPS sym] ↑ Wright Cycle Co. [NPS sym]
	Sign Face Direction	**Additional Commentary**	
	West	on Third St. between Euclid Ave. and Paul Lawrence Dunbar St.	

Sign No.	Sign Type	Photo Link	Sign Copy
03	-DV1- Vehicular Directional (lg)	Refer to sign location plan for recommended sign location. See Photo 03.	→ Dunbar House State Memorial [NPS sym]
	Sign Face Direction East	**Additional Commentary** on Third St. between Paul Lawrence Dunbar St. and Conover	

Sign No.	Sign Type	Photo Link	Sign Copy
04	-DV2- Vehicular Directional (sm)	Refer to sign location plan for recommended sign location. See Photo 04.	→ Aviation Trail Visitor Center → Wright Cycle Co. [NPS sym] → Wright-Dunbar Visitor Center [NPS sym]
	Sign Face Direction West	**Additional Commentary** on Third Street between Broadway and Williams	

Sign No.	Sign Type	Photo Link	Sign Copy
05	-DV2- Vehicular Directional (sm)	Refer to sign location plan for recommended sign location. See Photo 05.	← Dunbar House State Memorial [NPS sym] → Wright Brothers Aviation Center [NPS sym]
	Sign Face Direction South	**Additional Commentary** on Williams Street between Third and Fourth Street	

Sign No.	Sign Type	Photo Link	Sign Copy
06	-DV2- Vehicular Directional (sm)	Refer to sign location plan for recommended sign location. See Photo 06.	← Aviation Trail Visitor Center ← Wright-Dunbar Visitor Center [NPS sym] ← Wright Cycle Co. [NPS sym]
	Sign Face Direction	Additional Commentary	
	East	on Third Street between Williams and Shannon Streets	

Sign No.	Sign Type	Photo Link	Sign Copy
07	-DV1- Vehicular Directional (lg)	Refer to sign location plan for recommended sign location. See Photo 07.	→ Wright Brothers Aviation Center [NPS sym] [0.0mi] ↑ U.S. Air Force Museum [0.0 mi]
	Sign Face Direction	Additional Commentary	
	West	on Third Street between Horace Ave. and Edwin C. Moses Blvd.	

Sign No.	Sign Type	Photo Link	Sign Copy
08	-DV1- Vehicular Directional (lg)	Refer to sign location plan for recommended sign location. See Photo 08.	← Dunbar House State Memorial [NPS sym] ← Wright Cycle Co. [NPS sym] → U.S. Air Force Museum [0.0 mi]
	Sign Face Direction	Additional Commentary	
	South	on Edwin C. Moses Blvd. between Third St. and Fourth St.	

Sign No.	Sign Type	Photo Link	Sign Copy
09	-DV1- Vehicular Directional (lg)	Refer to sign location plan for recommended sign location. See Photo 09.	← Wright Brothers Aviation Center [NPS sym]
	Sign Face Direction	**Additional Commentary**	
	North	on Edwin C. Moses Blvd. just north of Stewart	

Sign No.	Sign Type	Photo Link	Sign Copy
10	-DV1- Vehicular Directional (lg)	Refer to sign location plan for recommended sign location. See Photo 10.	→ Dunbar House State Memorial [NPS sym] → Wright Cycle Co. [NPS sym]
	Sign Face Direction	**Additional Commentary**	
	East	on the bridge between Edwin C. Moses Blvd and Stewart	

Sign No.	Sign Type	Photo Link	Sign Copy
11	-DV1- Vehicular Directional (lg)	Refer to sign location plan for recommended sign location. See Photo 11.	→ Wright Brothers Aviation Center [NPS sym]
	Sign Face Direction	**Additional Commentary**	
	West	on the bridge at the intersection of Stewart and Patterson	

Sign No.	Sign Type	Photo Link	Sign Copy
12	-DV1- Vehicular Directional (lg)	Refer to sign location plan for recommended sign location. See Photo 12.	← Wright Cycle Co. [NPS sym] [0.0 mi] ↑ National Aviation Hall of Fame [0.0 mi] ↑ U.S. Air Force Museum [0.0 mi]
	Sign Face Direction	**Additional Commentary**	
	South	on Carillon Blvd between River Park Dr. and Stewart	

Sign No.	Sign Type	Photo Link	Sign Copy
13	-DV1- Vehicular Directional (lg)	Refer to sign location plan for recommended sign location. See Photo 13.	→ Wright Brothers Aviation Center [NPS sym]
	Sign Face Direction	**Additional Commentary**	
	North Face	on Carillon Blvd. just north of Patterson	

Sign No.	Sign Type	Photo Link	Sign Copy
14	-DV1- Vehicular Directional (lg)	Refer to sign location plan for recommended sign location. See Photo 14.	← National Aviation Hall of Fame [0.0 mi] ← U.S. Air Force Museum [0.0 mi] ← Wright Cycle Co. [NPS sym] [0.0 mi]
	Sign Face Direction	**Additional Commentary**	
	West	on Carillon Blvd. just South of Patterson	

Sign No.	Sign Type	Photo Link	Sign Copy
15	-DV1- Vehicular Directional (lg)	Refer to sign location plan for recommended sign location. See Photo 15.	← Wright Brothers Aviation Center [NPS sym]
	Sign Face Direction	**Additional Commentary**	
	Northeast	on Carillon Blvd. just north of Park entrance	

Sign No.	Sign Type	Photo Link	Sign Copy
16	-DV1- Vehicular Directional (lg)	Refer to sign location plan for recommended sign location. See Photo 16.	↑ Huffman Prairie Flying Field Visitor Center [NPS sym] ↑ National Aviation Hall of Fame ↑ U.S. Air Force Museum
	Sign Face Direction	**Additional Commentary**	
	South	on Patterson under the SR-35 overpass	

Sign No.	Sign Type	Photo Link	Sign Copy
17	-DV1- Vehicular Directional (lg)	Refer to sign location plan for recommended sign location. See Photo 17.	→ Huffman Prairie Flying Field Visitor Center [NPS sym] [0.0 mi] → National Aviation Hall of Fame [0.0 mi] → U.S. Air Force Museum [0.0 mi]
	Sign Face Direction	**Additional Commentary**	
	South	on Patterson between Third and Fourth Street	

Sign No.	Sign Type	Photo Link	Sign Copy
18	-DV1- Vehicular Directional (lg)	Refer to sign location plan for recommended sign location. See Photo 18.	← Wright B rothers Aviation Center [NPS sym] [0.0 mi] ↑ Dunbar House State Memorial [NPS sym] [0.0 mi] ↑ Wright Cycle Co. [NPS sym] [0.0 mi]
	Sign Face Direction	**Additional Commentary**	
	East	on Third Street between Patterson and St. Clair	

Sign No.	Sign Type	Photo Link	Sign Copy
19	-DV1- Vehicular Directional (lg)	Refer to sign location plan for recommended sign location. See Photo 19.	↖ Dunbar House State Memorial [NPS sym] ↖ Wright Brothers Aviation Center [NPS sym]
	Sign Face Direction	**Additional Commentary**	
	East	on island at first left after IR-75 southbound exit	

Sign No.	Sign Type	Photo Link	Sign Copy
20	-DV1- Vehicular Directional (lg)	Refer to sign location plan for recommended sign location. See Photo 20.	→ Wright Cycle Co. [NPS sym] → Wright-Dunbar Visitor Center [NPS sym] → Dunbar House State Memorial [NPS]
	Sign Face Direction	**Additional Commentary**	
	North	on Second St. just before Robert Drive intersection	

Sign No.	Sign Type	Photo Link	Sign Copy
21	-DV1- Vehicular Directional (lg)	Refer to sign location plan for recommended sign location. See Photo 21.	← Dunbar House State Memorial [NPS sym] ← Wright Brothers Aviation Center [NPS sym]
	Sign Face Direction	**Additional Commentary**	
	South	on IR-75 northbound exit ramp just before Third Street	

Sign No.	Sign Type	Photo Link	Sign Copy
22	-DV2- Vehicular Directional (sm)	Refer to sign location plan for recommended sign location. See Photo 22.	↑ National Aviation Hall of Fame [0.0 mi] ↑ U.S. Air Force Museum [0.0 mi]
	Sign Face Direction	**Additional Commentary**	
	West	on Third Street between Huffman and Linden Ave.	

Sign No.	Sign Type	Photo Link	Sign Copy
23	-DV1- Vehicular Directional (lg)	Refer to sign location plan for recommended sign location. See Photo 23.	↖ National Aviation Hall of Fame ↖ U.S. Air Force Museum
	Sign Face Direction	**Additional Commentary**	
	West	on Third Street at Linden Ave. Intersection	

Sign No.	Sign Type	Photo Link	Sign Copy
24	-DV1- Vehicular Directional (lg)	Refer to sign location plan for recommended sign location. See Photo 24.	↗ Dunbar House State Memorial [NPS sym] ↗ Wright Brothers Aviation Center [NPS sym] ↗ Wright Cycle Co. [NPS sym]
	Sign Face Direction	**Additional Commentary**	
	East	on Springfield Pike east of Third Street intersection	

Sign No.	Sign Type	Photo Link	Sign Copy
24a	-DV1- Vehicular Directional (lg)	Refer to sign location plan for recommended sign location. No photo available.	↑ Dunbar House State Memorial [NPS sym] [0.0 mi] ↑ Wright Brothers Aviation Center [NPS sym] [0.0 mi] ↑ Wright Cycle Co. [NPS sym] [0.0 mi]
	Sign Face Direction	**Additional Commentary**	
	West Face	on Springfield Pike east of First Street intersection	

Sign No.	Sign Type	Photo Link	Sign Copy
25	-DV1- Vehicular Directional (lg)	Refer to sign location plan for recommended sign location. See Photo 25.	NOT FOR FABRICATION !!!-ODOT SIGNAGE → National Aviation Hall of Fame [0.0 mi] → U.S. Air Force Museum [0.0 mi] → Wright Brothers Aviation Center [NPS sym] [0.0 mi]
	Sign Face Direction	**Additional Commentary**	
	North	on exit ramp 15 of IR-675 north of Colonel Glenn Hwy	

Sign No.	Sign Type	Photo Link	Sign Copy
26	-DV1- Vehicular Directional (lg)	Refer to sign location plan for recommended sign location. See Photo 26.	→ National Aviation Hall of Fame → U.S. Air Force Museum → Wright Brothers Sites [NPS sym]
	Sign Face Direction	**Additional Commentary**	
	East	on Airway Road east of Harshman Road intersection	

Sign No.	Sign Type	Photo Link	Sign Copy
27	-DV1- Vehicular Directional (lg)	Refer to sign location plan for recommended sign location. No photo available.	↗ National Aviation Hall of Fame ↗ U.S. Air Force Museum ↗ Wright Brothers Sites [NPS sym]
	Sign Face Direction	**Additional Commentary**	
	South	on Harshman Road at Old Harshman intersection	

Sign No.	Sign Type	Photo Link	Sign Copy
28	-DV1- Vehicular Directional (lg)	Refer to sign location plan for recommended sign location. See Photo 28.	→ National Aviation Hall of Fame → U.S. Air Force Museum → Wright Brothers Sites [NPS sym]
	Sign Face Direction	**Additional Commentary**	
	South	on Harshman Rd south of Springfield Pike	

Sign No.	Sign Type	Photo Link	Sign Copy
28a	-DV1- Vehicular Directional (lg)	Refer to sign location plan for recommended sign location. No photo available.	← Dunbar House State Memorial [NPS sym] [0.0 mi] ← Wright Cycle Co. [NPS sym] [0.0 mi]
	Sign Face Direction	**Additional Commentary**	
	South	on Harshman Road south of Springfield Pike intersection	

Sign No.	Sign Type	Photo Link	Sign Copy
29	-DV1- Vehicular Directional (lg)	Refer to sign location plan for recommended sign location. See Photo 29.	↑ Huffman Prairie Flying Field [NPS sym] [0.0 mi] ↑ Huffman Prairie Flyind Field Visitor Center [NPS sym] [0.0 mi]
	Sign Face Direction	**Additional Commentary**	
	West	on Springfield Pike west of Air Force entrance	

Sign No.	Sign Type	Photo Link	Sign Copy
30	-DV1- Vehicular Directional (lg)	Refer to sign location plan for recommended sign location. See Photo 30.	← Wright Brothers Aviation Center [NPS sym] ← Wright Cycle Co. [NPS sym] → Huffman Prairie Flying Field [NPS sym]
	Sign Face Direction	**Additional Commentary**	
	South	on Air Force Entrance road before Springfield Pike intersection [This road is on the property of the Air Force base.]	

Sign No.	Sign Type	Photo Link	Sign Copy
31	-DV1- Vehicular Directional (lg)	Refer to sign location plan for recommended sign location. See Photo 31.	NOT FOR FABRICATION !!!-ODOT SIGNAGE ↑ Huffman Prairie Flying Field [NPS sym] [0.0 mi] ↑ Huffman Prairie Flying Field Visitor Center [NPS sym] ↑ Wright Memorial
	Sign Face Direction	**Additional Commentary**	
	East Face	On SR-44 4 eastbound east of Valley Pike/Springfield Pike intersection	

Sign No.	Sign Type	Photo Link	Sign Copy
32	-DV1- Vehicular Directional (lg)	Refer to sign location plan for recommended sign location. See Photo 32.	NOT FOR FABRICATION !!!-ODOT SIGNAGE ↑ National Aviation Hall of Fame ↑ U.S. Air Force Museum ↑ Wright Brothers Aviation Center [NPS sym]
	Sign Face Direction	**Additional Commentary**	
	East	On SR-444 westbound east of Valley Pike/Springfield Pike intersection	

Sign No.	Sign Type	Photo Link	Sign Copy
33	-DV1- Vehicular Directional (lg)	Refer to sign location plan for recommended sign location. See Photo 33.	NOT FOR FABRICATION !!!-ODOT SIGNAGE ← Huffman Prairie Flying Field Visitor Center [NPS sym] ← Wright Memorial ↑ National Aviation Hall of Fame [0.0 mi]
	Sign Face Direction	**Additional Commentary**	
	East	on SR-444 westbound east of Old Route 4	

Sign No.	Sign Type	Photo Link	Sign Copy
34	-DV1- Vehicular Directional (lg)	Refer to sign location plan for recommended sign location. See Photo 34.	← Wright Cycle Co. [NPS sym] [0.0 mi] → Huffman Prairie Flying Field [NPS sym][0.0 mi]
	Sign Face Direction	**Additional Commentary**	
	West	on Old Route 4 south of S-444 intersection	

Sign No.	Sign Type	Photo Link	Sign Copy
35	-DV1- Vehicular Directional (lg)	Refer to sign location plan for recommended sign location. See Photo 35.	→ Huffman Prairie Flying Field Visitor Center [NPS sym] → Wright Memorial
	Sign Face Direction	**Additional Commentary**	
	North Face	on Old Route 4 outside entrance to Huffman Prairie Visitor Center and Wright Memorial	

Sign No.	Sign Type	Photo Link	Sign Copy
36	-DV1- Vehicular Directional (lg)	Refer to sign location plan for recommended sign location. See Photo 36.	NOT FOR FABRICATION !!!-ODOT SIGNAGE ← Huffman Prairie Flying Field [NPS sym] [0.0 mi]
	Sign Face Direction	**Additional Commentary**	
	West	on SR-444 eastbound west of Huffman Prairie Flying Field entrance	

Sign No.	Sign Type	Photo Link	Sign Copy
37	-DV1- Vehicular Directional (lg)	Refer to sign location plan for recommended sign location. See Photo 37.	NOT FOR FABRICATION !!!-ODOT SIGNAGE → Huffman Prairie Flying Field [NPS sym] [0.0 mi] ↑ National Aviation Hall of Fame [0.0 mi] ↑ U.S. Air Force Museum [0.0 mi]
	Sign Face Direction	**Additional Commentary**	
	East	on SR-444 westbound east of Huffman Prairie Flying Field entrance	

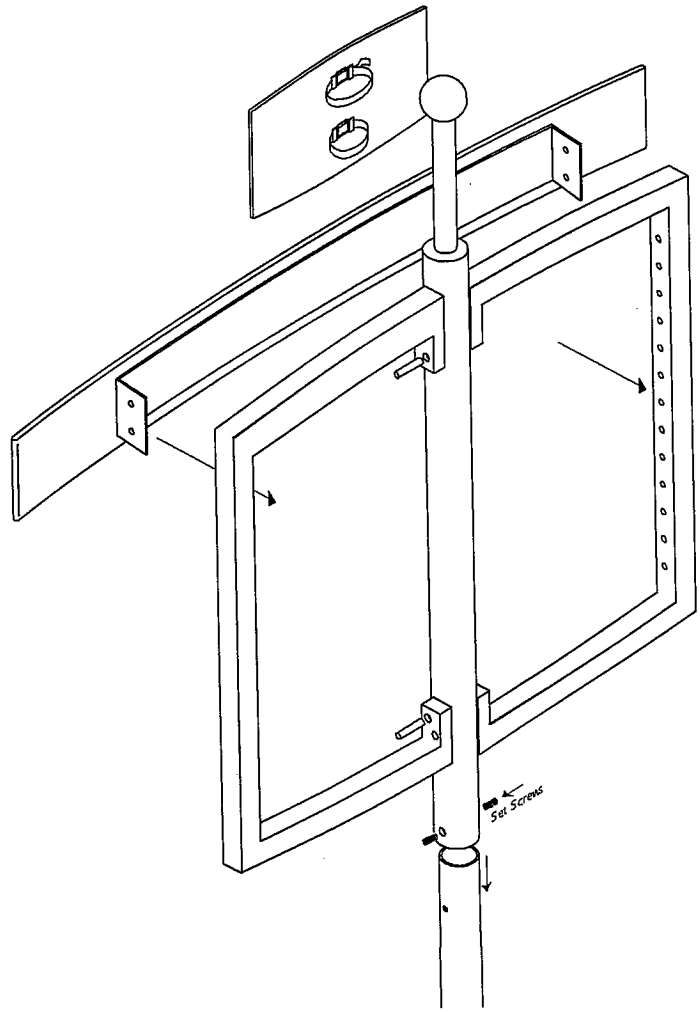

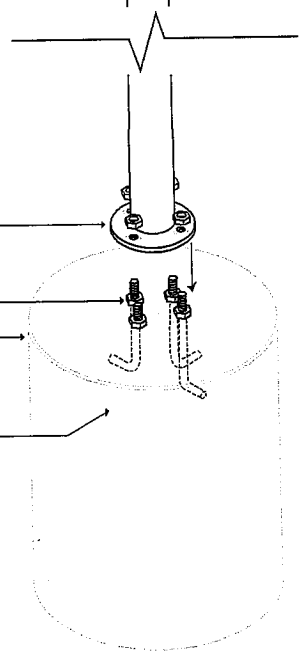

Flange is at grade with appropriate breakaway.

Double leveling nuts per Fabricator's spec attached above and below pole's base flange to threads of embedded "J" anchor bolts.

3000 psi concrete foundation cylinder. Footing diameter and depth determined by engineer

A307 Galvanized "J" Anchor Bolt.
‡ diameter, 3" thread length, 8" tall, 6" foot.
Same for all Sign Types except sidewalk installation.
All to be embedded up to start of threads.

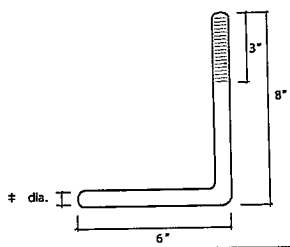

CONTACT NOTE:
for questions regarding design intent, please contact Corbin,
ph 231.947.1236 x3018

Montgomery County National Park Service Dayton/ Montgomery County Convention & Visitors Bureau, Inc. Dayton, Ohio	corbin 109 East Front 304 Traverse City, MI 49684 231 947.1236	SCALE: NOT TO SCALE		1	02.14.03	Design Intent	Footing Detail ground

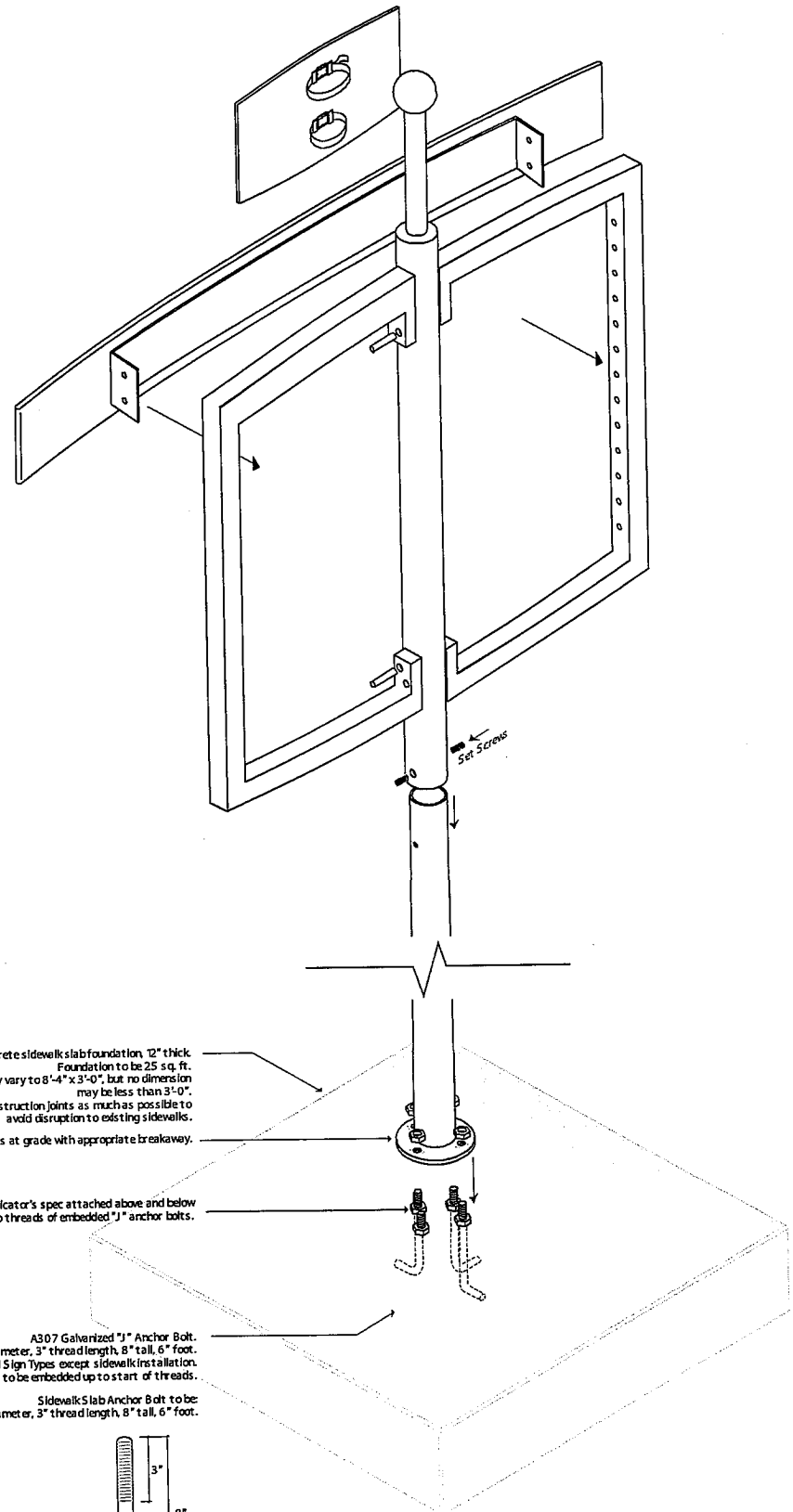

3000 psi concrete sidewalk slab foundation, 12" thick.
Foundation to be 25 sq. ft.
5'-0" x 5'-0" is ideal, but size may vary to 8'-4" x 3'-0", but no dimension may be less than 3'-0".
Observe location of existing construction joints as much as possible to avoid disruption to existing sidewalks.

Flange is at grade with appropriate breakaway.

Double leveling nuts per Fabricator's spec attached above and below pole's base flange to threads of embedded "J" anchor bolts.

A307 Galvanized "J" Anchor Bolt.
‡ diameter, 3" thread length, 8" tall, 6" foot.
Same for all Sign Types except sidewalk installation.
All to be embedded up to start of threads.

Sidewalk Slab Anchor Bolt to be:
A307 Galvanized, ‡ diameter, 3" thread length, 8" tall, 6" foot.

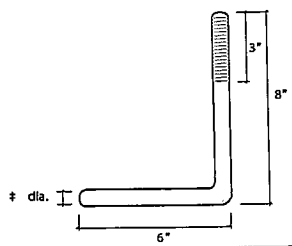

CONTACT NOTE:
for questions regarding design intent, please contact Corbin,
ph 231.947.1236 x3018

Montgomery County		Date	Issue Date	Revision	Date	Notes	Maintenance
Montgomery County National Park Service Dayton/ Montgomery County Convention & Visitors Bureau, Inc. Dayton, Ohio	corbin 109 East Front 304 Traverse City, MI 49684 231 947.1236	SCALE: NOT TO SCALE		1	02.14.03	Design Intent	Footing Detail sidewalk

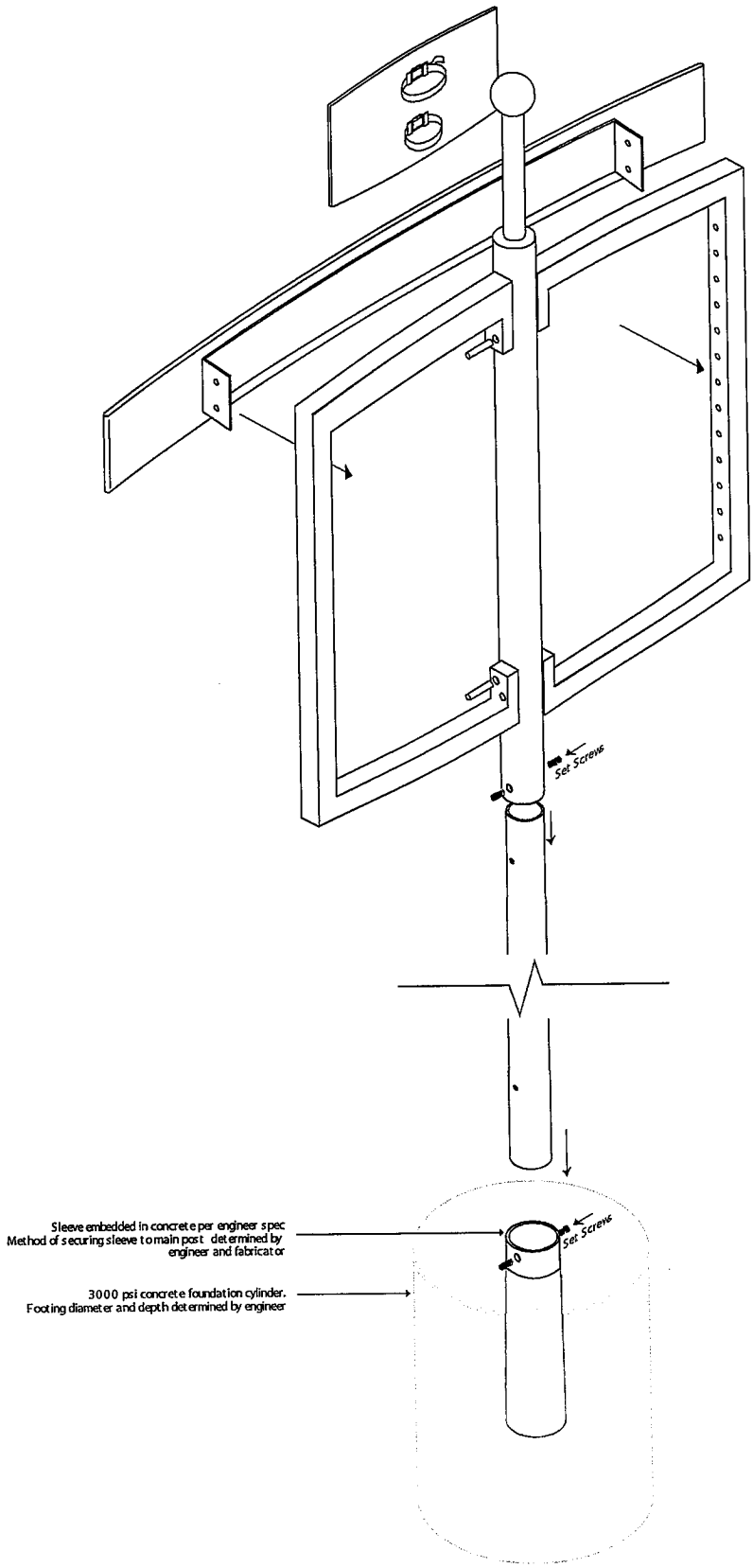

CONTACT NOTE:
for questions regarding design intent, please contact Corbin,
ph 231.947.1236 x3018

Montgomery County National Park Service Dayton/ Montgomery County Convention & Visitors Bureau, Inc. Dayton, Ohio	corbin 109 East Front 304 Traverse City, MI 49684 231 947.1236	SCALE: NOT TO SCALE		1	02.18.03	Design Intent	Footing Detail sleeve