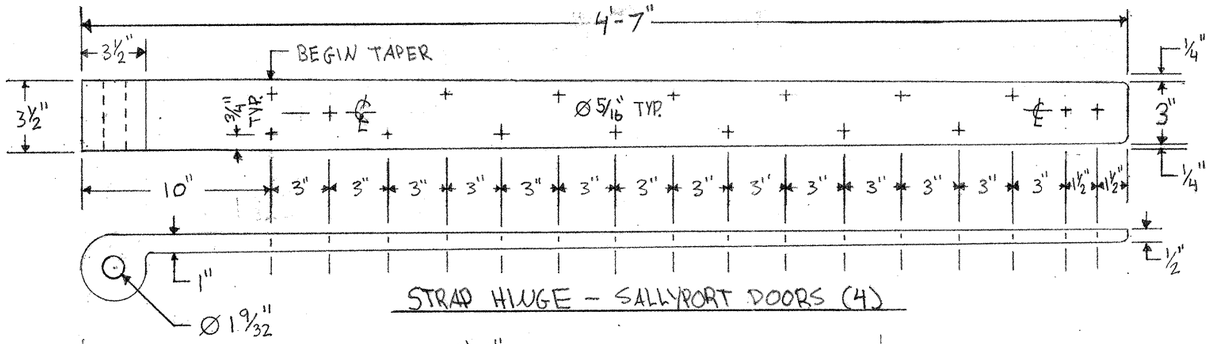

STRAP HINGE - SALLYPORT DOORS (4)

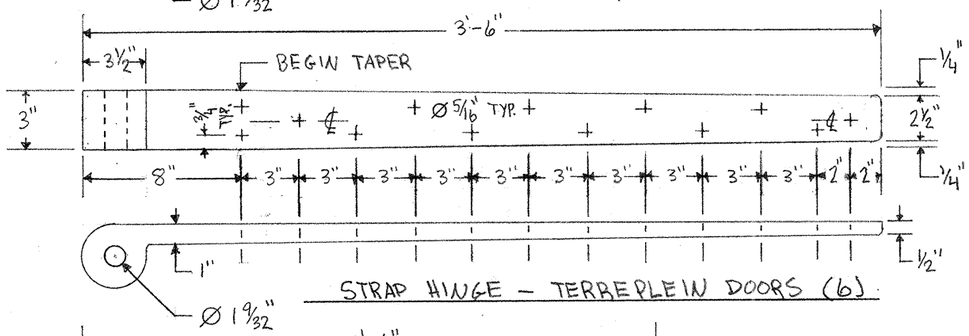

STRAP HINGE - TERREPLEIN DOORS (6)

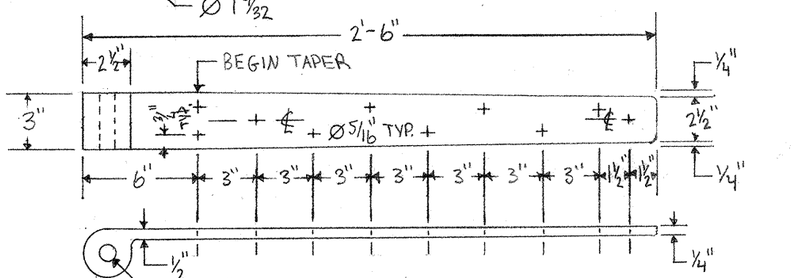

STRAP HINGE - EMBRASURE SHUTTERS (8)

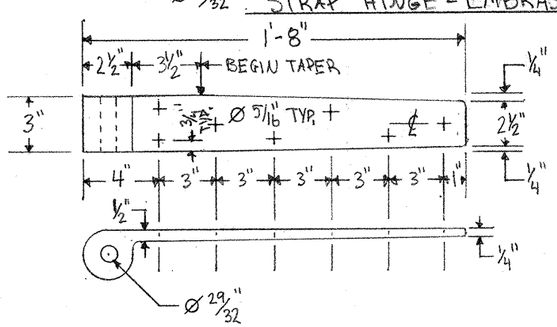

STRAP HINGE - CASEMATE SHUTTERS (16)

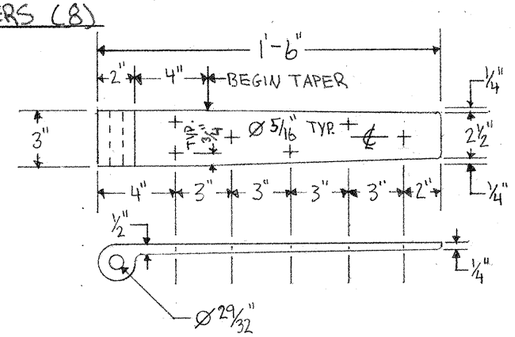

STRAP HINGE - WICKET DOOR (2)

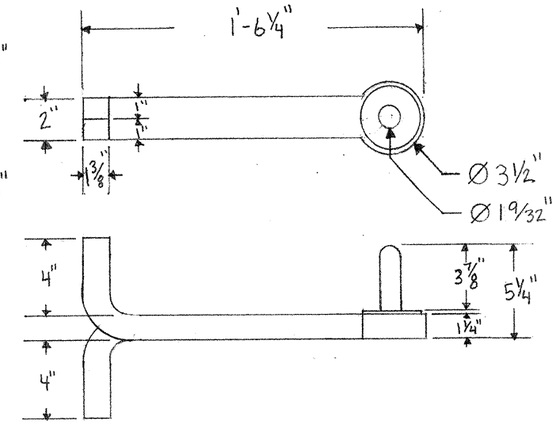

EXISTING PINTEL - N.I.C.

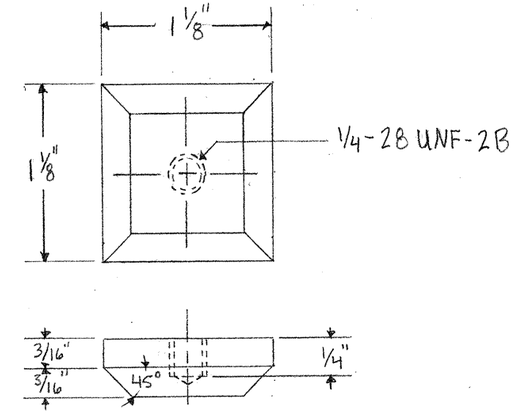

RIVET HEAD (1,400)

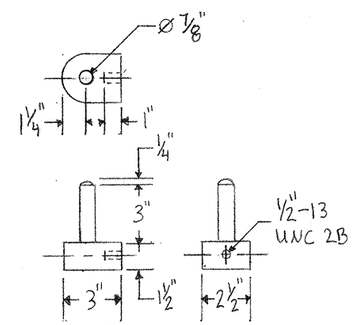

CASEMATE PINTEL (16)

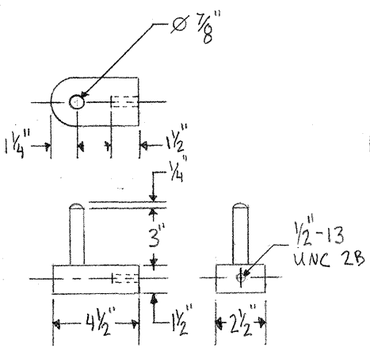

EMBRASURE PINTEL (8)

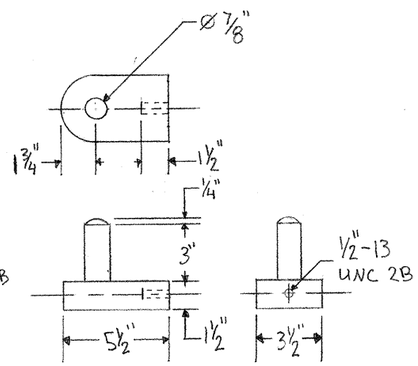

TERREPLEIN PINTEL (6)

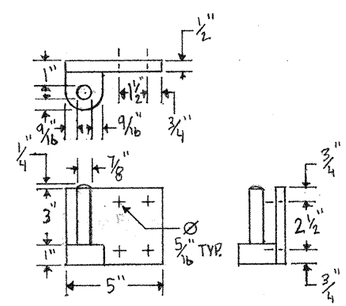

WICKET PINTEL (2)

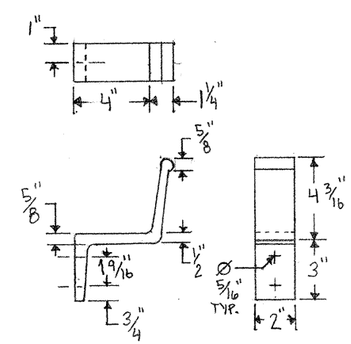

BAR LOCKING BRACKET (6)

NATIONAL PARK SERVICE HISTORIC PRESERVATION TRAINING CENTER	FORT MASSACHUSETTS GULF ISLANDS NATIONAL SEASHORE	DR BY: GORDON CK BY: MCGUIGAN	SCALE: 1½" = 1'-0" DATE: 04-21-09	DRAWING NO: 4