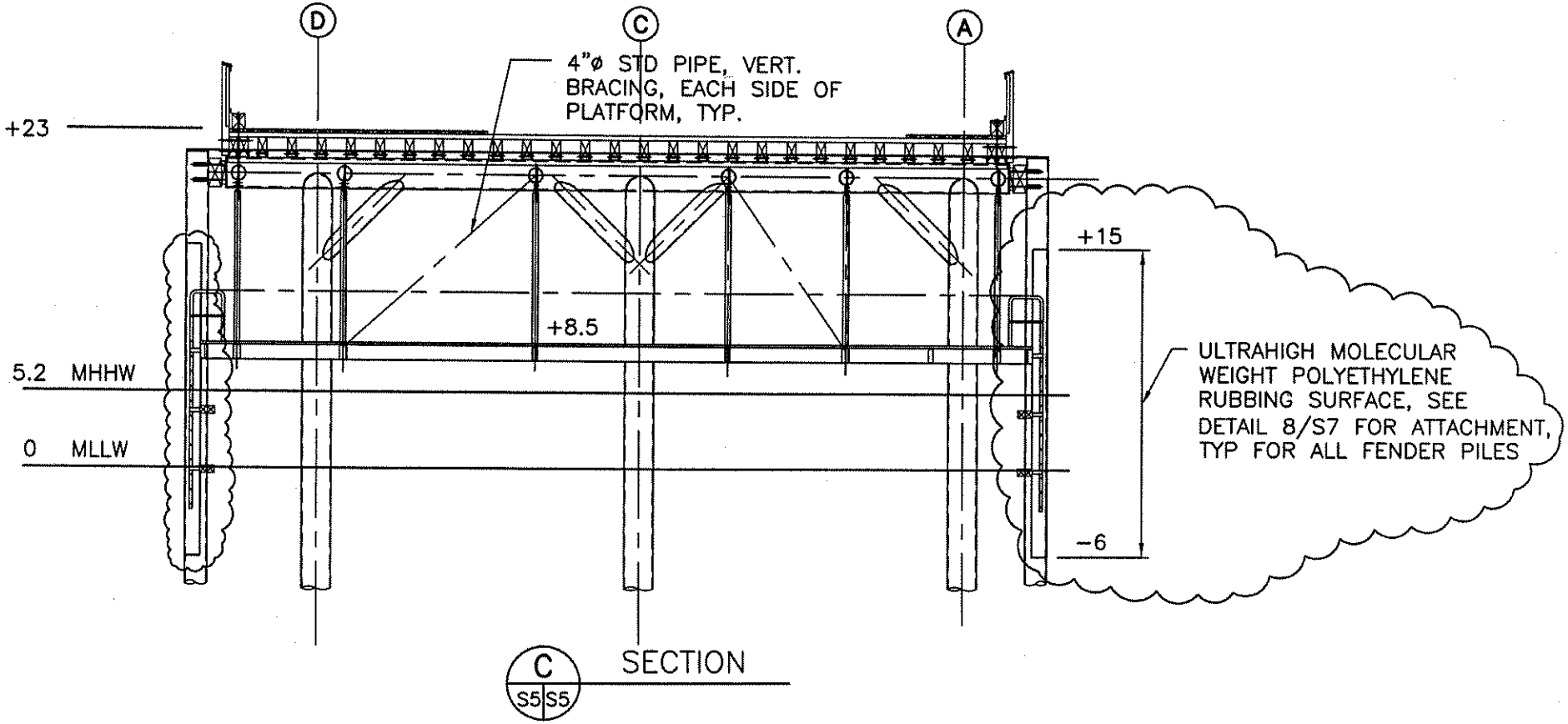


CHIS 006226

Solicitation No. N2011080686

Amendment No. 002

Drawing Revisions

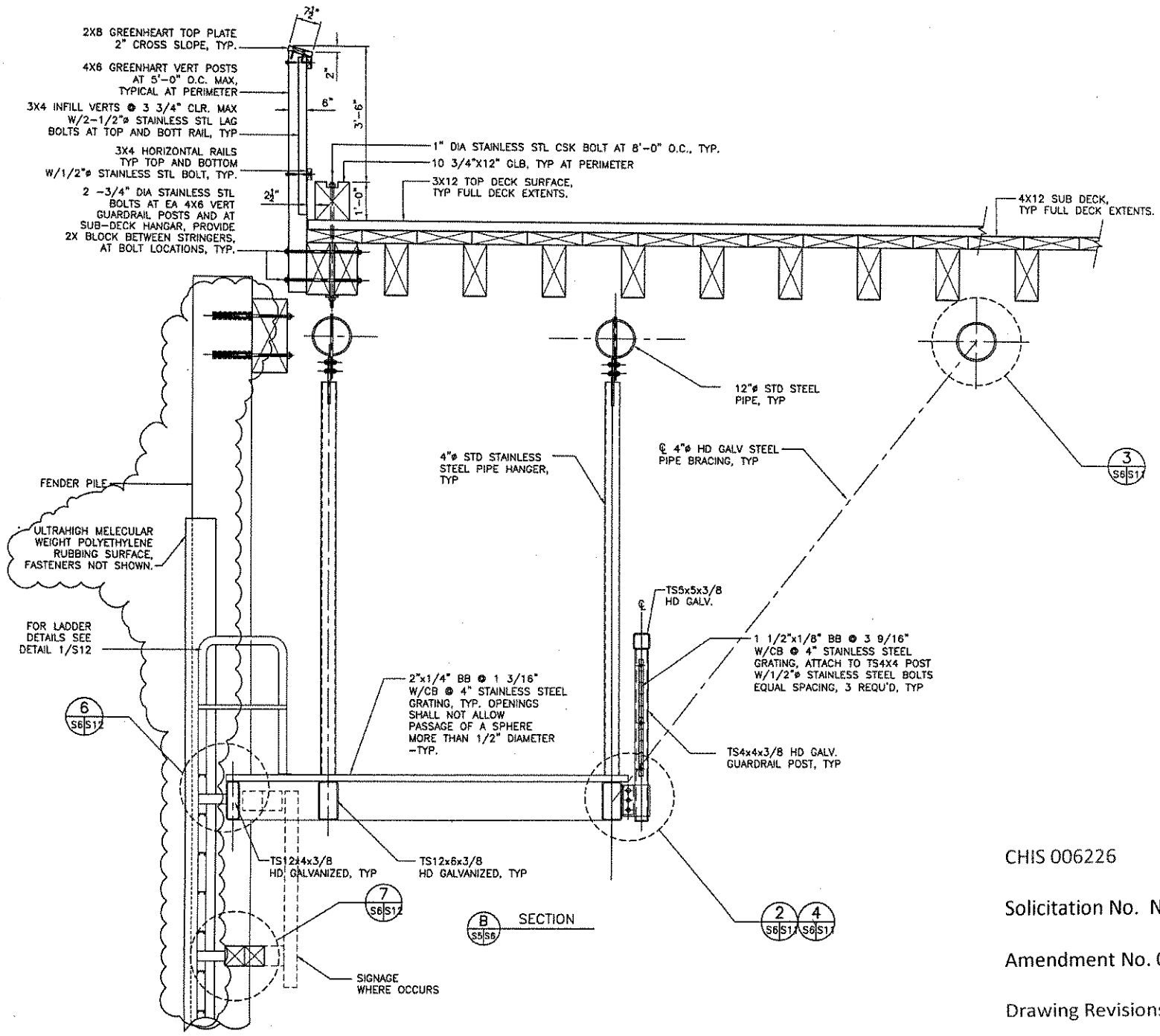


CHIS 006226

Solicitation No. N2011080686

Amendment No. 002

Drawing Revisions

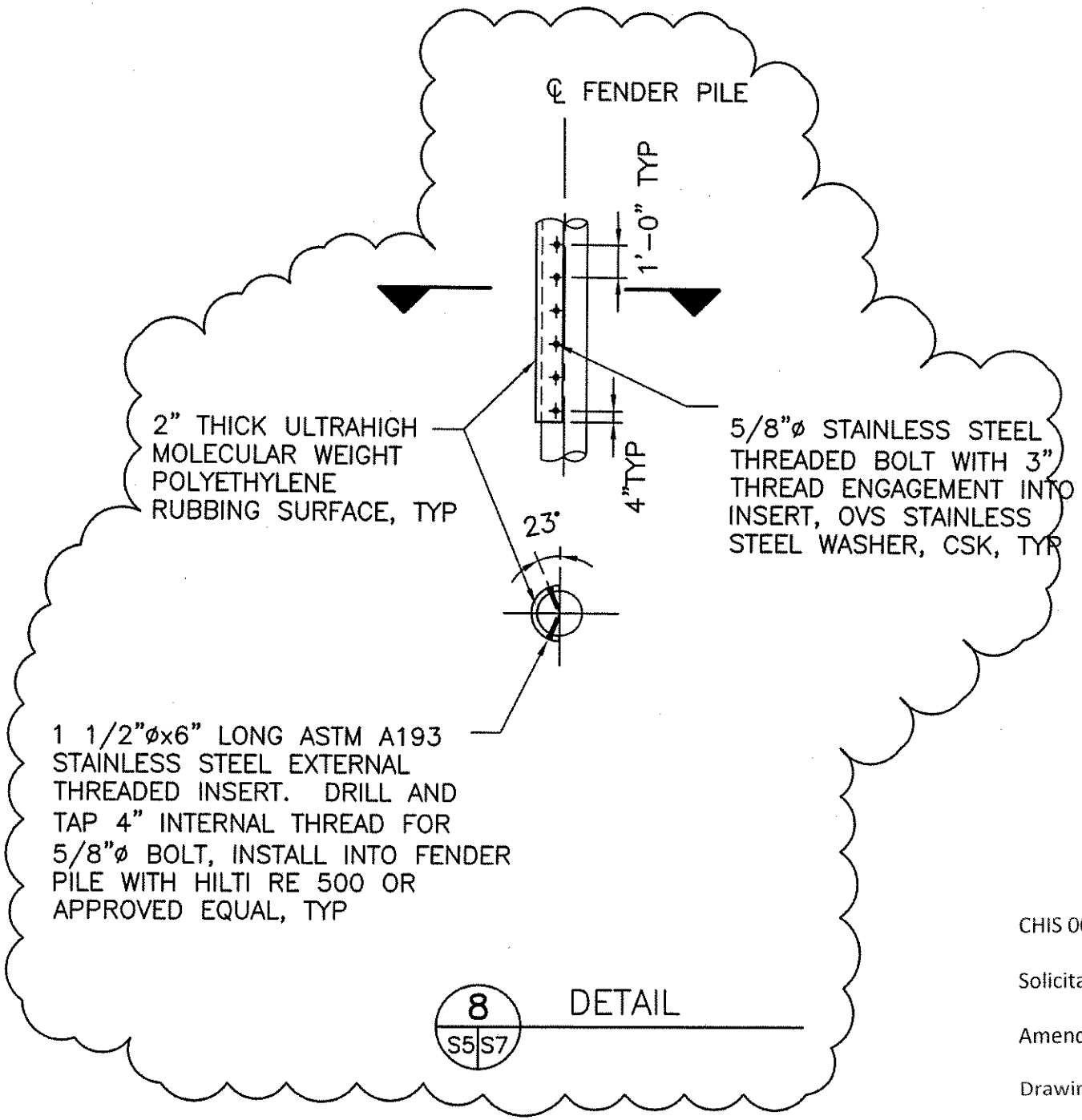


CHIS 006226

Solicitation No. N2011080686

Amendment No. 002

Drawing Revisions

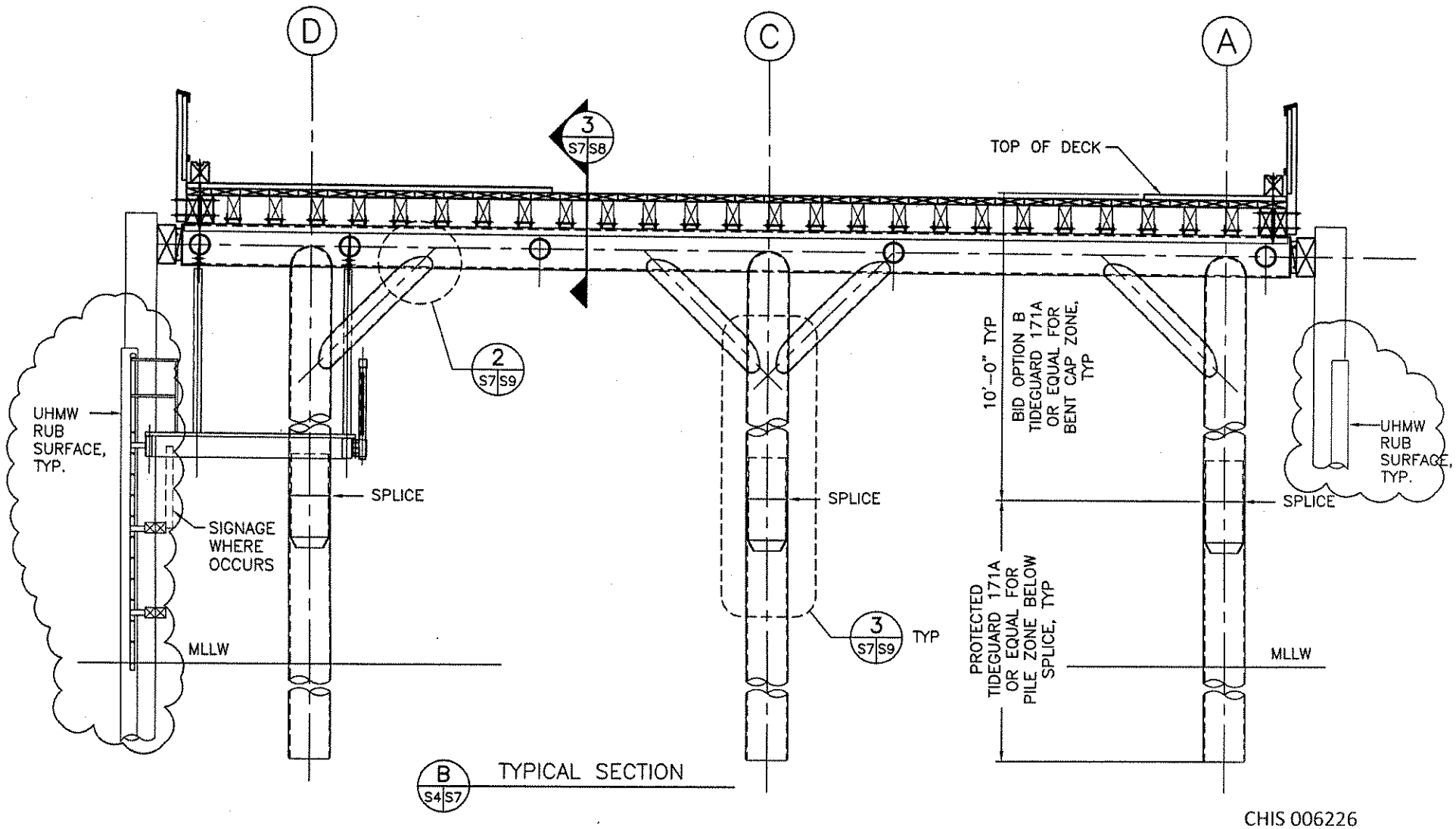


CHIS 006226

Solicitation No. N2011080686

Amendment No. 002

Drawing Revisions

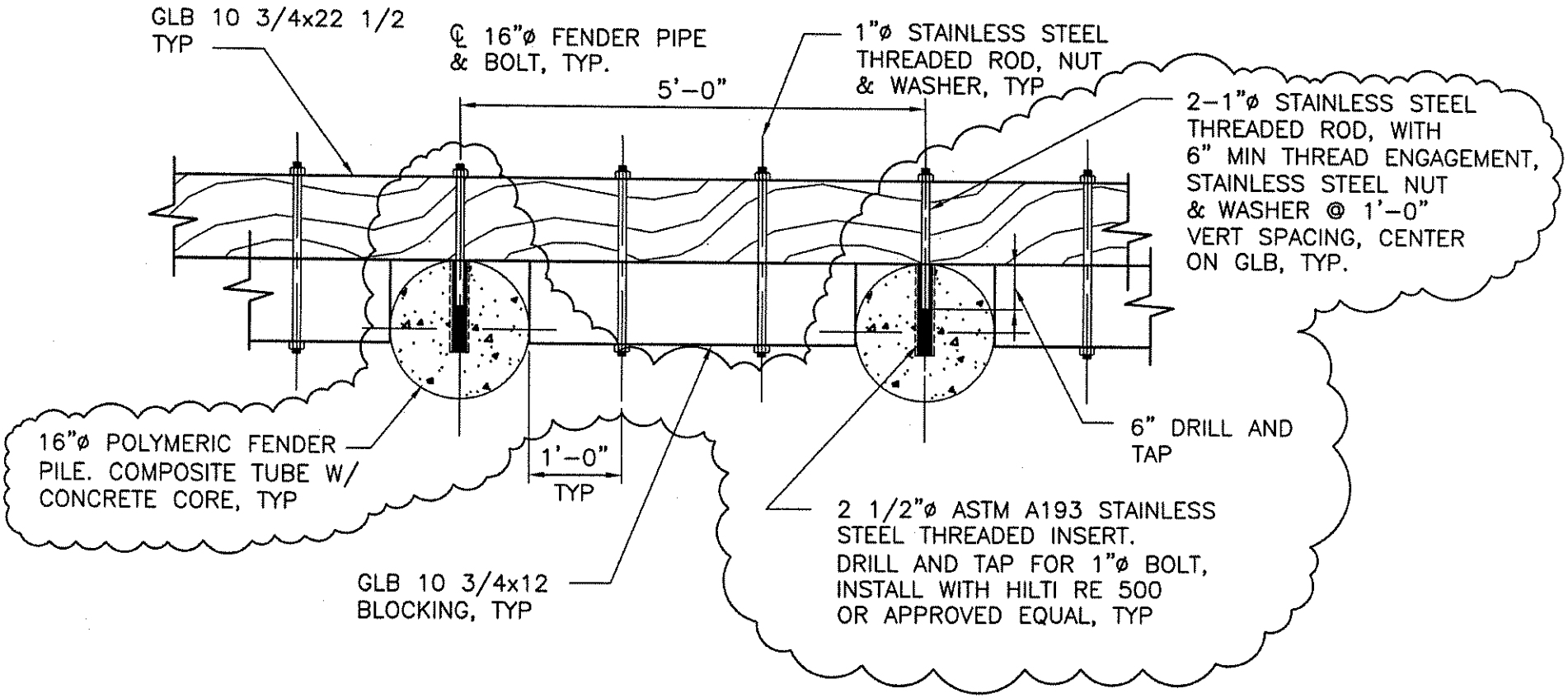


2 S4 S8 FENDER PILE TO GLB CONNECTION

CHIS 006226

Solicitation No. N2011080686

Amendment No. 002

Drawing Revisions

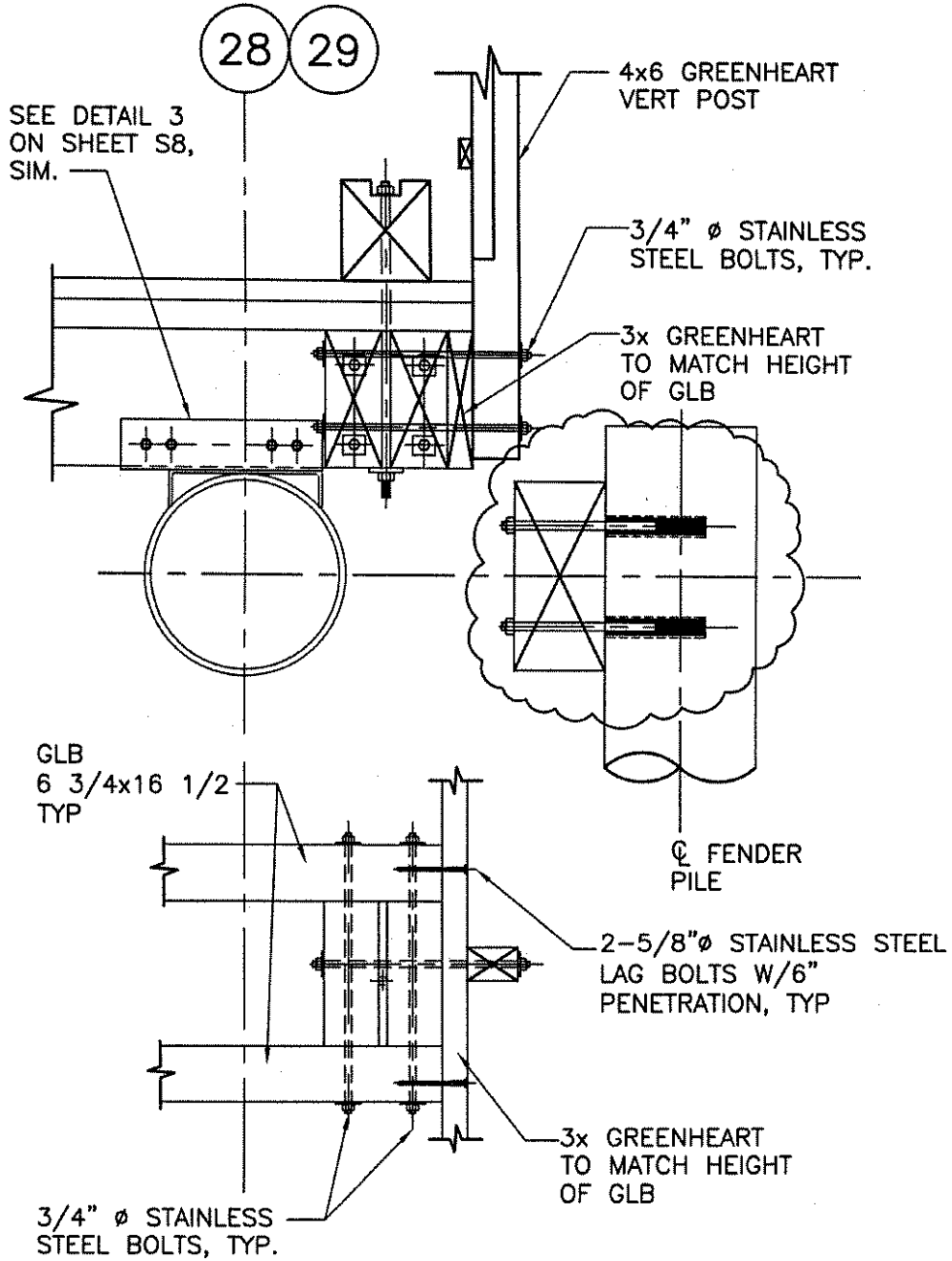


5 S5 S8 DETAIL

CHIS 006226

Solicitation No. N2011080686

Amendment No. 002

Drawing Revisions

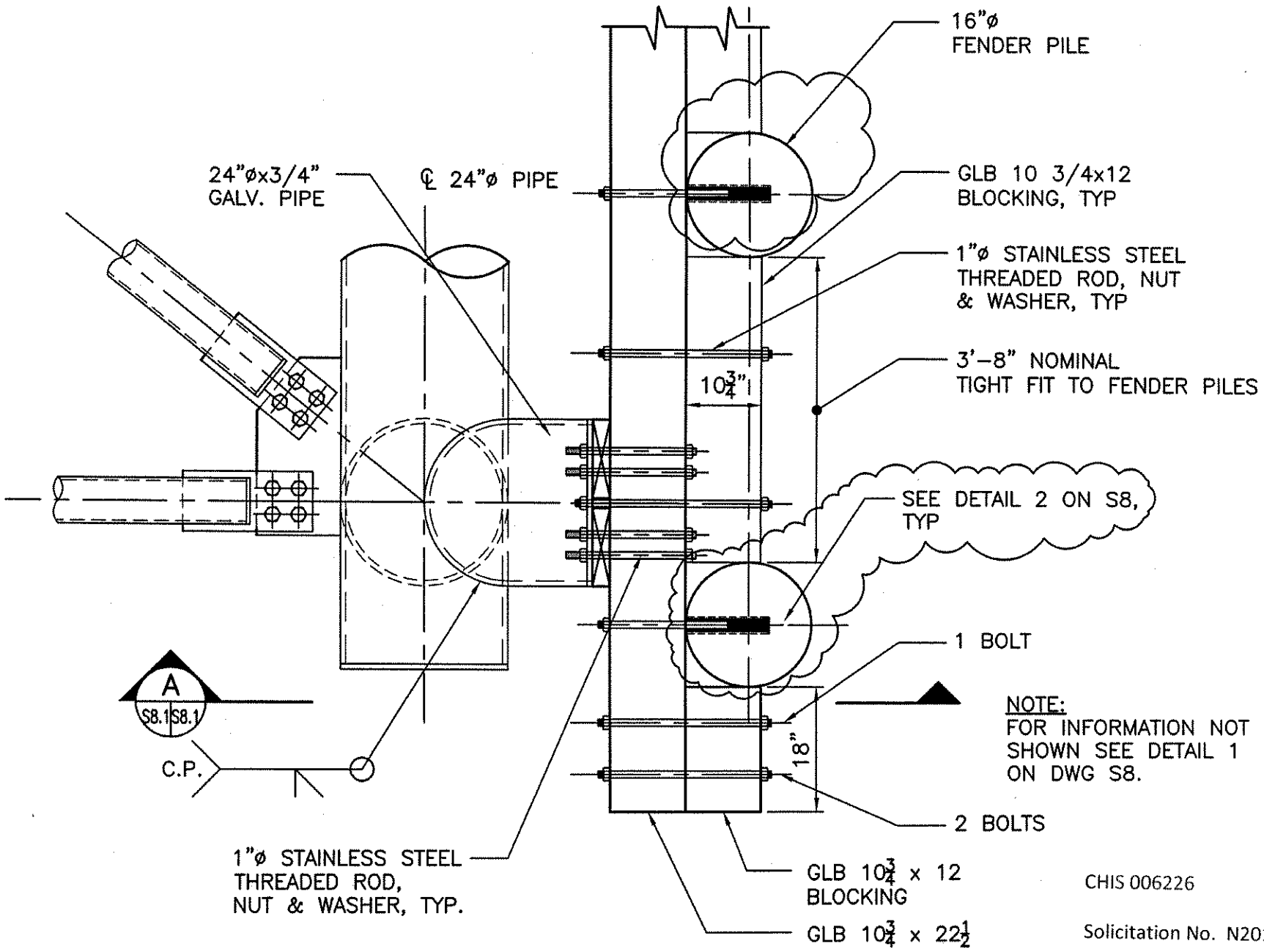


5 DETAIL
S4 S8.1

CHIS 006226

Solicitation No. N2011080686

Amendment No. 002

Drawing Revisions

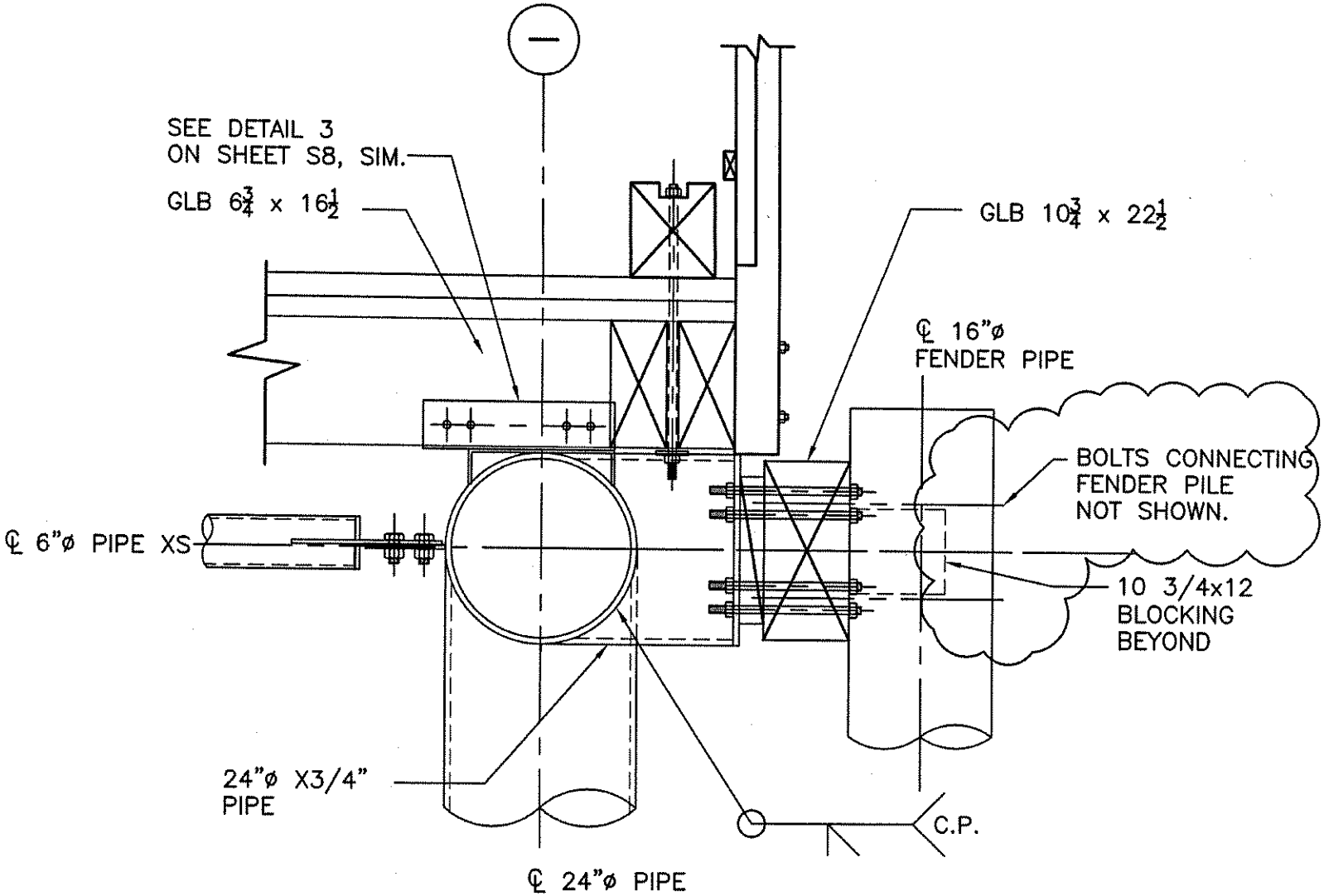


A
S8.1 S8.1
SECTION

CHIS 006226

Solicitation No. N2011080686

Amendment No. 002

Drawing Revisions

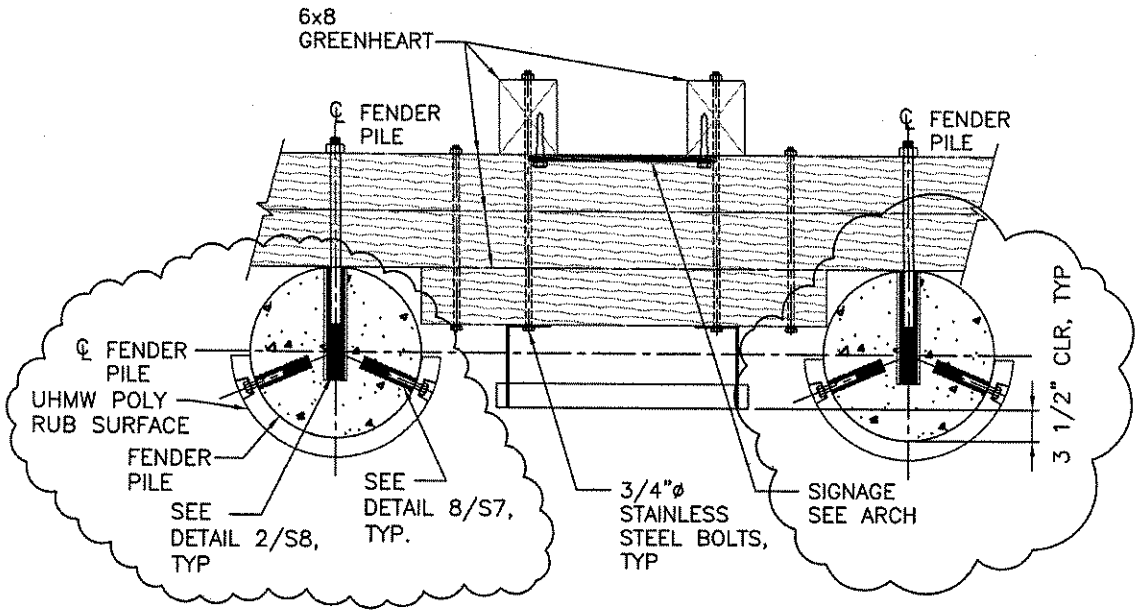


CASE 1, NO SIGNAGE

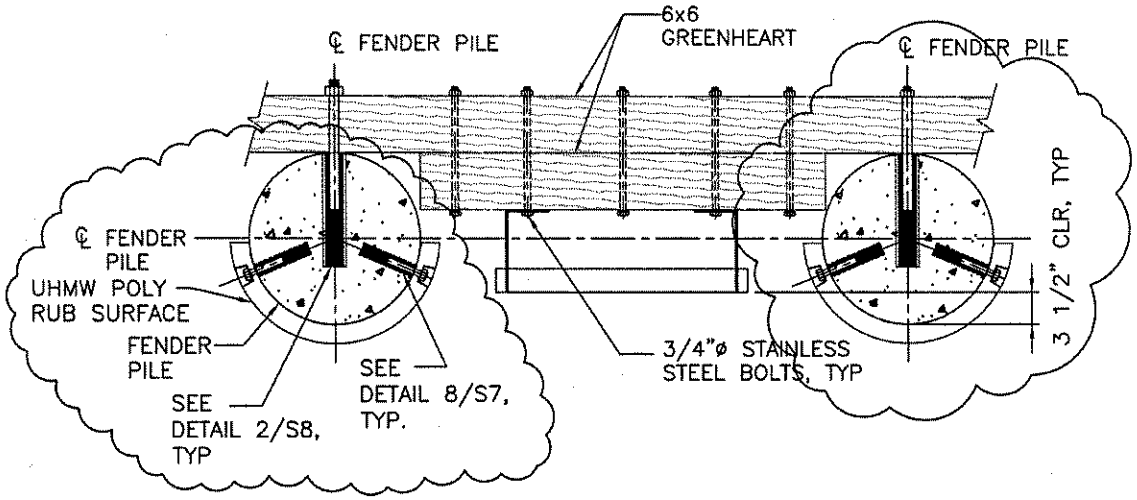


CASE 2, WITH SIGNAGE

B
S12 S12
DETAIL

CHIS 006226

Solicitation No. N2011080686

Amendment No. 002

Drawing Revisions